KACMAZLAR®
GEAR INDUSTRY

ZF GEARBOX GROUP 20

6 S 850
6 S 1550
6 S 1600-1700-1900
6 S 1601-1701-1901
8 S 180
9 S 75
9 S 109
9 S 1110-1111-1115
9 S 1310-1311-1315
16 S 109

ECOSPLIT I

16 S 130-130/1
16 S 160-160/1
16 S 190-190/1

ECOSPLIT II

16 S 150
16 S 220
16 S 220A

ECOSPLIT III
NEW ECOSPLIT

16 S 151
16 S 181
16 S 221
16 S 251

ECOSPLIT IV

16 SPEEDS

AS TRONIC

12 AS TRONIC
16 AS TRONIC

CATALOGUE 2018 - 2019

KAÇMAZLAR Otomotiv Ltd. Şti, Türkiye'de ve Dünyada otomotiv endüstrisine hizmet vermek ve Türk sanayisinin dünya pazarlarında yer alabilmesi amacıyla bir aile şirketi olarak 1987 yılında Konya'da kurulmuştur.

KAÇMAZLAR Otomotiv Ltd. Şti, kuruluşundan bugüne geldiğinde ağır iş makinaları, kamyonlar, tırlar ve otobüsler olmak üzere VOLVO, SCANIA, MERCEDES, ZF, RENAULT, DAF, MAN, FORD, BMC, HINO, IVECO, KAMAZ ve MAZ marka araçlara ait şanzıman, diferansiyel ve aktarma dişlilerini üreterek 30 yıllık tecrübenin ve dünya markası olmanın gururunu yaşamaktadır.

30. yılında, KAÇMAZLAR Otomotiv'in üstün başarılarında emeği geçen tüm çalışanlarına ve müşterilerine, şirket kurucuları olan Seyit KAÇMAZ, Mehmet KAÇMAZ ve Hüseyin KAÇMAZ sonsuz teşekkürlerini sunarlar.

KAÇMAZLAR Otomotiv bugüne kadar olduğu gibi, bundan sonra da gücüne güç katmak ve müşterilerine daha iyi hizmet sunabilmek için çok daha iyi gelişmelere imza atacak Kaçmazlar ailesinin genç ve dinamik bireylerinin de iş hayatına atılmalarıyla, 30.000 m² 'den 115.000 m²'ye arttırılan çalışma alanında teknolojik yatırımlarla yükselen gelişimini sürdürmektedir.

KACMAZLAR Automotive Co. has been established as a family company with the aim of serving the domestic and international automotive industry and Turkish Industry's taking its place in the world markets, in Konya / TURKEY in 1987.

KACMAZLAR Automotive is proud of having 30 years of experience & being a world-brand by its production of gears of the gearboxes, differentials and transmissions particularly on heavy duty vehicles, trucks, trailer trucks and buses branded VOLVO, SCANIA, MERCEDES, ZF, RENAULT, DAF, MAN, FORD, BMC, HINO, IVECO, KAMAZ & MAZ, since its foundation.

In the 30th anniversary, founders of the company Seyit KACMAZ, Mehmet KACMAZ and Hüseyin KACMAZ presents their endless gratitude to all of its employees and customers who have a great effort in the over standing success of the KACMAZLAR Automotive.

As it has been by this time, KACMAZLAR Automotive is being maintained its development that increasing with technological investments in extended working place from 30.000 m² to 115.000 m² to gain more strength and also to be able to provide a better service for its customers by the getting a start in their business lives of the young & dynamic members of the KACMAZLAR Family whom might be put their signature under much more better developments.

KACMAZLAR Automotive Co fue fundada como una empresa familiar en Konya / TURQUÍA en 1987, con el objetivo de servir a la industria automotriz nacional e internacional, y con el fin qué la industria turca tenga un lugar en el mercado mundial.

KACMAZLAR Automotive se enorgullece de tener 30 años de experiencia y ser una marca mundial por su producción de engranajes, diferenciales y transmisiones especialmente para vehículos pesados, como camiones, remolques y autobuses de marca VOLVO, SCANIA, MERCEDES, ZF, RENAULT, DAF, MAN, FORD, BMC, HINO, IVECO, KAMAZ y MAZ, desde su fundación.

En el 30° aniversario, los fundadores de la empresa Seyit KACMAZ, Mehmet KACMAZ y Hüseyin KACMAZ presentan su infinita gratitud a todos sus empleados y clientes que tienen un gran esfuerzo en el logro excepcional de la KACMAZLAR Automotive.

Como ha sido hasta hoy, KACMAZLAR Automotive se está manteniendo su desarrollo en aumenta con inversiones tecnológicas en un lugar de trabajo ampliado de 30.000 m² a 115.000 m² para ganar más fuerza y también poder prestar un mejor servicio a sus clientes, y también con la participación de los miembros jóvenes y dinámicos de la Familia KACMAZLAR en la vida de negocios, los que podrían poner sus firmas en desarrollos mucho más mejores.

KACMAZLAR Automotive Co была основана в Конье, Турция в 1987 г. как семейная компания с целью обслуживания отечественной и международной автомобильной промышленности, а Турецкая промышленность заняла свое место на мировых рынках.

KACMAZLAR Automotive гордится тем, что обладает 30-летним опытом и является мировым брендом благодаря производству шестерен, редукторов, дифференциалов и трансмиссий, в частности, на тяжелые грузовые автомобили, грузовики, прицепы и автобусы под маркой VOLVO, SCANIA, MERCEDES, ZF, RENAULT, DAF, MAN, FORD, BMC, HINO, IVECO, КАМАЗ и МАЗ, с момента его основания.

В 30-летнюю годовщину основатели компании Сеит КАЧМАЗ, Мехмет КАЧМАЗ и Хусейн КАЧМАЗ представляют свою бесконечную благодарность всем своим сотрудникам и клиентам, которые прилагают большие усилия для достижения успеха KACMAZLAR Automotive.

Благодаря технологическим инвестициям KACMAZLAR Automotive на данный момент продолжает развиваться. Мы расширяем и увеличиваем рабочее пространство с 30 000 м² до 115 000 м², для получения больших мощностей. Мы имеем возможность предоставлять лучший сервис для своих клиентов, для начала их карьеры в деловой жизни молодых и динамичных членов семьи KACMAZLAR, которые могут поставить свою подпись под гораздо лучшими разработками.

تأسست شركة كاشمازلار لصناعة قطع السيارات في العام 1987 كشركة عائلية في مدينة قونيا في تركيا بهدف خدمة صناعة قطع غيار السيارات المحلية والدولية، وايضا لكي تحتل الصناعة التركية مكانها في الأسواق العالمية.

شركة كاشمازلار لصناعة قطع السيارات ومنذ تأسيسها الى يومنا هذا لهي فخورة بأن لديها 30 عاما من الخبرة في هذا المجال وكونها اصبحت علامة تجارية عالمية من خلال تنوع إنتاجها من التروس و علب التروس، التروس التفاضلية (دفرنسيال) للمركبات الثقيلة والشاحنات والشاحنات المقطورة وحافلات النقل وخاصة لموديلات فولفو، سكانيا، مرسيدس، زد اف، رينو ، داف، مان، فورد، بي ام جي، هينو، إيفيكو، كماز و ماز.

في الذكرى ال 30 لتأسيس الشركة ، يود مؤسسي الشركة السيد سيت كشماز،السيد محمد كاشماز والسيد حسين كاشماز ان يعبروا عن شكرهم و امتنانهم المطلق لجميع موظفيها وعملائها الذين كانوا وما زالوا لهم الاثر الكبير في النجاح المتميز لشركة كاشمازلار لصناعة قطع السيارات.

كما هو الحال منذ اليوم الاول وحتي هذا اليوم،فانه تم الحفاظ على تطور الشركة من خلال زيادة الاستثمارات التكنولوجية والمكائن الحديثة وكذلك الاستثمار في توسعة المصنع من 30.000 متر مربع إلى 115.000 متر مربع. وكذلك بدا جيل من شباب عائلة كاشمازلار لتسلم العمل وادارة المصنع لكسب المزيد من القوة والطاقة في الانتاج والمضي قدما نحو الاهداف المرسومة وأيضا لتكون قادرة على تقديم خدمة مميزة لعملائها الكرام

شرکت خودروسازی و تجارت محدود کاچمازلار (KAÇMAZLAR) در سال 1987 در شهر قونیه ترکیه به عنوان یک شرکت خانوادگی برای خدمت به صنعت خودرو در ترکیه و جهان تاسیس شد تا صنعت ترکیه را در بازارهای جهانی فعال کند.

شرکت خودروسازی و تجارت محدود کاچمازلار (KAÇMAZLAR) افتخار 30 سال تجربه و برند جهانی بودن را از زمان تاسیس تا به امروز در تولید ماشین آلات کار، کامیون ها، تیرها و اتوبوس ها از جمله گیرباکس و دیفرانسیل و انتقال دنده های متعلق به برندهای وسایل نقلیه VOLVO, SCANIA, MERCEDES, ZF, RENAULT, DAF, MAN, FORD, BMC, HINO, IVECO, KAMAZ, MAZ میکند.

در30 سالگی شرکت خودروسازی کاچمازلار (KAÇMAZLAR) از تمام کارکنان و مشتری ها که در موفقیت شرکت تلاش کرده اند از جمله آقای سید کاچماز و آقای محمد کاچماز و آقای حسین کاچماز که بنیان بنیانگذاران شرکت هستند، تشکر فراوان عرض میکنند.

شرکت خودروسازی کاچمازلار (KAÇMAZLAR) همانطور که تا به امروز بوده خودروها پیشرفت بسیار خوبی را به منظور تقویت قدرت و ارائه خدمات بهتر به مشتریان خود و برای پیشرفتهای بهتر انجام خواهد داد. اعضای خوانواده و جوانان پویای کاچمازلار (KAÇMAZLAR) با وارد شدن به دنیای تجارت با سرمایه گذاری های تکنولوژیکی خود در زمینه کاری، که از 30000 متر مربع تا 115000 متر مربع افزایش یافته است، توسعه خود را در حال ادامه دادن هستند.

KAÇMAZLAR Manufacturing Plant

LIEBHERR
LC S 300
14-01-05

Certificate

Standard **ISO 9001:2008**

Certificate Registr. No. 01 100 1615906

Certificate Holder: KAÇMAZLAR GEAR INDUSTRY

KAÇMAZLAR OTOMOTİV TİCARET VE SANAYİ LTD. ŞTİ.

3. ORGANİZE SANAYİ BÖLGESİ İHSANDEDE CAD. 9. SOKAK NO:25 SELÇUKLU /KONYA-TURKEY

Scope: Manufacturing, heat treatment and sales of automative spare parts (engine, gearbox, power, transmission)

Proof has been furnished by means of an audit that the requirements of ISO 9001:2008 are met.

Validity: The certificate is valid from 2017-01-17 until 2018-09-14.
First certification 2005

2017-01-18

TÜV Rheinland Cert GmbH
Am Grauen Stein · 51105 Köln

DAkkS
Deutsche Akkreditierungsstelle
D-ZM-16031-01-00

www.tuv.com

TÜVRheinland®
Precisely Right.

CONTENTS

GROUP NO	DESCRIPTION / TANIM	SAYFA/PAGES
	6 S 850	**01 - 06**
	6 S 1550	**07 - 12**
	6 S 1600-1601-1700-1701-1900-1901 BD IT / BO IT	**13 - 20**
	8 S 180	**21 - 36**
	9 S 75	**37 - 48**
	9 S 109	**49 - 70**
	9 S 1110 - 1111 - 1115 -1310 - 1311 - 1315	**71 - 86**
	16 S 109	**87 - 114**
ECOSPLIT I		
	16 S 130	**115 - 130**
	16 S 130/1	**131 - 144**
	16 S 160	**145 - 158**
	16 S 160/1	**159 - 172**
	16 S 190	**173 - 188**
	16 S 190/1	**189 - 204**
ECOSPLIT II		
	16 S 150	**205 - 220**
	16 S 220	**221 - 238**
	16 S 220 A	**239 - 252**
ECOSPLIT III / NEW ECOSPLIT		
	16 S 151 OLD	**253 - 269**
	16 S 151 NEW	**270 - 293**
	16 S 181	**294 - 310**
	16 S 221 OLD	**311 - 327**
	16 S 221 NEW	**328 - 350**
	16 S 251 - 16 S 2723 TO - 16 S 2725 TO	**351 - 367**
ECOSPLIT IV		
	16 SPEEDS	**368 - 387**
AS TRONIC		
	12 AS TRONIC	**388 - 399**
	16 AS TRONIC	**401 - 410**
	SHIFT CONTROL TOWER	**411**

Original parts names, oem numbers, symbols and descriptions used in this catalogue are for reference purposes only.

OEM NO	KAÇMAZ NO	PAGE	FIG
2000426	K20.00426	380	46
2000570	K20.00570	260	90
2000570	K20.00570	278	74
2000570	K20.00570	302	81
2000570	K20.00570	318	90
2000570	K20.00570	336	74
2000570	K20.00570	358	74
2000906	K20.00906	284	
2000906	K20.00906	309	
2000906	K20.00906	342	
2000906	K20.00906	366	
2000907	K20.00907	284	
2000907	K20.00907	309	
2000907	K20.00907	342	
2000907	K20.00907	366	
2000984	K20.00984	385	1
2000985	K20.00985	103	
2000986	K20.00986	67	1
2000987	K20.00987	65	1
2000988	K20.00988	66	1
2000989	K20.00989	68	1
2000990	K20.00990	68	1
2000991	K20.00991	68	1
2000992	K20.00992	68	1
2000993	K20.00993	69	1
2000994	K20.00994	70	1
2000995	K20.00995	70	1
2000996	K20.00996	69	1
2000997	K20.00997	82	1
2000998	K20.00998	83	1
2000999	K20.00999	84	1
2001000	K20.01000	84	1
2001033	K20.01033	411	28
2001045	K20.01045	85	1
2001046	K20.01046	85	1
2001047	K20.01047	85	1
2001048	K20.01048	86	1
2001049	K20.01049	86	1
2001050	K20.01050	105	1
2001051	K20.01051	106	1
2001052	K20.01052	107	1
2001053	K20.01053	108	1
2001054	K20.01054	109	1
2001055	K20.01055	110	1
2001056	K20.01056	111	1
2001057	K20.01057	112	1
2001580	K20.01580	208	41
2001580	K20.01580	224	40
2001580	K20.01580	242	41
2001580	K20.01580	258	48
2001580	K20.01580	274	35
2001580	K20.01580	298	35
2001580	K20.01580	316	48
2001580	K20.01580	332	35
2001580	K20.01580	354	35
2001581	K20.01581	210	43
2001581	K20.01581	224	42
2001581	K20.01581	242	43
2001581	K20.01581	258	50
2001581	K20.01581	274	37
2001581	K20.01581	298	37
2001581	K20.01581	316	50
2001581	K20.01581	332	37
2001581	K20.01581	354	37
2001581	K20.01581	372	49
2001599	K20.01599	50	5
2001599	K20.01599	88	8
2001600	K20.01600	50	5
2001600	K20.01600	88	8
2001601	K20.01601	50	5
2001601	K20.01601	88	8
2001609	K20.01609	54	57
2001609	K20.01609	94	78
2001610	K20.01610	54	57
2001610	K20.01610	94	78
2001611	K20.01611	54	57
2001611	K20.01611	94	78
2001617	K20.01617	32	42
2001617	K20.01617	60	39
2001617	K20.01617	100	38
2001618	K20.01618	32	42
2001618	K20.01618	60	39
2001618	K20.01618	100	38
2001619	K20.01619	32	42
2001619	K20.01619	60	39
2001619	K20.01619	100	38
2001623	K20.01623	62	71
2001623	K20.01623	102	71
2001624	K20.01624	62	71
2001624	K20.01624	102	71
2001625	K20.01625	62	71
2001625	K20.01625	102	71
2001645	K20.01645	116	13
2001645	K20.01645	132	13
2001645	K20.01645	146	13
2001645	K20.01645	160	13
2001645	K20.01645	174	13
2001645	K20.01645	190	13
2001646	K20.01646	116	13
2001646	K20.01646	132	13
2001646	K20.01646	146	13
2001646	K20.01646	160	13
2001646	K20.01646	174	13
2001646	K20.01646	190	13
2001647	K20.01647	116	13
2001647	K20.01647	132	13
2001647	K20.01647	146	13
2001647	K20.01647	160	13
2001647	K20.01647	174	13
2001647	K20.01647	190	13
2001652	K20.01652	122	72
2001652	K20.01652	136	72
2001652	K20.01652	152	74
2001652	K20.01652	164	73
2001652	K20.01652	180	74
2001652	K20.01652	194	73
2001652	K20.01652	212	79
2001652	K20.01652	260	91
2001652	K20.01652	318	91
2001653	K20.01653	122	72
2001653	K20.01653	136	72
2001653	K20.01653	152	74
2001653	K20.01653	164	73
2001653	K20.01653	180	74
2001653	K20.01653	194	73
2001653	K20.01653	212	79
2001653	K20.01653	260	91
2001653	K20.01653	318	91
2001654	K20.01654	122	72
2001654	K20.01654	136	72
2001654	K20.01654	152	74
2001654	K20.01654	164	73
2001654	K20.01654	180	74
2001654	K20.01654	194	73
2001654	K20.01654	212	79
2001654	K20.01654	260	91
2001654	K20.01654	318	91
2001660	K20.01660	126	32
2001660	K20.01660	140	30
2001660	K20.01660	154	30
2001660	K20.01660	168	30
2001660	K20.01660	182	32
2001660	K20.01660	200	30
2001660	K20.01660	216	32
2001660	K20.01660	234	32
2001660	K20.01660	248	32
2001660	K20.01660	362	43

Original parts names, oem numbers, symbols and descriptions used in this catalogue are for reference purposes only.

OEM NO	KAÇMAZ NO	PAGE	FIG
2001673	K20.01673	206	10
2001673	K20.01673	222	10
2001673	K20.01673	240	11
2001673	K20.01673	254	6
2001673	K20.01673	272	3
2001673	K20.01673	296	3
2001673	K20.01673	312	6
2001673	K20.01673	330	3
2001673	K20.01673	352	3
2001673	K20.01673	370	15
2001678	K20.01678	228	77
2001678	K20.01678	246	79
2001679	K20.01679	228	77
2001679	K20.01679	246	79
2001679	K20.01679	278	75
2001679	K20.01679	302	82
2001679	K20.01679	336	75
2001679	K20.01679	358	75
2001680	K20.01680	228	77
2001680	K20.01680	246	79
2001680	K20.01680	278	75
2001680	K20.01680	302	82
2001680	K20.01680	336	75
2001680	K20.01680	358	75
2001715	K20.01715	38	4
2001716	K20.01716	38	4
2001717	K20.01717	38	4
2001726	K20.01726	46	48
2001727	K20.01727	46	48
2001728	K20.01728	46	48
2001735	K20.01735	262	91
2001735	K20.01735	320	91
2001736	K20.01736	262	91
2001736	K20.01736	320	91
2001737	K20.01737	262	91
2001737	K20.01737	320	91
2001744	K20.01744	282	62
2001744	K20.01744	306	62
2001744	K20.01744	340	62
2001752	K20.01752	278	75
2001752	K20.01752	302	82
2001752	K20.01752	336	75
2001752	K20.01752	358	75
2001778	K20.01778	278	75
2001778	K20.01778	302	82
2001778	K20.01778	336	75
2001778	K20.01778	358	75
2001804	K20.01804	370	13
2001872	K20.01872	19	
2001873	K20.01873	19	
2001876	K20.01876	19	
2001877	K20.01877	20	
2001880	K20.01880	47	
2001882	K20.01882	47	
2001884	K20.01884	81	
2001886	K20.01886	81	
2001887	K20.01887	287	1
2001969	K20.01969	48	
2001990	K20.01990	113	1
2001991	K20.01991	113	1
2001992	K20.01992	114	1
2001999	K20.01999	81	
2002000	K20.02000	81	
0091 204 015		12	67
0091 206 005		10	49
0091 301 036		10	60
0091 302 097	K20.01807	8	9
0091 302 098		8	1
0091 302 108		8	1
0091 302 110	K20.01898	8	9
0091 302 111		8	1
0091 302 152	K20.01900	8	14
0091 303 030	K20.01800	12	74
0091 303 031	K20.01910	12	75
0091 303 080	K20.01911	12	76
0091 303 136	K20.01801	12	76
0091 304 054	K20.01903	8	28
0091 304 061	K20.01798	10	36
0091 304 062	K20.01812	8	30
0091 304 202	K20.01811	8	24
0091 304 204	K20.01901	8	16
0091 304 328	K20.01802	10	38
0091 304 338	K20.01905	10	40
0091 306 036		10	60
0091 308 004		10	63
0091 308 044		10	64
0501 004 549	K20.00558	50	3
0501 004 549	K20.00558	88	5
0501 004 551	K20.00939	28	67
0501 204 597		242	29
0501 209 188	K20.01459	411	4
0501 209 212	K20.00821	411	5
0501 211 290	K20.02185	411	27
0501 214 821	K20.02009	394	58
0501 214 822	K20.02010	406	59
0501 215 062		72	9
0501 215 245	K20.00982	72	11
0501 219 311		411	25
0501 219 314		411	25
0501 219 315		411	25
0501 304 692	K20.01508	30	7
0501 304 692	K20.01508	44	8
0501 304 692	K20.01508	58	7
0501 304 692	K20.01508	60	50
0501 304 692	K20.01508	78	8
0501 304 692	K20.01508	98	7
0501 304 692	K20.01508	100	49
0501 305 887	K20.01510	124	4
0501 305 887	K20.01510	130	3
0501 305 887	K20.01510	138	4
0501 305 887	K20.01510	144	3
0501 306 212	K20.01511	124	4
0501 306 212	K20.01511	129	3
0501 306 212	K20.01511	138	4
0501 306 212	K20.01511	144	3
0501 306 212	K20.01511	154	4
0501 306 212	K20.01511	156	3
0501 306 212	K20.01511	157	3
0501 306 212	K20.01511	168	4
0501 306 212	K20.01511	170	3
0501 306 212	K20.01511	171	3
0501 306 212	K20.01511	182	4
0501 306 212	K20.01511	186	3
0501 306 212	K20.01511	187	3
0501 306 212	K20.01511	198	4
0501 306 212	K20.01511	202	3
0501 306 212	K20.01511	203	3
0501 306 212	K20.01511	232	4
0501 306 212	K20.01511	236	3
0501 307 769	K20.01657	269	6
0501 307 769	K20.01657	286	6
0501 307 769	K20.01657	310	6
0501 307 769	K20.01657	327	6
0501 307 769	K20.01657	344	6
0501 307 769	K20.01657	367	6
0501 308 981	K20.01513	198	4
0501 308 981	K20.01513	216	4
0501 308 981	K20.01513	232	4
0501 308 981	K20.01513	248	6
0501 308 981	K20.01513	264	6
0501 308 981	K20.01513	322	6
0501 311 146	K20.01010	38	10
0501 311 146	K20.01010	50	10
0501 311 146	K20.01010	68	6
0501 311 146	K20.01010	69	6
0501 311 146	K20.01010	88	17
0501 311 146	K20.01010	107	14

Original parts names, oem numbers, symbols and descriptions used in this catalogue are for reference purposes only.

OEM NO	KAÇMAZ NO	PAGE	FIG
0501 311 146	K20.01010	108	14
0501 311 146	K20.01010	109	14
0501 311 146	K20.01010	110	14
0501 311 146	K20.01010	111	14
0501 311 146	K20.01010	112	14
0501 312 738	K20.01034	269	4
0501 312 738	K20.01034	286	4
0501 312 738	K20.01034	310	4
0501 312 738	K20.01034	327	4
0501 312 738	K20.01034	344	4
0501 312 738	K20.01034	367	4
0501 313 379		22	10
0501 313 379		36	1
0501 313 379		64	1
0501 313 379		104	1
0501 313 511	K20.01733	282	37
0501 313 511	K20.01733	306	37
0501 313 511	K20.01733	340	38
0501 313 678		36	4
0501 313 678		64	4
0501 313 678		104	4
0501 313 792		34	68
0501 314 060	K20.01011	208	35
0501 314 060	K20.01011	224	35
0501 314 060	K20.01011	242	36
0501 314 060	K20.01011	256	44
0501 314 060	K20.01011	274	33
0501 314 060	K20.01011	289	12
0501 314 060	K20.01011	290	12
0501 314 060	K20.01011	291	12
0501 314 060	K20.01011	292	12
0501 314 060	K20.01011	298	33
0501 314 060	K20.01011	314	44
0501 314 060	K20.01011	332	33
0501 314 060	K20.01011	347	12
0501 314 060	K20.01011	348	12
0501 314 060	K20.01011	349	12
0501 314 060	K20.01011	354	33
0501 314 060	K20.01011	372	27
0501 314 060	K20.01011	383	14
0501 314 060	K20.01011	384	14
0501 314 060	K20.01011	385	14
0501 314 108	K20.01041	24	20
0501 314 108	K20.01041	74	24
0501 314 108	K20.01041	81	2
0501 314 108	K20.01041	82	5
0501 314 108	K20.01041	83	5
0501 314 139	K20.01517	90	36
0501 314 139	K20.01517	105	5
0501 314 139	K20.01517	106	5
0501 314 246		269	3
0501 314 246		286	3
0501 314 246		310	3
0501 314 246		327	3
0501 314 246		344	3
0501 314 246		367	3
0501 314 434	K20.02058	282	50
0501 314 434	K20.02058	306	50
0501 314 434	K20.02058	340	51
0501 314 450		48	2
0501 314 587		269	3
0501 314 587		286	3
0501 314 587		310	3
0501 314 587		327	3
0501 314 587		344	3
0501 314 587		367	3
0501 315 048	K20.01733	282	37
0501 315 048	K20.01733	306	37
0501 315 048	K20.01733	340	38
0501 315 236	K20.01068	14	12
0501 316 146		269	11
0501 316 146		286	11
0501 316 146		310	11
0501 316 146		327	11
0501 316 146		344	11
0501 316 146		367	11
0501 316 322	K20.02144	390	6
0501 316 322	K20.02144	402	6
0501 316 990		22	7
0501 316 990		36	4
0501 316 990		64	4
0501 316 990		104	4
0501 317 240		269	8
0501 317 240		286	8
0501 317 240		310	8
0501 317 240		327	8
0501 317 240		344	8
0501 317 240		367	8
0501 317 402		14	2
0501 317 536		264	17
0501 317 536		269	30
0501 317 536		280	33
0501 317 536		286	30
0501 317 536		310	30
0501 317 536		322	17
0501 317 536		327	30
0501 317 536		340	34
0501 317 536		344	30
0501 317 536		362	35
0501 317 536		367	30
0501 318 308		36	7
0501 318 308		48	6
0501 318 308		64	7
0501 318 308		104	7
0501 318 308		269	5
0501 318 308		286	5
0501 318 308		310	5
0501 318 308		327	5
0501 318 308		344	5
0501 318 308		367	5
0501 318 308		381	1
0501 321 065	K20.01986	22	10
0501 321 065	K20.01986	72	14
0501 321 451		390	2
0501 321 451		402	2
0501 321 879		72	15
0501 321 940		372	31
0501 322 265		381	11
0501 322 766		370	9
0501 322 776		381	6
0501 322 778		378	34
0501 322 778		381	10
0501 322 825		72	5
0501 322 825		72	15
0501 322 828		22	7
0501 322 828		72	2
0501 322 829		28	68
0501 323 705		381	8
0501 323 922	K20.02143	394	70
0501 323 922	K20.02143	406	72
0501 324 362		381	9
0501 324 454		370	7
0501 324 454		381	7
0501 324 670	K20.01779	269	5
0501 324 670	K20.01779	272	12
0501 324 670	K20.01779	286	5
0501 324 670	K20.01779	296	12
0501 324 670	K20.01779	310	5
0501 324 670	K20.01779	327	5
0501 324 670	K20.01779	330	12
0501 324 670	K20.01779	344	5
0501 324 670	K20.01779	352	12
0501 324 670	K20.01779	367	5
0501 324 670	K20.01779	372	41
0501 325 918	K20.01034	269	4
0501 325 918	K20.01034	286	4
0501 325 918	K20.01034	310	4

Original parts names, oem numbers, symbols and descriptions used in this catalogue are for reference purposes only.

OEM NO	KAÇMAZ NO	PAGE	FIG
0501 325 918	K20.01034	327	4
0501 325 918	K20.01034	344	4
0501 325 918	K20.01034	367	4
0501 330 535	K20.02174	396	23
0501 330 535	K20.02174	408	23
0501 331 906		282	52
0501 331 906		306	52
0501 331 906		340	53
0501 398 351	K20.01311	10	39
0501317 536		304	33
0630 501 006		411	21
0630 501 024		8	10
0630 501 031		144	9
0630 501 040		26	54
0630 501 040		76	66
0630 501 040		86	3
0630 501 041		52	25
0630 501 041		65	13
0630 501 041		66	13
0630 501 041		67	13
0630 501 041		74	36
0630 501 041		82	14
0630 501 041		83	14
0630 501 042		22	1
0630 501 044		90	41
0630 501 044		105	10
0630 501 044		106	10
0630 501 046		92	59
0630 501 046		105	26
0630 501 046		106	26
0630 501 047		18	54
0630 501 051		22	4
0630 501 051		88	1
0630 501 056		32	54
0630 501 056		62	59
0630 501 056		102	59
0630 501 058	K20.01682	248	2
0630 501 061		30	22
0630 501 061		58	22
0630 501 061		78	23
0630 501 061		98	21
0630 501 061		264	31
0630 501 061		280	21
0630 501 061		304	21
0630 501 061		322	30
0630 501 061		338	22
0630 501 063		72	19
0630 501 067		14	14
0630 501 067		26	45
0630 501 067		52	25
0630 501 067		74	36
0630 501 067		94	71
0630 501 068		14	14
0630 501 068		74	36
0630 501 069	K20.02139	14	14
0630 501 069	K20.02139	52	25
0630 501 069	K20.02139	74	36
0630 501 070		52	25
0630 501 070		74	36
0630 501 071		92	59
0630 501 072		92	59
0630 501 074		28	54
0630 501 076		28	54
0630 501 104		26	54
0630 501 111		76	64
0630 501 112		26	50
0630 501 112		54	56
0630 501 112		76	64
0630 501 112		376	89
0630 501 114		26	50
0630 501 114		54	56
0630 501 114		76	64
0630 501 114		376	89
0630 501 116		26	50
0630 501 116		76	64
0630 501 116		82	33
0630 501 116		83	33
0630 501 116		376	89
0630 501 117		54	56
0630 501 118		26	50
0630 501 118		54	56
0630 501 118		76	64
0630 501 118		376	89
0630 501 120		24	16
0630 501 120		72	20
0630 501 135		56	59
0630 501 140		26	54
0630 501 141		32	54
0630 501 141		60	59
0630 501 141		102	59
0630 501 145		26	50
0630 501 145		50	12
0630 501 145		54	56
0630 501 146	K20.02138	26	50
0630 501 146	K20.02138	50	12
0630 501 146	K20.02138	54	56
0630 501 146	K20.02138	65	3
0630 501 146	K20.02138	66	3
0630 501 146	K20.02138	67	3
0630 501 147		12	71
0630 501 147		26	50
0630 501 147		54	56
0630 501 148		26	50
0630 501 148		54	56
0630 501 149		50	12
0630 501 150		26	50
0630 501 150		54	56
0630 501 151		12	71
0630 501 151		26	50
0630 501 151		54	56
0630 501 152		32	54
0630 501 152		62	59
0630 501 152		102	59
0630 501 153		8	31
0630 501 154		90	41
0630 501 155		92	41
0630 501 156		24	16
0630 501 156		72	20
0630 501 157		22	16
0630 501 157		72	20
0630 501 157		82	2
0630 501 157		83	2
0630 501 173		30	22
0630 501 173		58	22
0630 501 173		78	23
0630 501 173		98	21
0630 501 174		30	22
0630 501 174		58	22
0630 501 174		78	23
0630 501 174		98	21
0630 501 175		30	22
0630 501 175		58	22
0630 501 175		78	23
0630 501 175		98	21
0630 501 175		378	22
0630 501 181		8	31
0630 501 189		18	54
0630 501 190		18	54
0630 501 194		26	45
0630 501 194		54	52
0630 501 194		92	71
0630 501 195		8	12
0630 501 195		26	45
0630 501 195		54	52
0630 501 195		65	31
0630 501 195		66	31
0630 501 195		67	31

Original parts names, oem numbers, symbols and descriptions used in this catalogue are for reference purposes only.

OEM NO	KAÇMAZ NO	PAGE	FIG
0630 501 195		92	71
0630 501 195		105	31
0630 501 195		106	31
0630 501 197		26	45
0630 501 197		54	52
0630 501 197		92	71
0630 501 208		22	16
0630 501 208		72	20
0630 501 210		24	16
0630 501 210		72	20
0630 501 278		74	36
0630 501 300		56	59
0630 501 301		56	59
0630 501 312		278	68
0630 501 312		300	75
0630 501 312		336	68
0630 501 312		358	68
0630 501 312		376	87
0630 501 313	K20.02148	260	84
0630 501 313	K20.02148	276	68
0630 501 313	K20.02148	300	75
0630 501 313	K20.02148	318	84
0630 501 313	K20.02148	334	68
0630 501 313	K20.02148	356	68
0630 501 313	K20.02148	376	87
0630 501 314	K20.02141	260	84
0630 501 314	K20.02141	276	68
0630 501 314	K20.02141	300	75
0630 501 314	K20.02141	318	84
0630 501 314	K20.02141	334	68
0630 501 314	K20.02141	356	68
0630 501 314	K20.02141	376	87
0630 501 315	K20.02147	260	84
0630 501 315	K20.02147	276	68
0630 501 315	K20.02147	300	75
0630 501 315	K20.02147	318	84
0630 501 315	K20.02147	334	68
0630 501 315	K20.02147	356	68
0630 501 315	K20.02147	376	87
0630 501 316	K20.02146	260	84
0630 501 316	K20.02146	276	68
0630 501 316	K20.02146	287	32
0630 501 316	K20.02146	288	32
0630 501 316	K20.02146	300	75
0630 501 316	K20.02146	318	84
0630 501 316	K20.02146	334	68
0630 501 316	K20.02146	345	32
0630 501 316	K20.02146	346	32
0630 501 316	K20.02146	356	68
0630 501 316	K20.02146	376	87
0630 501 316	K20.02146	382	32
0630 501 325		24	42
0630 501 326		24	42
0630 501 327		24	42
0630 501 328		26	42
0630 501 329		26	42
0630 501 333		278	68
0630 501 333		300	75
0630 501 333		336	68
0630 501 333		358	68
0630 501 338		10	51
0630 501 338		260	84
0630 501 338		276	68
0630 501 338		300	75
0630 501 338		318	84
0630 501 338		334	68
0630 501 338		356	68
0630 501 338		376	87
0630 501 339	K20.02151	260	84
0630 501 339	K20.02151	276	68
0630 501 339	K20.02151	300	75
0630 501 339	K20.02151	318	84
0630 501 339	K20.02151	334	68
0630 501 339	K20.02151	356	68
0630 501 363		18	54
0630 501 364		18	54
0630 501 365		18	54
0630 501 366		18	54
0630 501 373		16	54
0630 501 385		32	54
0630 501 385		62	59
0630 501 385		102	59
0630 501 515		10	50
0630 502 021		254	15
0630 502 021		312	15
0630 502 022		28	63
0630 502 022		42	70
0630 502 022		56	68
0630 502 022		76	75
0630 502 022		96	89
0630 502 027	K20.01505	208	34
0630 502 027	K20.01505	224	34
0630 502 027	K20.01505	242	35
0630 502 027	K20.01505	256	43
0630 502 027	K20.01505	274	32
0630 502 027	K20.01505	289	11
0630 502 027	K20.01505	290	11
0630 502 027	K20.01505	291	11
0630 502 027	K20.01505	292	11
0630 502 027	K20.01505	298	32
0630 502 027	K20.01505	314	43
0630 502 027	K20.01505	332	32
0630 502 027	K20.01505	347	11
0630 502 027	K20.01505	348	11
0630 502 027	K20.01505	349	11
0630 502 027	K20.01505	354	32
0630 502 027	K20.01505	372	26
0630 502 027	K20.01505	383	13
0630 502 027	K20.01505	384	13
0630 502 027	K20.01505	385	13
0630 502 063	K20.01502	22	15
0630 502 063	K20.01502	50	9
0630 502 063	K20.01502	68	5
0630 502 063	K20.01502	69	5
0630 502 063	K20.01502	84	5
0630 502 063	K20.01502	85	5
0630 502 063	K20.01502	88	16
0630 502 063	K20.01502	107	13
0630 502 063	K20.01502	108	13
0630 502 063	K20.01502	109	13
0630 502 063	K20.01502	110	13
0630 502 063	K20.01502	111	13
0630 502 063	K20.01502	112	13
0630 502 218	K20.02100	396	13
0630 502 218	K20.02100	408	13
0630 503 010		144	8
0630 503 020	K20.02121	8	7
0630 503 020	K20.02121	10	67
0630 513 015		14	7
0630 513 073		32	48
0630 513 073		60	53
0630 513 073		100	53
0630 513 139	K20.02091	396	8
0630 513 139	K20.02091	408	8
0630 513 187		32	48
0630 513 187		60	53
0630 513 187		100	53
0630 513 188		32	48
0630 513 188		60	53
0630 513 188		100	53
0630 513 189		32	48
0630 513 189		60	53
0630 513 189		100	53
0630 513 190		32	48
0630 513 190		60	53
0630 513 190		100	53
0630 513 191		32	48

Original parts names, oem numbers, symbols and descriptions used in this catalogue are for reference purposes only.

OEM NO	KAÇMAZ NO	PAGE	FIG
0630 513 191		60	53
0630 513 191		100	53
0630 513 238		60	53
0630 513 238		100	53
0630 513 243	K20.01694	360	2
0630 513 245	K20.01695	360	2
0630 531 049		56	59
0630 531 049		94	79
0630 531 050		54	59
0630 531 050		69	3
0630 531 050		70	3
0630 531 050		94	79
0630 531 050		105	35
0630 531 050		106	35
0630 531 050		113	2
0630 531 050		114	2
0630 531 050		144	1
0630 531 052		24	16
0630 531 058		42	59
0630 531 058		94	77
0630 531 064	K20.02200	26	50
0630 531 064	K20.02200	54	56
0630 531 064	K20.02200	65	35
0630 531 064	K20.02200	66	35
0630 531 064	K20.02200	67	35
0630 531 064	K20.02200	76	64
0630 531 064	K20.02200	293	2
0630 531 064	K20.02200	350	2
0630 531 064	K20.02200	376	89
0630 531 064	K20.02200	386	2
0630 531 065	K20.01960	26	50
0630 531 065	K20.01960	54	56
0630 531 065	K20.01960	320	92
0630 531 065	K20.01960	376	89
0630 531 079		92	41
0630 531 141		14	14
0630 531 141		26	45
0630 531 141		54	52
0630 531 141		74	36
0630 531 141		94	71
0630 531 314		56	59
0630 531 314		94	79
0630 531 315		56	59
0630 531 315		94	79
0630 531 316		56	59
0630 531 316		94	79
0630 532 130	K20.02177	411	6
0631 306 699		394	56
0631 306 699		406	57
0631 306 832	K20.02179	411	8
0631 329 028	K20.01719	40	22
0631 329 037		30	6
0631 329 037		58	5
0631 329 037		60	48
0631 329 037		98	6
0631 329 037		100	47
0631 329 049		44	5
0631 329 049		78	5
0631 329 051		264	4
0631 329 051		280	4
0631 329 051		304	4
0631 329 051		322	4
0631 329 051		338	4
0631 329 051		360	10
0631 329 064	K20.01731	38	9
0631 329 069	K20.01718	40	23
0631 329 120		394	60
0631 329 120		406	61
0631 329 147		280	4
0631 329 147		304	4
0631 329 147		338	4
0631 329 147		360	10
0631 329 147		378	4
0631 329 167		264	3
0631 329 167		280	5
0631 329 167		304	5
0631 329 167		322	3
0631 329 167		338	5
0631 329 167		360	11
0631 329 175		44	6
0631 329 175		78	6
0631 329 261		280	5
0631 329 261		304	5
0631 329 261		338	5
0631 329 261		360	11
0631 329 261		378	5
0631 349 953		80	42
0631 531 065		262	92
0631 531 065		278	76
0631 531 065		302	83
0631 531 065		336	76
0631 531 065		358	76
0634 300 020	K20.01035	269	5
0634 300 020	K20.01035	286	5
0634 300 020	K20.01035	310	5
0634 300 020	K20.01035	327	5
0634 300 020	K20.01035	344	5
0634 300 020	K20.01035	367	5
0634 300 302	K20.01037	36	1
0634 300 302	K20.01037	269	1
0634 300 302	K20.01037	286	1
0634 300 302	K20.01037	310	1
0634 300 302	K20.01037	327	1
0634 300 302	K20.01037	344	1
0634 300 302	K20.01037	367	1
0634 300 712	K20.02075	10	66
0634 303 110		60	40
0634 303 110		100	39
0634 303 121		42	61
0634 307 367	K20.01036	36	2
0634 307 367	K20.01036	269	2
0634 307 367	K20.01036	286	2
0634 307 367	K20.01036	310	2
0634 307 367	K20.01036	327	2
0634 307 367	K20.01036	344	2
0634 307 367	K20.01036	367	2
0634 310 648	K20.01006	118	37
0634 310 648	K20.01006	148	37
0634 310 648	K20.01006	176	37
0634 310 648	K20.01006	208	37
0634 310 733	K20.01004	146	2
0634 310 733	K20.01004	160	2
0634 310 733	K20.01004	190	2
0634 310 733	K20.01004	206	2
0634 310 733	K20.01004	222	2
0634 312 523		269	29
0634 312 523		286	29
0634 312 523		310	29
0634 312 523		327	29
0634 312 523		344	29
0634 312 523		367	29
0634 313 018		254	22
0634 313 018		269	24
0634 313 018		272	18
0634 313 018		286	24
0634 313 018		296	18
0634 313 018		310	24
0634 313 018		312	22
0634 313 018		327	24
0634 313 018		330	18
0634 313 018		344	24
0634 313 018		352	18
0634 313 018		367	24
0634 313 018		372	45
0634 313 046		72	6
0634 313 100		18	66
0634 313 198		269	21

OEM NO	KAÇMAZ NO	PAGE	FIG
0634 313 198		286	21
0634 313 198		310	21
0634 313 198		327	21
0634 313 198		344	21
0634 313 198		367	21
0634 313 216		44	29
0634 313 216		90	30
0634 313 223	K20.02136	32	46
0634 313 223	K20.02136	80	46
0634 313 232		34	61
0634 313 232		62	67
0634 313 232		102	67
0634 313 293		269	22
0634 313 293		286	22
0634 313 293		310	22
0634 313 293		327	22
0634 313 293		344	22
0634 313 293		367	22
0634 313 320		254	20
0634 313 320		269	23
0634 313 320		272	16
0634 313 320		286	23
0634 313 320		296	16
0634 313 320		310	23
0634 313 320		312	20
0634 313 320		327	23
0634 313 320		330	16
0634 313 320		344	23
0634 313 320		352	16
0634 313 320		367	23
0634 313 320		372	43
0634 313 338	K20.02135	32	32
0634 313 338	K20.02135	60	35
0634 313 338	K20.02135	78	34
0634 313 338	K20.02135	100	34
0634 313 424		46	41
0634 313 505		269	25
0634 313 505		286	25
0634 313 505		310	25
0634 313 505		327	25
0634 313 505		344	25
0634 313 505		367	25
0634 313 520		232	25
0634 313 520		248	27
0634 313 671		118	24
0634 313 671		134	24
0634 313 671		148	24
0634 313 671		162	24
0634 313 671		176	24
0634 313 671		192	24
0634 313 671		208	21
0634 313 671		224	21
0634 313 671		240	22
0634 313 805	K20.02113	269	27
0634 313 805	K20.02113	282	44
0634 313 805	K20.02113	286	27
0634 313 805	K20.02113	306	44
0634 313 805	K20.02113	310	27
0634 313 805	K20.02113	327	27
0634 313 805	K20.02113	340	45
0634 313 805	K20.02113	344	27
0634 313 805	K20.02113	367	27
0634 313 805	K20.02113	380	44
0634 313 805	K20.02113	398	37
0634 313 805	K20.02113	410	37
0634 314 015		266	43
0634 314 015		269	26
0634 314 015		286	26
0634 314 015		310	26
0634 314 015		324	42
0634 314 015		327	26
0634 314 015		344	26
0634 314 015		367	26
0634 314 018		118	30
0634 314 018		134	30
0634 314 018		148	30
0634 314 018		162	30
0634 314 018		176	30
0634 314 018		192	30
0634 314 018		208	27
0634 314 018		224	27
0634 314 018		242	28
0634 314 019		124	25
0634 314 019		138	25
0634 314 019		154	25
0634 314 019		168	25
0634 314 019		182	25
0634 314 019		198	25
0634 314 019		216	25
0634 314 019		232	25
0634 314 020		269	20
0634 314 020		286	20
0634 314 020		310	20
0634 314 020		327	20
0634 314 020		344	20
0634 314 020		367	20
0634 314 021		269	28
0634 314 021		286	28
0634 314 021		310	28
0634 314 021		327	28
0634 314 021		344	28
0634 314 021		367	28
0634 349 655		72	8
0634 801 062		269	8
0634 801 062		286	8
0634 801 062		310	8
0634 801 062		327	8
0634 801 062		344	8
0634 801 062		367	8
0634 801 097		269	9
0634 801 097		286	9
0634 801 097		310	9
0634 801 097		327	9
0634 801 097		344	9
0634 801 097		367	9
0634 801 173		269	10
0634 801 173		286	10
0634 801 173		310	10
0634 801 173		327	10
0634 801 173		344	10
0634 801 173		367	10
0634 801 203		269	11
0634 801 203		286	11
0634 801 203		310	11
0634 801 203		327	11
0634 801 203		344	11
0634 801 203		367	11
0634 801 206		269	12
0634 801 206		286	12
0634 801 206		310	12
0634 801 206		327	12
0634 801 206		344	12
0634 801 206		367	12
0634 801 219		269	13
0634 801 219		286	13
0634 801 219		310	13
0634 801 219		327	13
0634 801 219		344	13
0634 801 219		367	13
0634 801 249		269	14
0634 801 249		286	14
0634 801 249		310	14
0634 801 249		327	14
0634 801 249		344	14
0634 801 249		367	14
0634 801 321		269	15
0634 801 321		286	15

Original parts names, oem numbers, symbols and descriptions used in this catalogue are for reference purposes only.

OEM NO	KAÇMAZ NO	PAGE	FIG
0634 801 321		310	15
0634 801 321		327	15
0634 801 321		344	15
0634 801 321		367	15
0635 300 110	K20.01344	6	63
0635 303 019	K20.02181	411	15
0635 303 038	K20.01472	282	48
0635 303 038	K20.01472	306	48
0635 303 038	K20.01472	340	49
0635 304 904	K20.01134	266	39
0635 304 904	K20.01134	282	40
0635 304 904	K20.01134	306	40
0635 304 904	K20.01134	324	38
0635 304 904	K20.01134	340	41
0635 304 904	K20.01134	362	42
0635 304 904	K20.01134	380	40
0635 304 904	K20.01134	398	33
0635 304 904	K20.01134	410	33
0635 332 066	K20.01156	60	38
0635 332 066	K20.01156	100	37
0635 332 137		144	7
0635 338 028	K20.01334	32	49
0635 338 028	K20.01334	60	54
0635 338 028	K20.01334	102	54
0635 338 035	K20.01135	198	8
0635 338 035	K20.01135	232	8
0635 338 035	K20.01135	248	10
0635 338 035	K20.01135	322	22
0635 338 048	K20.01132	124	8
0635 338 048	K20.01132	138	8
0635 338 049	K20.01133	30	12
0635 338 049	K20.01133	58	13
0635 338 049	K20.01133	98	12
0635 338 049	K20.01133	124	8
0635 338 049	K20.01133	138	8
0635 338 049	K20.01133	154	8
0635 338 049	K20.01133	168	8
0635 338 049	K20.01133	182	8
0635 338 049	K20.01133	198	8
0635 338 049	K20.01133	216	8
0635 338 049	K20.01133	264	23
0635 338 090	K20.01149	44	13
0635 360 007	K20.01138	360	5
0635 374 019	K20.01470	12	77
0635 376 023	K20.01122	54	58
0635 376 023	K20.01122	94	80
0635 460 010	K20.01457	40	16
0635 460 010	K20.01457	47	4
0635 460 010	K20.01457	47	3
0635 460 010	K20.01457	48	3
0635 470 046		390	23
0635 470 046		404	23
0635 501 398	K20.01146	18	60
0636 011 777	K20.02114	398	39
0636 011 777	K20.02114	410	39
0730 001 799	K20.01606	54	57
0730 001 799	K20.01606	94	78
0730 002 543		34	67
0730 002 544		34	67
0730 002 545		34	67
0730 002 546	K20.01622	34	67
0730 002 546	K20.01622	62	71
0730 002 546	K20.01622	102	71
0730 002 547		34	67
0730 002 548		34	67
0730 002 549		34	67
0730 002 654		14	4
0730 002 654		22	11
0730 002 655		14	4
0730 002 655		22	11
0730 002 656		14	4
0730 002 656		22	11
0730 002 657	K20.01724	14	4
0730 002 657	K20.01724	22	11
0730 002 657	K20.01724	46	48
0730 002 658		14	4
0730 002 658		22	11
0730 002 659		14	4
0730 002 659		22	11
0730 002 660		14	4
0730 002 661	K20.01725	46	48
0730 002 665		10	62
0730 002 672		10	61
0730 002 684		8	13
0730 002 934		26	53
0730 002 935		26	53
0730 002 936		26	53
0730 002 937		26	53
0730 002 938		26	53
0730 002 939		26	53
0730 003 159	K20.01521	120	43
0730 003 159	K20.01521	134	36
0730 003 159	K20.01521	150	43
0730 003 159	K20.01521	162	36
0730 003 159	K20.01521	176	43
0730 003 159	K20.01521	192	36
0730 003 161	K20.01520	118	43
0730 003 161	K20.01520	134	36
0730 003 161	K20.01520	150	43
0730 003 161	K20.01520	162	36
0730 003 161	K20.01520	176	43
0730 003 161	K20.01520	192	36
0730 003 396		144	6
0730 003 414	K20.01605	54	57
0730 003 414	K20.01605	94	78
0730 003 436		26	53
0730 003 517	K20.01519	118	43
0730 003 517	K20.01519	134	36
0730 003 517	K20.01519	150	43
0730 003 517	K20.01519	162	36
0730 003 517	K20.01519	176	43
0730 003 517	K20.01519	192	36
0730 003 518	K20.01518	118	43
0730 003 518	K20.01518	134	36
0730 003 518	K20.01518	150	43
0730 003 518	K20.01518	162	36
0730 003 518	K20.01518	176	43
0730 003 518	K20.01518	192	36
0730 003 884	K20.02094	396	12
0730 003 884	K20.02094	408	12
0730 003 894	K20.02095	396	12
0730 003 894	K20.02095	408	12
0730 003 904	K20.02096	396	12
0730 003 904	K20.02096	408	12
0730 003 914	K20.02097	396	12
0730 003 914	K20.02097	408	12
0730 004 237	K20.01522	120	43
0730 004 237	K20.01522	134	36
0730 004 237	K20.01522	150	43
0730 004 237	K20.01522	162	36
0730 004 237	K20.01522	176	43
0730 004 237	K20.01522	192	36
0730 004 637	K20.02098	396	12
0730 004 637	K20.02098	408	12
0730 004 643	K20.02099	396	12
0730 004 643	K20.02099	408	12
0730 004 732		26	53
0730 004 734		26	53
0730 004 736		26	53
0730 004 785	K20.01608	54	57
0730 004 785	K20.01608	94	78
0730 004 786	K20.01607	54	57
0730 004 786	K20.01607	94	78
0730 004 790	K20.01604	54	57
0730 004 790	K20.01604	94	78
0730 004 793	K20.01603	54	57
0730 004 793	K20.01603	94	78

Original parts names, oem numbers, symbols and descriptions used in this catalogue are for reference purposes only.

OEM NO	KAÇMAZ NO	PAGE	FIG
0730 004 796	K20.01602	54	57
0730 004 796	K20.01602	94	78
0730 004 800	K20.01597	50	5
0730 004 800	K20.01597	88	8
0730 004 805	K20.01596	50	5
0730 004 805	K20.01596	88	8
0730 004 808	K20.01595	50	5
0730 004 808	K20.01595	88	8
0730 005 465	K20.01532	256	47
0730 005 465	K20.01532	314	47
0730 005 466	K20.01524	208	40
0730 005 466	K20.01524	224	39
0730 005 466	K20.01524	242	40
0730 005 466	K20.01524	256	47
0730 005 466	K20.91524	256	47
0730 005 466	K20.81524	256	47
0730 005 466	K20.71524	258	47
0730 005 466	K20.01524	314	47
0730 005 466	K20.91524	314	47
0730 005 466	K20.81524	314	47
0730 005 466	K20.71524	314	47
0730 005 468	K20.01523	208	40
0730 005 468	K20.01523	224	39
0730 005 468	K20.01523	242	40
0730 005 468	K20.01523	258	47
0730 005 468	K20.91523	258	47
0730 005 468	K20.01523	314	47
0730 005 486	K20.01710	38	4
0730 005 494	K20.01709	38	4
0730 005 646	K20.01598	50	5
0730 005 646	K20.01598	88	8
0730 005 743	K20.01669	206	10
0730 005 743	K20.01669	222	10
0730 005 743	K20.01669	240	11
0730 005 747	K20.01582	206	10
0730 005 747	K20.01582	222	10
0730 005 747	K20.01582	240	11
0730 005 747	K20.01582	254	6
0730 005 747	K20.01582	272	3
0730 005 747	K20.01582	296	3
0730 005 747	K20.01582	312	6
0730 005 747	K20.01582	330	3
0730 005 747	K20.01582	352	3
0730 005 747	K20.01582	370	15
0730 005 748	K20.01668	206	10
0730 005 748	K20.01668	222	10
0730 005 748	K20.01668	240	11
0730 005 748	K20.01668	254	6
0730 005 748	K20.01668	272	3
0730 005 748	K20.01668	296	3
0730 005 748	K20.01668	312	6
0730 005 748	K20.01668	330	3
0730 005 748	K20.01668	352	3
0730 005 748	K20.01668	370	15
0730 005 857		14	4
0730 005 857		22	11
0730 006 169		22	11
0730 006 171	K20.01531	256	47
0730 006 171	K20.01531	314	47
0730 006 179		14	4
0730 006 180		14	4
0730 006 180		22	11
0730 006 182		22	11
0730 006 184		22	11
0730 006 534	K20.01616	32	42
0730 006 534	K20.01616	60	39
0730 006 534	K20.01616	100	38
0730 006 541	K20.01712	38	4
0730 006 543	K20.01711	38	4
0730 007 129	K20.01687	254	6
0730 007 129	K20.01687	272	3
0730 007 129	K20.01687	296	3
0730 007 129	K20.01687	312	6
0730 007 129	K20.01687	330	3
0730 007 129	K20.01687	352	3
0730 007 129	K20.01687	370	15
0730 007 136	K20.01686	254	6
0730 007 136	K20.01686	272	3
0730 007 136	K20.01686	296	3
0730 007 136	K20.01686	312	6
0730 007 136	K20.01686	330	3
0730 007 136	K20.01686	352	3
0730 007 136	K20.01686	370	15
0730 007 361	K20.01713	38	4
0730 007 479	K20.01685	254	6
0730 007 479	K20.01685	272	3
0730 007 479	K20.01685	296	3
0730 007 479	K20.01685	312	6
0730 007 479	K20.01685	330	3
0730 007 479	K20.01685	352	3
0730 007 479	K20.01685	370	15
0730 007 483	K20.01684	254	6
0730 007 483	K20.01684	272	3
0730 007 483	K20.01684	296	3
0730 007 483	K20.01684	312	6
0730 007 483	K20.01684	330	3
0730 007 483	K20.01684	352	3
0730 007 483	K20.01684	370	15
0730 007 486	K20.01683	254	6
0730 007 486	K20.01683	272	3
0730 007 486	K20.01683	296	3
0730 007 486	K20.01683	312	6
0730 007 486	K20.01683	330	3
0730 007 486	K20.01683	352	3
0730 007 486	K20.01683	370	15
0730 007 784		392	49
0730 007 784		406	50
0730 007 786		392	49
0730 007 786		406	50
0730 008 051		392	49
0730 008 052		392	49
0730 008 053		392	49
0730 008 055		269	16
0730 008 055		286	16
0730 008 055		310	16
0730 008 055		327	16
0730 008 055		344	16
0730 008 055		367	16
0730 008 056		269	17
0730 008 056		286	17
0730 008 056		310	17
0730 008 056		327	17
0730 008 056		344	17
0730 008 056		367	17
0730 008 057		269	18
0730 008 057		286	18
0730 008 057		310	18
0730 008 057		327	18
0730 008 057		344	18
0730 008 057		367	18
0730 008 292		394	49
0730 008 292		406	50
0730 008 294		394	49
0730 008 294		406	50
0730 008 296		394	49
0730 008 296		406	50
0730 008 298		394	49
0730 008 298		406	50
0730 008 301		394	49
0730 008 301		406	50
0730 008 303		394	49
0730 008 303		406	50
0730 008 520		390	11
0730 008 520		402	11
0730 008 522		390	11
0730 008 522		402	11
0730 008 524		390	11

Original parts names, oem numbers, symbols and descriptions used in this catalogue are for reference purposes only.

OEM NO	KAÇMAZ NO	PAGE	FIG
0730 008 524		402	11
0730 008 526		390	11
0730 008 526		402	11
0730 008 528		390	11
0730 008 528		402	11
0730 008 530		390	11
0730 008 530		402	11
0730 008 532		390	11
0730 008 532		402	11
0730 008 568		14	4
0730 008 576		14	4
0730 009 051		404	50
0730 009 052		404	50
0730 009 053		404	50
0730 009 856		52	41
0730 009 856		92	67
0730 061 816	K20.01554	116	11
0730 061 816	K20.01554	132	11
0730 061 816	K20.01554	146	11
0730 061 816	K20.01554	160	11
0730 061 816	K20.01554	174	11
0730 061 816	K20.01554	190	11
0730 061 816	K20.01554	206	8
0730 061 816	K20.01554	222	8
0730 061 816	K20.01554	240	9
0730 062 579	K20.01547	116	8
0730 062 579	K20.01547	132	8
0730 062 579	K20.01547	146	8
0730 062 579	K20.01547	160	8
0730 062 579	K20.01547	174	8
0730 062 579	K20.01547	190	8
0730 062 579	K20.01547	256	27
0730 062 579	K20.01547	314	27
0730 062 781	K20.01571	208	42
0730 062 781	K20.01571	224	41
0730 062 781	K20.01571	242	42
0730 062 781	K20.01571	258	49
0730 062 781	K20.01571	274	36
0730 062 781	K20.01571	298	36
0730 062 781	K20.01571	316	49
0730 062 781	K20.01571	332	36
0730 062 781	K20.01571	354	36
0730 062 781	K20.01571	372	48
0730 063 154	K20.01540	90	33
0730 063 154	K20.01540	105	3
0730 063 154	K20.01540	106	3
0730 063 258		392	36
0730 063 258		404	36
0730 100 115	K20.01658	126	32
0730 100 115	K20.01658	138	30
0730 100 115	K20.01658	154	30
0730 100 115	K20.01658	168	30
0730 100 115	K20.01658	182	32
0730 100 115	K20.01658	200	30
0730 100 115	K20.01658	216	32
0730 100 115	K20.01658	234	32
0730 100 115	K20.01658	248	32
0730 100 115	K20.01658	362	43
0730 100 116	K20.01659	126	32
0730 100 116	K20.01659	140	30
0730 100 116	K20.01659	154	30
0730 100 116	K20.01659	168	30
0730 100 116	K20.01659	182	32
0730 100 116	K20.01659	200	30
0730 100 116	K20.01659	216	32
0730 100 116	K20.01659	234	32
0730 100 116	K20.01659	248	32
0730 100 116	K20.01659	362	43
0730 100 799	K20.01748	262	91
0730 100 799	K20.01748	278	75
0730 100 799	K20.01748	302	82
0730 100 799	K20.01748	318	91
0730 100 799	K20.01748	336	75
0730 100 799	K20.01748	358	75
0730 100 801	K20.01747	262	91
0730 100 801	K20.01747	278	75
0730 100 801	K20.01747	302	82
0730 100 801	K20.01747	318	91
0730 100 801	K20.01747	336	75
0730 100 801	K20.01747	358	75
0730 100 803	K20.01746	262	91
0730 100 803	K20.01746	278	75
0730 100 803	K20.01746	302	82
0730 100 803	K20.01746	318	91
0730 100 803	K20.01746	336	75
0730 100 803	K20.01746	358	75
0730 101 467	K20.01676	228	77
0730 101 467	K20.01676	246	79
0730 101 467	K20.01676	262	91
0730 101 467	K20.01676	278	75
0730 101 467	K20.01676	302	82
0730 101 467	K20.01676	318	91
0730 101 467	K20.01676	336	75
0730 101 467	K20.01676	358	75
0730 101 469		262	91
0730 101 469		278	75
0730 101 469		302	82
0730 101 469		320	91
0730 101 469		336	75
0730 101 469		358	75
0730 102 060	K20.01649	122	72
0730 102 060	K20.01649	136	72
0730 102 060	K20.01649	152	74
0730 102 060	K20.01649	164	73
0730 102 060	K20.01649	180	74
0730 102 060	K20.01649	194	73
0730 102 060	K20.01649	212	79
0730 102 060	K20.01649	260	91
0730 102 060	K20.01649	318	91
0730 102 068	K20.01650	122	72
0730 102 068	K20.01650	136	72
0730 102 068	K20.01650	152	74
0730 102 068	K20.01650	164	73
0730 102 068	K20.01650	180	74
0730 102 068	K20.01650	194	73
0730 102 068	K20.01650	212	79
0730 102 068	K20.01650	260	91
0730 102 068	K20.01650	318	91
0730 102 075	K20.01651	122	72
0730 102 075	K20.01651	136	72
0730 102 075	K20.01651	152	74
0730 102 075	K20.01651	164	73
0730 102 075	K20.01651	180	74
0730 102 075	K20.01651	194	73
0730 102 075	K20.01651	212	79
0730 102 075	K20.01651	260	91
0730 102 075	K20.01651	318	91
0730 102 099	K20.01648	122	72
0730 102 099	K20.01648	136	72
0730 102 099	K20.01648	152	74
0730 102 099	K20.01648	164	73
0730 102 099	K20.01648	180	74
0730 102 099	K20.01648	194	73
0730 102 099	K20.01648	212	79
0730 102 099	K20.01648	260	91
0730 102 099	K20.01648	318	91
0730 102 504	K20.01644	116	13
0730 102 504	K20.01644	132	13
0730 102 504	K20.01644	146	13
0730 102 504	K20.01644	160	13
0730 102 504	K20.01644	174	13
0730 102 504	K20.01644	190	13
0730 102 632		8	6
0730 103 102	K20.01509	30	8
0730 103 102	K20.01509	44	9
0730 103 102	K20.01509	58	8
0730 103 102	K20.01509	60	51

Original parts names, oem numbers, symbols and descriptions used in this catalogue are for reference purposes only.

OEM NO	KAÇMAZ NO	PAGE	FIG
0730 103 102	K20.01509	78	9
0730 103 102	K20.01509	98	8
0730 103 102	K20.01509	100	50
0730 103 124		12	70
0730 103 244	K20.01639	116	12
0730 103 244	K20.01639	132	12
0730 103 244	K20.01639	146	12
0730 103 244	K20.01639	160	12
0730 103 244	K20.01639	174	12
0730 103 244	K20.01639	190	12
0730 103 510		8	6
0730 103 846	K20.01512	124	5
0730 103 846	K20.01512	129	4
0730 103 846	K20.01512	130	4
0730 103 846	K20.01512	138	5
0730 103 846	K20.01512	144	4
0730 103 846	K20.01512	154	5
0730 103 846	K20.01512	156	4
0730 103 846	K20.01512	157	4
0730 103 846	K20.01512	168	5
0730 103 846	K20.01512	170	4
0730 103 846	K20.01512	171	4
0730 103 846	K20.01512	182	5
0730 103 846	K20.01512	186	4
0730 103 846	K20.01512	187	4
0730 103 846	K20.01512	198	5
0730 103 846	K20.01512	202	4
0730 103 846	K20.01512	203	4
0730 103 846	K20.01512	232	5
0730 103 846	K20.01512	236	4
0730 103 935	K20.01553	116	12
0730 103 935	K20.01553	132	12
0730 103 935	K20.01553	146	12
0730 103 935	K20.01553	160	12
0730 103 935	K20.01553	174	12
0730 103 935	K20.01553	190	12
0730 103 937	K20.01551	116	12
0730 103 937	K20.01551	132	12
0730 103 937	K20.01551	146	12
0730 103 937	K20.01551	160	12
0730 103 937	K20.01551	174	12
0730 103 937	K20.01551	190	12
0730 103 939	K20.01549	116	12
0730 103 939	K20.01549	132	12
0730 103 939	K20.01549	146	12
0730 103 939	K20.01549	160	12
0730 103 939	K20.01549	174	12
0730 103 939	K20.01549	190	12
0730 103 941	K20.01643	116	12
0730 103 941	K20.01643	132	12
0730 103 941	K20.01643	146	12
0730 103 941	K20.01643	160	12
0730 103 941	K20.01643	174	12
0730 103 941	K20.01643	190	12
0730 104 302		42	62
0730 104 303		42	62
0730 104 337	K20.01641	116	12
0730 104 337	K20.01641	132	12
0730 104 337	K20.01641	146	12
0730 104 337	K20.01641	160	12
0730 104 337	K20.01641	174	12
0730 104 337	K20.01641	190	12
0730 104 627		130	2
0730 104 627		158	2
0730 104 627		172	2
0730 104 627		188	2
0730 104 627		204	2
0730 104 627		220	2
0730 104 627		238	2
0730 104 627		251	2
0730 104 627		268	2
0730 104 627		285	2
0730 104 627		309	2
0730 104 627		326	2
0730 104 627		343	2
0730 104 627		366	2
0730 104 628		130	4
0730 104 628		158	4
0730 104 628		172	4
0730 104 628		188	4
0730 104 628		204	4
0730 104 628		220	4
0730 104 628		238	4
0730 104 628		251	4
0730 104 628		268	4
0730 104 628		285	4
0730 104 628		309	4
0730 104 628		326	4
0730 104 628		343	4
0730 104 628		366	4
0730 105 043		144	2
0730 105 154	K20.01546	116	9
0730 105 154	K20.01546	132	9
0730 105 154	K20.01546	146	9
0730 105 154	K20.01546	160	9
0730 105 154	K20.01546	174	9
0730 105 154	K20.01546	190	9
0730 105 155	K20.01544	116	9
0730 105 155	K20.01544	132	9
0730 105 155	K20.01544	146	9
0730 105 155	K20.01544	160	9
0730 105 155	K20.01544	174	9
0730 105 155	K20.01544	190	9
0730 105 156	K20.01542	116	9
0730 105 156	K20.01542	132	9
0730 105 156	K20.01542	146	9
0730 105 156	K20.01542	160	9
0730 105 156	K20.01542	174	9
0730 105 156	K20.01542	190	9
0730 106 158	K20.01560	118	40
0730 106 158	K20.01560	148	40
0730 106 158	K20.01560	176	40
0730 106 158	K20.01560	206	9
0730 106 158	K20.01560	222	9
0730 106 158	K20.01560	240	10
0730 106 160	K20.01558	118	40
0730 106 160	K20.01558	148	40
0730 106 160	K20.01558	176	40
0730 106 160	K20.01558	206	9
0730 106 160	K20.01558	222	9
0730 106 160	K20.01558	240	10
0730 106 162	K20.01556	118	40
0730 106 162	K20.01556	148	40
0730 106 162	K20.01556	176	40
0730 106 162	K20.01556	206	9
0730 106 162	K20.01556	222	9
0730 106 162	K20.01556	240	10
0730 106 164	K20.01667	206	9
0730 106 164	K20.01667	222	9
0730 106 164	K20.01667	240	10
0730 106 166	K20.01665	206	9
0730 106 166	K20.01665	222	9
0730 106 166	K20.01665	240	10
0730 106 168	K20.01663	206	9
0730 106 168	K20.01663	222	9
0730 106 168	K20.01663	240	10
0730 106 496	K20.01721	42	57
0730 106 656		42	62
0730 106 905	K20.01677	228	77
0730 106 905	K20.01677	246	79
0730 106 906	K20.01739	262	91
0730 106 906	K20.01739	278	75
0730 106 906	K20.01739	302	82
0730 106 906	K20.01739	320	91
0730 106 906	K20.01739	336	75
0730 106 906	K20.01739	358	75
0730 106 909	K20.01675	228	77

Original parts names, oem numbers, symbols and descriptions used in this catalogue are for reference purposes only.

OEM NO	KAÇMAZ NO	PAGE	FIG
0730 106 909	K20.01675	244	79
0730 106 909	K20.01675	278	75
0730 106 909	K20.01675	262	91
0730 106 909	K20.01675	302	82
0730 106 909	K20.01675	318	91
0730 106 909	K20.01675	336	75
0730 106 909	K20.01675	358	75
0730 106 911	K20.01749	262	91
0730 106 911	K20.01749	278	75
0730 106 911	K20.01749	302	82
0730 106 911	K20.01749	318	91
0730 106 911	K20.01749	336	75
0730 106 911	K20.01749	358	75
0730 106 913	K20.01750	262	91
0730 106 913	K20.01750	278	75
0730 106 913	K20.01750	302	82
0730 106 913	K20.01750	318	91
0730 106 913	K20.01750	336	75
0730 106 913	K20.01750	358	75
0730 106 915	K20.01751	262	91
0730 106 915	K20.01751	278	75
0730 106 915	K20.01751	302	82
0730 106 915	K20.01751	318	91
0730 106 915	K20.01751	336	75
0730 106 915	K20.01751	358	75
0730 106 916		262	91
0730 106 916		278	75
0730 106 916		302	82
0730 106 916		318	91
0730 106 916		336	75
0730 106 916		358	75
0730 106 917	K20.01674	228	77
0730 106 917	K20.01674	244	79
0730 106 917	K20.01674	260	91
0730 106 917	K20.01674	278	75
0730 106 917	K20.01674	302	82
0730 106 917	K20.01674	318	91
0730 106 917	K20.01674	336	75
0730 106 917	K20.01674	358	75
0730 107 019	K20.01570	210	43
0730 107 019	K20.01570	226	42
0730 107 019	K20.01570	242	43
0730 107 019	K20.01570	258	50
0730 107 019	K20.01570	274	37
0730 107 019	K20.01570	298	37
0730 107 019	K20.01570	316	50
0730 107 019	K20.01570	332	37
0730 107 019	K20.01570	354	37
0730 107 019	K20.01570	372	49
0730 107 020	K20.01568	210	43
0730 107 020	K20.01568	226	42
0730 107 020	K20.01568	242	43
0730 107 020	K20.01568	258	50
0730 107 020	K20.01568	274	37
0730 107 020	K20.01568	298	37
0730 107 020	K20.01568	316	50
0730 107 020	K20.01568	332	37
0730 107 020	K20.01568	354	37
0730 107 020	K20.01568	372	49
0730 107 021	K20.01566	210	43
0730 107 021	K20.01566	224	42
0730 107 021	K20.01566	242	43
0730 107 021	K20.01566	258	50
0730 107 021	K20.01566	274	37
0730 107 021	K20.01566	298	37
0730 107 021	K20.01566	316	50
0730 107 021	K20.01566	332	37
0730 107 021	K20.01566	354	37
0730 107 021	K20.01566	372	49
0730 107 022	K20.01564	210	43
0730 107 022	K20.01564	224	42
0730 107 022	K20.01564	242	43
0730 107 022	K20.01564	258	50
0730 107 022	K20.01564	274	37
0730 107 022	K20.01564	298	37
0730 107 022	K20.01564	316	50
0730 107 022	K20.01564	332	37
0730 107 022	K20.01564	354	37
0730 107 022	K20.01564	372	49
0730 107 023	K20.01562	210	43
0730 107 023	K20.01562	224	42
0730 107 023	K20.01562	242	43
0730 107 023	K20.01562	258	50
0730 107 023	K20.01562	274	37
0730 107 023	K20.01562	298	37
0730 107 023	K20.01562	316	50
0730 107 023	K20.01562	332	37
0730 107 023	K20.01562	354	37
0730 107 023	K20.01562	372	49
0730 107 168	K20.01514	198	5
0730 107 168	K20.01514	216	5
0730 107 168	K20.01514	232	5
0730 107 168	K20.01514	248	7
0730 107 168	K20.01514	264	7
0730 107 168	K20.01514	280	7
0730 107 168	K20.01514	304	7
0730 107 168	K20.01514	322	7
0730 107 541	K20.01631	90	26
0730 107 542	K20.01630	90	26
0730 107 543	K20.01629	90	26
0730 107 544	K20.01628	90	26
0730 107 545	K20.01627	90	26
0730 108 139	K20.01577	256	28
0730 108 139	K20.01577	314	28
0730 108 141	K20.01575	256	28
0730 108 141	K20.01575	314	28
0730 108 143	K20.01573	256	28
0730 108 143	K20.01573	314	28
0730 108 145	K20.01588	256	28
0730 108 145	K20.01588	314	28
0730 108 147	K20.01590	256	28
0730 108 147	K20.01590	314	28
0730 108 172	K20.01720	40	31
0730 108 414		42	62
0730 109 309	K20.01516	338	7
0730 109 309	K20.01516	378	8
0730 109 323	K20.01515	338	8
0730 109 323	K20.01515	360	12
0730 109 323	K20.01515	378	7
0730 109 323	K20.01515	396	24
0730 109 323	K20.01515	408	24
0730 109 640	K20.02105	398	27
0730 109 640	K20.02105	408	27
0730 109 641	K20.02193	392	34
0730 109 641	K20.02193	404	34
0730 110 034		372	34
0730 110 034		372	35
0730 110 035		372	34
0730 110 036		372	34
0730 110 037		372	34
0730 110 392		390	14
0730 110 392		402	14
0730 110 908		372	32
0730 111 066	K20.02194	392	25
0730 111 066	K20.02194	404	25
0730 112 265	K20.01708	2	20
0730 150 064	K20.01655	122	82
0730 150 064	K20.01655	136	82
0730 150 064	K20.01655	152	84
0730 150 064	K20.01655	166	83
0730 150 064	K20.01655	180	84
0730 150 064	K20.01655	196	83
0730 150 064	K20.01655	214	89
0730 150 064	K20.01655	230	86
0730 150 064	K20.01655	246	88
0730 150 766	K20.01530	254	24
0730 150 766	K20.01530	272	20

Original parts names, oem numbers, symbols and descriptions used in this catalogue are for reference purposes only.

OEM NO	KAÇMAZ NO	PAGE	FIG
0730 150 766	K20.01530	296	20
0730 150 766	K20.01530	312	24
0730 150 766	K20.01530	330	20
0730 150 766	K20.01530	352	20
0730 150 766	K20.01530	370	11
0730 150 766	K20.01530	383	2
0730 150 766	K20.01530	384	2
0730 150 766	K20.01530	385	2
0730 150 767	K20.01508	30	7
0730 150 767	K20.01508	44	8
0730 150 767	K20.01508	58	7
0730 150 767	K20.01508	60	50
0730 150 767	K20.01508	78	8
0730 150 767	K20.01508	98	7
0730 150 767	K20.01508	100	49
0730 160 344	K20.02066	10	55
0730 161 354	K20.01707	2	9
0730 162 428	K20.00749	40	34
0730 162 694		46	42
0730 162 753	K20.00969	16	27
0730 162 801	K20.01579	360	13
0730 162 804	K20.01971	396	19
0730 162 804	K20.01971	408	19
0730 260 396		254	14
0730 260 396		312	14
0730 260 703	K20.01740	411	17
0730 300 005		8	22
0730 300 430		52	41
0730 300 430		74	49
0730 300 430		92	67
0730 300 745	K20.01796	370	12
0730 300 745	K20.01796	383	3
0730 300 745	K20.01796	384	3
0730 300 745	K20.01796	385	3
0730 301 956		372	34
0730 302 523	K20.02085	396	3
0730 302 523	K20.02085	408	3
0730 303 670		396	13
0730 361 046		8	5
0730 501 233		90	41
0730 501 239		90	41
0730 501 295		94	77
0730 501 297		94	77
0730 501 354	K20.02199	88	7
0730 501 356	K20.02190	88	7
0730 501 356	K20.02190	390	10
0730 501 356	K20.02190	402	10
0730 501 358	K20.02191	88	7
0730 501 358	K20.02191	390	10
0730 501 358	K20.02191	402	10
0730 501 360	K20.02192	88	7
0730 501 360	K20.02192	107	2
0730 501 360	K20.02192	108	2
0730 501 360	K20.02192	109	2
0730 501 360	K20.02192	110	2
0730 501 360	K20.02192	111	2
0730 501 360	K20.02192	112	2
0730 501 360	K20.02192	390	10
0730 501 360	K20.02192	402	10
0730 501 399		38	12
0730 501 409		40	36
0730 501 418		40	36
0730 501 489		42	64
0730 501 493		42	64
0730 501 495		94	77
0730 501 496		94	77
0730 501 499		42	59
0730 501 501		38	12
0730 501 505		44	21
0730 501 574		44	21
0730 501 577		90	41
0730 501 590	K20.02186	390	10
0730 501 590	K20.02186	402	10
0730 501 592	K20.02187	390	10
0730 501 592	K20.02187	402	10
0730 501 594	K20.02188	390	10
0730 501 594	K20.02188	402	10
0730 501 596	K20.02189	390	10
0730 501 596	K20.02189	402	10
0730 501 598	K20.01897	256	29
0730 501 598	K20.01897	272	22
0730 501 598	K20.01897	289	2
0730 501 598	K20.01897	290	2
0730 501 598	K20.01897	291	2
0730 501 598	K20.01897	292	2
0730 501 598	K20.01897	296	22
0730 501 598	K20.01897	314	29
0730 501 598	K20.01897	330	22
0730 501 598	K20.01897	347	2
0730 501 598	K20.01897	348	2
0730 501 598	K20.01897	349	2
0730 501 598	K20.01897	352	22
0730 501 598	K20.01897	370	14
0730 501 598	K20.01897	383	4
0730 501 598	K20.01897	384	4
0730 501 598	K20.01897	385	4
0730 501 729		16	26
0730 501 730		16	26
0730 501 731		16	26
0730 501 732		16	26
0730 505 053		30	14
0730 505 053		78	15
0730 505 055	K20.01656	124	10
0730 505 055	K20.01656	138	10
0730 505 055	K20.01656	154	10
0730 505 055	K20.01656	168	10
0730 505 055	K20.01656	182	10
0730 505 055	K20.01656	198	10
0730 505 055	K20.01656	216	10
0730 505 055	K20.01656	232	10
0730 505 055	K20.01656	248	12
0730 505 055	K20.01656	264	21
0730 505 055	K20.01656	322	20
0730 505 056	K20.01656	124	10
0730 505 056	K20.01656	138	10
0730 505 056	K20.01656	154	10
0730 505 056	K20.01656	168	10
0730 505 056	K20.01656	182	10
0730 505 056	K20.01656	198	10
0730 505 056	K20.01656	216	10
0730 505 056	K20.01656	232	10
0730 505 056	K20.01656	248	12
0730 505 056	K20.01656	264	21
0730 505 056	K20.01656	322	20
0730 505 140	K20.01613	58	15
0730 505 140	K20.01613	98	14
0730 505 149	K20.01723	44	15
0730 513 574		44	12
0730 513 583	K20.01690	280	11
0730 513 583	K20.01690	304	11
0730 513 583	K20.01690	338	12
0730 513 583	K20.01690	378	12
0730 513 639	K20.01700	360	18
0730 513 641		392	32
0730 513 641		404	32
0730 513 680	K20.01696	360	3
0730 513 682	K20.02085	396	3
0730 513 682	K20.02085	408	3
0730 513 744		44	12
0730 513 745	K20.02090	396	9
0730 513 745	K20.02090	408	9
0730 513 755		30	11
0730 513 755		58	12
0730 513 755		98	11
0730 513 755		264	22
0730 513 756		30	11
0730 513 756		58	12

Original parts names, oem numbers, symbols and descriptions used in this catalogue are for reference purposes only.

OEM NO	KAÇMAZ NO	PAGE	FIG
0730 513 756		98	11
0730 513 757		30	11
0730 513 757		58	12
0730 513 757		98	11
0730 513 757		264	22
0730 513 758		30	11
0730 513 758		58	12
0730 513 758		78	12
0730 513 758		98	11
0730 513 759		30	11
0730 513 759		58	12
0730 513 759		98	11
0730 513 760		30	11
0730 513 760		58	12
0730 513 760		98	11
0730 513 862		28	54
0730 513 916		322	21
0730 513 917		322	21
0730 513 973		392	27
0730 513 973		404	27
0730 514 006		392	30
0730 514 006		404	30
0730 514 007		392	30
0730 514 007		404	30
0730 514 008		392	30
0730 514 008		404	30
0730 514 009		392	30
0730 514 009		404	30
0730 514 010		392	30
0730 514 010		404	30
0730 514 011		392	30
0730 514 011		404	30
0731 201 702	K20.02176	411	3
0731 201 732	K20.02180	411	14
0731 208 242		394	54
0731 208 242		406	55
0732 040 385	K20.00469	30	19
0732 040 385	K20.00469	58	20
0732 040 385	K20.00469	78	20
0732 040 385	K20.00469	88	20
0732 040 385	K20.00469	98	19
0732 040 385	K20.00469	103	3
0732 040 385	K20.00469	107	10
0732 040 385	K20.00469	108	10
0732 040 385	K20.00469	109	10
0732 040 385	K20.00469	110	10
0732 040 385	K20.00469	111	10
0732 040 385	K20.00469	112	10
0732 040 385	K20.00469	118	33
0732 040 385	K20.00469	124	14
0732 040 385	K20.00469	127	3
0732 040 385	K20.00469	127	2
0732 040 385	K20.00469	127	4
0732 040 385	K20.00469	128	2
0732 040 385	K20.00469	128	3
0732 040 385	K20.00469	128	4
0732 040 385	K20.00469	129	3
0732 040 385	K20.00469	129	4
0732 040 385	K20.00469	134	33
0732 040 385	K20.00469	138	14
0732 040 385	K20.00469	141	3
0732 040 385	K20.00469	142	3
0732 040 385	K20.00469	143	3
0732 040 385	K20.00469	143	4
0732 040 385	K20.00469	148	33
0732 040 385	K20.00469	154	14
0732 040 385	K20.00469	155	3
0732 040 385	K20.00469	155	2
0732 040 385	K20.00469	155	4
0732 040 385	K20.00469	156	2
0732 040 385	K20.00469	156	3
0732 040 385	K20.00469	156	4
0732 040 385	K20.00469	157	3
0732 040 385	K20.00469	157	4
0732 040 385	K20.00469	162	33
0732 040 385	K20.00469	168	14
0732 040 385	K20.00469	169	3
0732 040 385	K20.00469	171	3
0732 040 385	K20.00469	171	4
0732 040 385	K20.00469	176	33
0732 040 385	K20.00469	182	14
0732 040 385	K20.00469	185	3
0732 040 385	K20.00469	185	2
0732 040 385	K20.00469	185	3
0732 040 385	K20.00469	185	4
0732 040 385	K20.00469	186	2
0732 040 385	K20.00469	186	3
0732 040 385	K20.00469	186	4
0732 040 385	K20.00469	187	3
0732 040 385	K20.00469	187	4
0732 040 385	K20.00469	192	33
0732 040 385	K20.00469	198	14
0732 040 385	K20.00469	201	3
0732 040 385	K20.00469	203	3
0732 040 385	K20.00469	203	4
0732 040 385	K20.00469	216	14
0732 040 385	K20.00469	219	3
0732 040 385	K20.00469	220	3
0732 040 385	K20.00469	232	14
0732 040 385	K20.00469	237	3
0732 040 385	K20.00469	248	16
0732 040 385	K20.00469	250	3
0732 040 385	K20.00469	264	30
0732 040 385	K20.00469	268	3
0732 040 385	K20.00469	280	17
0732 040 385	K20.00469	284	3
0732 040 385	K20.00469	284	4
0732 040 385	K20.00469	285	3
0732 040 385	K20.00469	285	4
0732 040 385	K20.00469	304	17
0732 040 385	K20.00469	308	3
0732 040 385	K20.00469	309	4
0732 040 385	K20.00469	309	3
0732 040 385	K20.00469	322	29
0732 040 385	K20.00469	326	3
0732 040 385	K20.00469	338	18
0732 040 385	K20.00469	342	3
0732 040 385	K20.00469	342	4
0732 040 385	K20.00469	343	3
0732 040 385	K20.00469	343	4
0732 040 385	K20.00469	360	24
0732 040 385	K20.00469	365	3
0732 040 385	K20.00469	366	3
0732 040 385	K20.00469	366	4
0732 040 385	K20.00469	378	18
0732 040 385	K20.00469	381	3
0732 040 385	K20.00469	390	22
0732 040 385	K20.00469	404	22
0732 040 386	K20.00470	30	20
0732 040 386	K20.00470	58	21
0732 040 386	K20.00470	78	21
0732 040 386	K20.00470	88	19
0732 040 386	K20.00470	98	20
0732 040 386	K20.00470	103	4
0732 040 386	K20.00470	107	11
0732 040 386	K20.00470	108	11
0732 040 386	K20.00470	109	11
0732 040 386	K20.00470	110	11
0732 040 386	K20.00470	111	11
0732 040 386	K20.00470	112	11
0732 040 386	K20.00470	118	34
0732 040 386	K20.00470	124	15
0732 040 386	K20.00470	127	4
0732 040 386	K20.00470	127	3
0732 040 386	K20.00470	127	5
0732 040 386	K20.00470	128	3
0732 040 386	K20.00470	128	4

OEM NO	KAÇMAZ NO	PAGE	FIG
0732 040 386	K20.00470	128	5
0732 040 386	K20.00470	129	4
0732 040 386	K20.00470	129	5
0732 040 386	K20.00470	134	34
0732 040 386	K20.00470	138	15
0732 040 386	K20.00470	141	4
0732 040 386	K20.00470	142	4
0732 040 386	K20.00470	143	4
0732 040 386	K20.00470	143	5
0732 040 386	K20.00470	148	34
0732 040 386	K20.00470	154	15
0732 040 386	K20.00470	155	4
0732 040 386	K20.00470	155	3
0732 040 386	K20.00470	155	5
0732 040 386	K20.00470	156	3
0732 040 386	K20.00470	156	4
0732 040 386	K20.00470	156	5
0732 040 386	K20.00470	157	4
0732 040 386	K20.00470	157	5
0732 040 386	K20.00470	162	34
0732 040 386	K20.00470	168	15
0732 040 386	K20.00470	169	4
0732 040 386	K20.00470	171	4
0732 040 386	K20.00470	171	5
0732 040 386	K20.00470	176	34
0732 040 386	K20.00470	182	15
0732 040 386	K20.00470	185	4
0732 040 386	K20.00470	185	3
0732 040 386	K20.00470	185	5
0732 040 386	K20.00470	186	3
0732 040 386	K20.00470	186	4
0732 040 386	K20.00470	186	5
0732 040 386	K20.00470	187	4
0732 040 386	K20.00470	187	5
0732 040 386	K20.00470	192	34
0732 040 386	K20.00470	198	15
0732 040 386	K20.00470	201	4
0732 040 386	K20.00470	203	4
0732 040 386	K20.00470	203	5
0732 040 386	K20.00470	216	15
0732 040 386	K20.00470	219	4
0732 040 386	K20.00470	220	4
0732 040 386	K20.00470	232	15
0732 040 386	K20.00470	237	4
0732 040 386	K20.00470	248	17
0732 040 386	K20.00470	250	4
0732 040 386	K20.00470	264	29
0732 040 386	K20.00470	268	4
0732 040 386	K20.00470	280	18
0732 040 386	K20.00470	284	4
0732 040 386	K20.00470	284	5
0732 040 386	K20.00470	285	4
0732 040 386	K20.00470	285	5
0732 040 386	K20.00470	304	18
0732 040 386	K20.00470	308	4
0732 040 386	K20.00470	309	5
0732 040 386	K20.00470	309	4
0732 040 386	K20.00470	322	28
0732 040 386	K20.00470	326	4
0732 040 386	K20.00470	338	19
0732 040 386	K20.00470	342	4
0732 040 386	K20.00470	342	5
0732 040 386	K20.00470	343	4
0732 040 386	K20.00470	343	5
0732 040 386	K20.00470	360	25
0732 040 386	K20.00470	365	4
0732 040 386	K20.00470	366	4
0732 040 386	K20.00470	366	5
0732 040 386	K20.00470	378	19
0732 040 386	K20.00470	381	4
0732 040 409	K20.00110	4	40
0732 040 409	K20.00110	8	17
0732 040 409	K20.00110	14	17
0732 040 409	K20.00110	19	4
0732 040 409	K20.00110	19	5
0732 040 409	K20.00110	20	4
0732 040 409	K20.00110	20	5
0732 040 409	K20.00110	24	23
0732 040 409	K20.00110	35	4
0732 040 409	K20.00110	35	3
0732 040 409	K20.00110	44	19
0732 040 409	K20.00110	50	16
0732 040 409	K20.00110	52	32
0732 040 409	K20.00110	63	2
0732 040 409	K20.00110	63	3
0732 040 409	K20.00110	63	4
0732 040 409	K20.00110	64	4
0732 040 409	K20.00110	65	9
0732 040 409	K20.00110	65	21
0732 040 409	K20.00110	66	9
0732 040 409	K20.00110	66	21
0732 040 409	K20.00110	67	9
0732 040 409	K20.00110	67	21
0732 040 409	K20.00110	74	28
0732 040 409	K20.00110	81	6
0732 040 409	K20.00110	81	5
0732 040 409	K20.00110	81	4
0732 040 409	K20.00110	82	10
0732 040 409	K20.00110	83	10
0732 040 409	K20.00110	92	45
0732 040 409	K20.00110	92	58
0732 040 409	K20.00110	103	2
0732 040 409	K20.00110	103	3
0732 040 409	K20.00110	103	4
0732 040 409	K20.00110	104	4
0732 040 409	K20.00110	105	14
0732 040 409	K20.00110	105	25
0732 040 409	K20.00110	106	14
0732 040 409	K20.00110	106	25
0732 040 409	K20.00110	134	45
0732 040 409	K20.00110	141	3
0732 040 409	K20.00110	141	4
0732 040 409	K20.00110	141	5
0732 040 409	K20.00110	142	3
0732 040 409	K20.00110	142	4
0732 040 409	K20.00110	142	5
0732 040 409	K20.00110	162	45
0732 040 409	K20.00110	169	3
0732 040 409	K20.00110	169	4
0732 040 409	K20.00110	169	5
0732 040 409	K20.00110	170	3
0732 040 409	K20.00110	170	4
0732 040 409	K20.00110	170	5
0732 040 409	K20.00110	192	45
0732 040 409	K20.00110	201	3
0732 040 409	K20.00110	201	4
0732 040 409	K20.00110	201	5
0732 040 409	K20.00110	202	3
0732 040 409	K20.00110	202	4
0732 040 409	K20.00110	202	5
0732 040 409	K20.00110	208	31
0732 040 409	K20.00110	217	4
0732 040 409	K20.00110	217	3
0732 040 409	K20.00110	217	5
0732 040 409	K20.00110	218	5
0732 040 409	K20.00110	218	4
0732 040 409	K20.00110	218	3
0732 040 409	K20.00110	219	5
0732 040 409	K20.00110	219	8
0732 040 409	K20.00110	224	31
0732 040 409	K20.00110	235	4
0732 040 409	K20.00110	235	3
0732 040 409	K20.00110	235	4
0732 040 409	K20.00110	235	5
0732 040 409	K20.00110	236	5
0732 040 409	K20.00110	236	4
0732 040 409	K20.00110	236	8

Original parts names, oem numbers, symbols and descriptions used in this catalogue are for reference purposes only.

OEM NO	KAÇMAZ NO	PAGE	FIG
0732 040 409	K20.00110	242	32
0732 040 409	K20.00110	249	4
0732 040 409	K20.00110	249	5
0732 040 409	K20.00110	250	5
0732 040 409	K20.00110	250	8
0732 040 409	K20.00110	256	40
0732 040 409	K20.00110	267	4
0732 040 409	K20.00110	267	5
0732 040 409	K20.00110	267	3
0732 040 409	K20.00110	268	5
0732 040 409	K20.00110	268	8
0732 040 409	K20.00110	274	29
0732 040 409	K20.00110	283	4
0732 040 409	K20.00110	283	5
0732 040 409	K20.00110	284	4
0732 040 409	K20.00110	284	5
0732 040 409	K20.00110	287	13
0732 040 409	K20.00110	288	13
0732 040 409	K20.00110	289	9
0732 040 409	K20.00110	290	9
0732 040 409	K20.00110	291	9
0732 040 409	K20.00110	292	9
0732 040 409	K20.00110	298	28
0732 040 409	K20.00110	307	4
0732 040 409	K20.00110	307	5
0732 040 409	K20.00110	308	5
0732 040 409	K20.00110	308	8
0732 040 409	K20.00110	314	40
0732 040 409	K20.00110	325	4
0732 040 409	K20.00110	325	3
0732 040 409	K20.00110	325	5
0732 040 409	K20.00110	326	5
0732 040 409	K20.00110	326	8
0732 040 409	K20.00110	332	29
0732 040 409	K20.00110	341	4
0732 040 409	K20.00110	341	5
0732 040 409	K20.00110	342	5
0732 040 409	K20.00110	345	13
0732 040 409	K20.00110	346	13
0732 040 409	K20.00110	347	9
0732 040 409	K20.00110	348	9
0732 040 409	K20.00110	349	9
0732 040 409	K20.00110	354	29
0732 040 409	K20.00110	363	4
0732 040 409	K20.00110	363	3
0732 040 409	K20.00110	363	5
0732 040 409	K20.00110	364	4
0732 040 409	K20.00110	364	5
0732 040 409	K20.00110	364	3
0732 040 409	K20.00110	365	8
0732 040 409	K20.00110	365	4
0732 040 409	K20.00110	365	5
0732 040 409	K20.00110	370	23
0732 040 409	K20.00110	381	5
0732 040 409	K20.00110	381	4
0732 040 409	K20.00110	382	13
0732 040 409	K20.00110	383	11
0732 040 409	K20.00110	384	11
0732 040 409	K20.00110	385	11
0732 040 929	K20.01970	396	18
0732 040 929	K20.01970	408	18
0732 041 500	K20.02175	411	2
0732 041 571	K20.00737	40	18
0732 041 571	K20.00737	47	6
0732 041 571	K20.00737	47	5
0732 041 571	K20.00737	48	5
0732 042 510	K20.00681	2	13
0732 042 766		394	53
0732 042 766		406	54
0734 300 140	K20.01005	118	36
0734 300 140	K20.01005	148	36
0734 300 140	K20.01005	176	36
0734 300 140	K20.01005	208	36
0734 300 196	K20.01037	269	1
0734 300 196	K20.01037	286	1
0734 300 196	K20.01037	310	1
0734 300 196	K20.01037	327	1
0734 300 196	K20.01037	344	1
0734 300 196	K20.01037	367	1
0734 300 421	K20.01022	60	42
0734 300 421	K20.01022	80	44
0734 300 421	K20.01022	100	41
0734 300 421	K20.01022	266	41
0734 300 421	K20.01022	282	42
0734 300 421	K20.01022	306	42
0734 300 421	K20.01022	324	40
0734 300 421	K20.01022	340	43
0734 300 421	K20.01022	380	42
0734 300 421	K20.01022	398	35
0734 300 421	K20.01022	410	35
0734 303 046		269	19
0734 303 046		286	19
0734 303 046		310	19
0734 303 046		327	19
0734 303 046		344	19
0734 303 046		367	19
0734 307 280	K20.01019	269	3
0734 307 280	K20.01019	280	29
0734 307 280	K20.01019	286	3
0734 307 280	K20.01019	304	29
0734 307 280	K20.01019	310	3
0734 307 280	K20.01019	327	3
0734 307 280	K20.01019	338	30
0734 307 280	K20.01019	344	3
0734 307 280	K20.01019	360	31
0734 307 280	K20.01019	367	3
0734 307 280	K20.01019	378	30
0734 307 287	K20.01018	30	28
0734 307 287	K20.01018	58	31
0734 307 287	K20.01018	78	30
0734 307 287	K20.01018	100	30
0734 307 294	K20.01019	269	3
0734 307 294	K20.01019	280	29
0734 307 294	K20.01019	286	3
0734 307 294	K20.01019	304	29
0734 307 294	K20.01019	310	3
0734 307 294	K20.01019	327	3
0734 307 294	K20.01019	338	30
0734 307 294	K20.01019	344	3
0734 307 294	K20.01019	360	31
0734 307 294	K20.01019	367	3
0734 307 294	K20.01019	378	30
0734 307 296	K20.01023	34	58
0734 307 296	K20.01023	62	64
0734 307 296	K20.01023	102	64
0734 309 376	K20.01038	269	7
0734 309 376	K20.01038	286	7
0734 309 376	K20.01038	310	7
0734 309 376	K20.01038	327	7
0734 309 376	K20.01038	344	7
0734 309 376	K20.01038	367	7
0734 309 376	K20.01038	411	18
0734 309 377		44	27
0734 309 765	K20.01038	269	7
0734 309 765	K20.01038	286	7
0734 309 765	K20.01038	310	7
0734 309 765	K20.01038	327	7
0734 309 765	K20.01038	344	7
0734 309 765	K20.01038	367	7
0734 309 765	K20.01038	411	18
0734 310 104	K20.01008	22	8
0734 310 104	K20.01008	36	3
0734 310 104	K20.01008	72	3
0734 310 104	K20.01008	269	3
0734 310 104	K20.01008	272	4
0734 310 104	K20.01008	286	3
0734 310 104	K20.01008	310	3

OEM NO	KAÇMAZ NO	PAGE	FIG
0734 310 104	K20.01008	327	3
0734 310 104	K20.01008	330	4
0734 310 104	K20.01008	344	3
0734 310 104	K20.01008	352	4
0734 310 104	K20.01008	367	3
0734 310 108		8	2
0734 310 109		10	65
0734 310 111		8	2
0734 310 161	K20.01001	2	3
0734 310 161	K20.01001	22	8
0734 310 161	K20.01001	38	2
0734 310 161	K20.01001	50	2
0734 310 161	K20.01001	88	4
0734 310 212		32	40
0734 310 311	K20.01003	269	6
0734 310 311	K20.01003	286	6
0734 310 311	K20.01003	310	6
0734 310 311	K20.01003	327	6
0734 310 311	K20.01003	344	6
0734 310 311	K20.01003	367	6
0734 310 386	K20.01003	14	3
0734 310 386	K20.01003	146	2
0734 310 386	K20.01003	174	2
0734 310 386	K20.01003	190	2
0734 310 386	K20.01003	222	2
0734 310 386	K20.01003	240	3
0734 310 386	K20.01003	254	7
0734 310 386	K20.01003	272	4
0734 310 386	K20.01003	296	4
0734 310 386	K20.01003	312	7
0734 310 386	K20.01003	330	4
0734 310 386	K20.01003	352	4
0734 310 387	K20.01003	14	3
0734 310 387	K20.01003	116	2
0734 310 387	K20.01003	146	2
0734 310 387	K20.01003	174	2
0734 310 387	K20.01003	190	2
0734 310 387	K20.01003	206	2
0734 310 387	K20.01003	222	2
0734 310 387	K20.01003	240	3
0734 310 387	K20.01003	254	7
0734 310 387	K20.01003	269	6
0734 310 387	K20.01003	272	4
0734 310 387	K20.01003	286	6
0734 310 387	K20.01003	296	4
0734 310 387	K20.01003	310	6
0734 310 387	K20.01003	312	7
0734 310 387	K20.01003	327	6
0734 310 387	K20.01003	330	4
0734 310 387	K20.01003	344	6
0734 310 387	K20.01003	352	4
0734 310 387	K20.01003	367	6
0734 310 435	K20.01032	370	3
0734 317 150	K20.01024	124	21
0734 317 150	K20.01024	138	21
0734 317 150	K20.01024	154	21
0734 317 150	K20.01024	168	21
0734 317 150	K20.01024	182	21
0734 317 150	K20.01024	198	21
0734 317 150	K20.01024	216	21
0734 317 150	K20.01024	232	21
0734 317 150	K20.01024	264	13
0734 317 150	K20.01024	269	4
0734 317 150	K20.01024	286	4
0734 317 150	K20.01024	310	4
0734 317 150	K20.01024	322	13
0734 317 150	K20.01024	327	4
0734 317 150	K20.01024	344	4
0734 317 150	K20.01024	367	4
0734 319 276	K20.01007	224	36
0734 319 276	K20.01007	242	37
0734 319 439	K20.01012	32	40
0734 319 439	K20.01012	36	4
0734 319 439	K20.01012	60	42
0734 319 439	K20.01012	100	41
0734 319 459	K20.01022	60	42
0734 319 459	K20.01022	80	44
0734 319 459	K20.01022	100	41
0734 319 459	K20.01022	266	41
0734 319 459	K20.01022	282	42
0734 319 459	K20.01022	306	42
0734 319 459	K20.01022	324	40
0734 319 459	K20.01022	340	43
0734 319 459	K20.01022	380	42
0734 319 459	K20.01022	398	35
0734 319 459	K20.01022	410	35
0734 319 513		18	68
0734 319 551	K20.01013	269	8
0734 319 551	K20.01013	286	8
0734 319 551	K20.01013	310	8
0734 319 551	K20.01013	327	8
0734 319 551	K20.01013	344	8
0734 319 551	K20.01013	367	8
0734 319 559	K20.01030	144	12
0734 319 687	K20.01029	46	46
0734 319 847		390	3
0734 319 847		402	3
0735 117 778	K20.01470	12	77
0735 295 067	K20.02170	282	54
0735 295 067	K20.02170	306	54
0735 295 067	K20.02170	340	55
0735 295 119	K20.01707	2	9
0735 295 148	K20.02078	16	46
0735 298 169	K20.01332	280	23
0735 298 169	K20.01332	304	23
0735 298 169	K20.01332	338	24
0735 298 169	K20.01332	378	24
0735 300 511	K20.01146	18	60
0735 300 511	K20.01146	42	58
0735 300 740	K20.01136	38	6
0735 300 740	K20.01136	224	37
0735 301 274	K20.01474	392	26
0735 301 274	K20.01474	404	26
0735 301 881	K20.01473	392	33
0735 301 881	K20.01473	404	33
0735 320 042	K20.01335	122	80
0735 320 042	K20.01335	136	80
0735 320 042	K20.01335	152	82
0735 320 042	K20.01335	166	81
0735 320 042	K20.01335	180	82
0735 320 042	K20.01335	196	81
0735 320 042	K20.01335	214	87
0735 320 154		10	56
0735 320 378		24	33
0735 320 407	K20.01471	8	29
0735 320 418	K20.01312	120	51
0735 320 418	K20.01312	134	50
0735 320 451	K20.01313	120	51
0735 320 451	K20.01313	134	52
0735 320 451	K20.01313	150	51
0735 320 451	K20.01313	164	50
0735 320 451	K20.01313	178	51
0735 320 451	K20.01313	194	50
0735 320 451	K20.01313	226	54
0735 320 452	K20.01318	150	53
0735 320 452	K20.01318	164	52
0735 320 452	K20.01318	178	53
0735 320 452	K20.01318	194	52
0735 320 462	K20.01316	136	63
0735 320 471		10	37
0735 320 486	K20.01320	150	65
0735 320 486	K20.01320	164	64
0735 320 486	K20.01320	178	65
0735 320 486	K20.01320	194	64
0735 320 487	K20.01319	150	61
0735 320 487	K20.01319	164	60
0735 320 487	K20.01319	178	61

Original parts names, oem numbers, symbols and descriptions used in this catalogue are for reference purposes only.

OEM NO	KAÇMAZ NO	PAGE	FIG
0735 320 487	K20.01319	194	60
0735 320 492		12	78
0735 320 496	K20.01314	120	59
0735 320 496	K20.01314	136	59
0735 320 500	K20.01308	52	46
0735 320 500	K20.01308	65	27
0735 320 500	K20.01308	66	27
0735 320 500	K20.01308	67	27
0735 320 500	K20.01308	76	54
0735 320 500	K20.01308	82	26
0735 320 500	K20.01308	83	26
0735 320 548	K20.01315	120	59
0735 320 584	K20.01311	10	39
0735 320 584	K20.01311	116	15
0735 320 584	K20.01311	132	15
0735 320 786	K20.01311	10	39
0735 320 786	K20.01311	116	15
0735 320 786	K20.01311	132	15
0735 320 816	K20.01307	52	43
0735 320 816	K20.01307	65	24
0735 320 816	K20.01307	66	24
0735 320 816	K20.01307	67	24
0735 320 816	K20.01307	76	51
0735 320 816	K20.01307	82	23
0735 320 816	K20.01307	83	23
0735 320 816	K20.01307	88	10
0735 320 816	K20.01307	105	17
0735 320 816	K20.01307	106	17
0735 320 816	K20.01307	107	4
0735 320 816	K20.01307	108	4
0735 320 816	K20.01307	109	4
0735 320 816	K20.01307	110	4
0735 320 816	K20.01307	111	4
0735 320 816	K20.01307	112	4
0735 320 822	K20.01304	52	24
0735 320 822	K20.01304	65	12
0735 320 822	K20.01304	66	12
0735 320 822	K20.01304	67	12
0735 320 837		8	26
0735 320 885	K20.01469	282	55
0735 320 885	K20.01469	306	55
0735 320 885	K20.01469	340	56
0735 320 896	K20.01317	146	15
0735 320 896	K20.01317	160	15
0735 320 896	K20.01317	174	15
0735 320 896	K20.01317	190	15
0735 320 950	K20.01325	222	12
0735 320 950	K20.01325	240	13
0735 321 011	K20.01304	52	24
0735 321 011	K20.01304	65	12
0735 321 011	K20.01304	66	12
0735 321 011	K20.01304	67	12
0735 321 012	K20.01346	40	46
0735 321 087	K20.01322	210	54
0735 321 087	K20.01322	258	58
0735 321 087	K20.01322	276	50
0735 321 087	K20.01322	287	16
0735 321 087	K20.01322	288	16
0735 321 094	K20.01326	226	56
0735 321 094	K20.01326	244	54
0735 321 094	K20.01326	300	50
0735 321 094	K20.01326	316	58
0735 321 094	K20.01326	334	50
0735 321 094	K20.01326	345	16
0735 321 094	K20.01326	346	16
0735 321 094	K20.01326	356	50
0735 321 094	K20.01326	374	62
0735 321 094	K20.01326	382	16
0735 321 103	K20.01329	228	71
0735 321 381	K20.01473	392	33
0735 321 381	K20.01473	404	33
0735 321 392		16	28
0735 321 394		16	50
0735 321 432		16	37
0735 321 437	K20.01331	256	34
0735 321 437	K20.01331	314	34
0735 321 454		394	68
0735 321 454		406	70
0735 321 478	K20.01305	52	27
0735 321 487	K20.01474	392	26
0735 321 487	K20.01474	404	26
0735 321 494	K20.01345	40	33
0735 321 527	K20.01339	2	19
0735 321 528	K20.01340	2	21
0735 321 529	K20.01341	4	30
0735 321 530	K20.01342	4	32
0735 321 531	K20.01343	4	45
0735 321 560		16	25
0735 330 137	K20.01129	34	66
0735 330 137	K20.01129	62	70
0735 330 137	K20.01129	102	70
0735 330 597	K20.01150	46	47
0735 330 615	K20.01142	4	52
0735 330 685	K20.01139	2	6
0735 330 800	K20.01140	2	6
0735 330 804		78	13
0735 340 080	K20.01334	32	49
0735 340 080	K20.01334	60	54
0735 340 080	K20.01334	102	54
0735 358 128	K20.01141	2	8
0735 358 192	K20.01333	28	65
0735 358 192	K20.01333	42	72
0735 358 192	K20.01333	56	66
0735 358 192	K20.01333	76	73
0735 358 192	K20.01333	96	87
0735 368 084		372	30
0735 370 055	K20.01124	262	93
0735 370 233	K20.01101	50	6
0735 370 233	K20.01101	68	2
0735 370 233	K20.01101	69	2
0735 370 233	K20.01101	88	9
0735 370 233	K20.01101	107	3
0735 370 233	K20.01101	108	3
0735 370 233	K20.01101	109	3
0735 370 233	K20.01101	110	3
0735 370 233	K20.01101	111	3
0735 370 233	K20.01101	112	3
0735 370 438	K20.01144	6	62
0735 370 438	K20.01144	42	69
0735 370 463	K20.01122	54	58
0735 370 463	K20.01122	94	80
0735 370 742	K20.01147	42	63
0735 371 096	K20.01154	28	55
0735 371 096	K20.01154	76	65
0735 371 096	K20.01154	86	2
0735 371 406	K20.01106	90	35
0735 371 406	K20.01106	105	4
0735 371 406	K20.01106	106	4
0735 371 563	K20.01109	14	13
0735 371 563	K20.01109	24	17
0735 371 563	K20.01109	72	21
0735 371 563	K20.01109	226	43
0735 371 563	K20.01109	258	51
0735 371 563	K20.01109	274	38
0735 371 563	K20.01109	287	3
0735 371 563	K20.01109	288	3
0735 371 563	K20.01109	298	38
0735 371 563	K20.01109	316	51
0735 371 563	K20.01109	332	38
0735 371 563	K20.01109	345	3
0735 371 563	K20.01109	346	3
0735 371 563	K20.01109	354	38
0735 371 563	K20.01109	372	50
0735 371 563	K20.01109	382	3
0735 371 599		26	49
0735 371 605	K20.01113	54	55
0735 371 605	K20.01113	65	34

Original parts names, oem numbers, symbols and descriptions used in this catalogue are for reference purposes only.

OEM NO	KAÇMAZ NO	PAGE	FIG
0735 371 605	K20.01113	66	34
0735 371 605	K20.01113	67	34
0735 371 605	K20.01113	94	76
0735 371 605	K20.01113	105	34
0735 371 605	K20.01113	106	34
0735 371 607	K20.01143	6	56
0735 371 748	K20.01105	50	11
0735 371 748	K20.01105	65	2
0735 371 748	K20.01105	66	2
0735 371 748	K20.01105	67	2
0735 371 749	K20.01122	54	58
0735 371 749	K20.01122	69	2
0735 371 749	K20.01122	70	2
0735 371 749	K20.01122	94	80
0735 371 749	K20.01122	113	3
0735 371 749	K20.01122	114	3
0735 372 156	K20.01126	262	93
0735 372 156	K20.01126	278	77
0735 372 156	K20.01126	293	3
0735 372 156	K20.01126	302	84
0735 372 156	K20.01126	320	93
0735 372 156	K20.01126	336	77
0735 372 156	K20.01126	350	3
0735 372 156	K20.01126	358	77
0735 372 156	K20.01126	376	90
0735 372 156	K20.01126	386	3
0735 410 110	K20.01137	248	1
0735 410 139		130	9
0735 410 139		158	9
0735 410 139		172	9
0735 410 139		188	9
0735 410 139		204	9
0735 410 139		220	9
0735 410 139		238	9
0735 410 139		251	9
0735 410 139		268	9
0735 410 139		285	9
0735 410 139		309	9
0735 410 139		326	9
0735 410 139		343	9
0735 410 139		366	9
0735 455 012	K20.01153	8	11
0735 455 248	K20.01111	150	46
0735 455 248	K20.01111	162	39
0735 455 248	K20.01111	178	46
0735 455 248	K20.01111	192	39
0735 455 298		372	33
0735 470 057	K20.01452	124	6
0735 470 057	K20.01452	130	5
0735 470 057	K20.01452	138	6
0735 470 057	K20.01452	144	5
0735 470 115	K20.01451	30	9
0735 470 115	K20.01451	58	9
0735 470 115	K20.01451	60	52
0735 470 115	K20.01451	78	10
0735 470 115	K20.01451	98	9
0735 470 115	K20.01451	100	51
0735 470 155	K20.01458	44	10
0735 470 164	K20.01455	216	6
0735 470 164	K20.01455	232	6
0735 470 164	K20.01455	264	8
0737 006 095	K20.01774	30	31
0737 006 095	K20.01774	44	28
0737 006 095	K20.01774	60	34
0737 006 095	K20.01774	90	29
0737 006 095	K20.01774	100	33
0737 006 095	K20.01774	118	29
0737 006 095	K20.01774	124	24
0737 006 095	K20.01774	134	29
0737 006 095	K20.01774	138	24
0737 006 095	K20.01774	148	29
0737 006 095	K20.01774	154	24
0737 006 095	K20.01774	162	29
0737 006 095	K20.01774	168	24
0737 006 095	K20.01774	176	29
0737 006 095	K20.01774	182	24
0737 006 095	K20.01774	192	29
0737 006 095	K20.01774	198	24
0737 006 095	K20.01774	208	26
0737 006 095	K20.01774	216	24
0737 006 095	K20.01774	224	26
0737 006 095	K20.01774	232	24
0737 006 095	K20.01774	242	27
0737 006 095	K20.01774	248	26
0737 006 095	K20.01774	254	19
0737 006 095	K20.01774	264	16
0737 006 095	K20.01774	272	15
0737 006 095	K20.01774	280	32
0737 006 095	K20.01774	296	15
0737 006 095	K20.01774	304	32
0737 006 095	K20.01774	312	19
0737 006 095	K20.01774	322	16
0737 006 095	K20.01774	330	15
0737 006 095	K20.01774	338	33
0737 006 095	K20.01774	352	15
0737 006 095	K20.01774	360	34
0737 300 037	K20.01774	44	28
0737 300 037	K20.01774	78	33
0737 300 037	K20.01774	372	42
0737 300 037	K20.01774	378	33
0737 502 092	K20.00485	120	45
0737 502 092	K20.00485	134	38
0737 502 092	K20.00485	150	45
0737 502 092	K20.00485	162	38
0737 502 092	K20.00485	178	45
0737 502 092	K20.00485	192	38
0750 101 158	K20.01533	274	40
0750 101 158	K20.01533	287	5
0750 101 158	K20.01533	288	5
0750 101 158	K20.01533	298	40
0750 101 158	K20.01533	332	40
0750 101 158	K20.01533	345	5
0750 101 158	K20.01533	346	5
0750 101 158	K20.01533	354	40
0750 101 158	K20.01533	374	52
0750 101 158	K20.01533	382	5
0750 101 179	K20.01011	224	35
0750 101 179	K20.01011	256	44
0750 101 179	K20.01011	274	33
0750 101 179	K20.01011	289	12
0750 101 179	K20.01011	290	12
0750 101 179	K20.01011	291	12
0750 101 179	K20.01011	292	12
0750 101 179	K20.01011	298	33
0750 101 179	K20.01011	314	44
0750 101 179	K20.01011	332	33
0750 101 179	K20.01011	347	12
0750 101 179	K20.01011	348	12
0750 101 179	K20.01011	349	12
0750 101 179	K20.01011	354	33
0750 101 179	K20.01011	372	27
0750 101 179	K20.01011	383	14
0750 101 179	K20.01011	384	14
0750 101 179	K20.01011	385	14
0750 110 074	K20.02075	10	66
0750 111 002	K20.01002	116	2
0750 111 002	K20.01002	132	2
0750 111 002	K20.01002	146	2
0750 111 002	K20.01002	160	2
0750 111 149	K20.01001	2	3
0750 111 149	K20.01001	38	2
0750 111 149	K20.01001	50	2
0750 111 149	K20.01001	88	4
0750 111 268	K20.01027	2	3
0750 111 268	K20.01027	4	54
0750 111 334	K20.01029	46	46
0750 111 341	K20.01013	126	34

Original parts names, oem numbers, symbols and descriptions used in this catalogue are for reference purposes only.

OEM NO	KAÇMAZ NO	PAGE	FIG
0750 111 341	K20.01013	130	13
0750 111 341	K20.01013	140	32
0750 111 341	K20.01013	154	32
0750 111 341	K20.01013	158	13
0750 111 341	K20.01013	168	32
0750 111 341	K20.01013	172	13
0750 111 341	K20.01013	184	34
0750 111 341	K20.01013	188	13
0750 111 341	K20.01013	200	32
0750 111 341	K20.01013	204	13
0750 111 341	K20.01013	216	34
0750 111 341	K20.01013	220	13
0750 111 341	K20.01013	234	34
0750 111 341	K20.01013	238	13
0750 111 341	K20.01013	251	13
0750 111 341	K20.01013	266	41
0750 111 341	K20.01013	268	13
0750 111 341	K20.01013	269	8
0750 111 341	K20.01013	282	42
0750 111 341	K20.01013	285	13
0750 111 341	K20.01013	286	8
0750 111 341	K20.01013	306	42
0750 111 341	K20.01013	309	13
0750 111 341	K20.01013	310	8
0750 111 341	K20.01013	324	40
0750 111 341	K20.01013	326	13
0750 111 341	K20.01013	327	8
0750 111 341	K20.01013	340	43
0750 111 341	K20.01013	343	13
0750 111 341	K20.01013	344	8
0750 111 341	K20.01013	362	45
0750 111 341	K20.01013	366	13
0750 111 341	K20.01013	367	8
0750 111 469	K20.01027	2	3
0750 111 469	K20.01027	4	54
0750 111 476		2	3
0750 112 019	K20.01024	124	21
0750 112 019	K20.01024	138	21
0750 112 019	K20.01024	154	21
0750 112 019	K20.01024	168	21
0750 112 019	K20.01024	182	21
0750 112 019	K20.01024	198	21
0750 112 019	K20.01024	216	21
0750 112 019	K20.01024	232	21
0750 112 019	K20.01024	269	4
0750 112 019	K20.01024	286	4
0750 112 019	K20.01024	310	4
0750 112 019	K20.01024	327	4
0750 112 019	K20.01024	344	4
0750 112 019	K20.01024	367	4
0750 112 034	K20.01016	118	26
0750 112 034	K20.01016	124	20
0750 112 034	K20.01016	134	26
0750 112 034	K20.01016	138	20
0750 112 034	K20.01016	148	26
0750 112 034	K20.01016	154	20
0750 112 034	K20.01016	162	26
0750 112 034	K20.01016	168	20
0750 112 034	K20.01016	176	26
0750 112 034	K20.01016	182	20
0750 112 034	K20.01016	192	26
0750 112 034	K20.01016	198	20
0750 112 034	K20.01016	208	23
0750 112 034	K20.01016	216	20
0750 112 034	K20.01016	224	23
0750 112 034	K20.01016	232	20
0750 112 034	K20.01016	242	24
0750 112 034	K20.01016	248	22
0750 112 034	K20.01016	254	16
0750 112 034	K20.01016	264	12
0750 112 034	K20.01016	269	1
0750 112 034	K20.01016	286	1
0750 112 034	K20.01016	310	1
0750 112 034	K20.01016	312	16
0750 112 034	K20.01016	322	12
0750 112 034	K20.01016	327	1
0750 112 034	K20.01016	344	1
0750 112 034	K20.01016	367	1
0750 112 047	K20.01017	30	27
0750 112 047	K20.01017	44	26
0750 112 047	K20.01017	44	32
0750 112 047	K20.01017	58	30
0750 112 047	K20.01017	78	29
0750 112 047	K20.01017	90	25
0750 112 047	K20.01017	100	29
0750 112 048		44	33
0750 112 049	K20.01023	34	58
0750 112 049	K20.01023	62	64
0750 112 049	K20.01023	102	64
0750 112 066	K20.01657	124	23
0750 112 066	K20.01657	138	23
0750 112 066	K20.01657	154	23
0750 112 066	K20.01657	168	23
0750 112 066	K20.01657	182	23
0750 112 066	K20.01657	198	23
0750 112 066	K20.01657	216	23
0750 112 066	K20.01657	232	23
0750 112 066	K20.01657	264	15
0750 112 066	K20.01657	269	6
0750 112 066	K20.01657	280	31
0750 112 066	K20.01657	286	6
0750 112 066	K20.01657	304	31
0750 112 066	K20.01657	310	6
0750 112 066	K20.01657	322	15
0750 112 066	K20.01657	327	6
0750 112 066	K20.01657	338	32
0750 112 066	K20.01657	344	6
0750 112 066	K20.01657	360	33
0750 112 066	K20.01657	367	6
0750 112 066	K20.01657	378	32
0750 112 089	K20.01021	90	28
0750 112 089	K20.01021	118	28
0750 112 089	K20.01021	134	28
0750 112 089	K20.01021	148	28
0750 112 089	K20.01021	162	28
0750 112 089	K20.01021	176	28
0750 112 089	K20.01021	192	28
0750 112 089	K20.01021	208	25
0750 112 089	K20.01021	224	25
0750 112 089	K20.01021	242	26
0750 112 096	K20.01614	30	30
0750 112 096	K20.01614	60	33
0750 112 096	K20.01614	78	32
0750 112 096	K20.01614	100	32
0750 112 096	K20.01614	232	23
0750 112 096	K20.01614	248	25
0750 112 097	K20.01025	232	21
0750 112 097	K20.01025	248	23
0750 112 131	K20.01026	269	2
0750 112 131	K20.01026	272	11
0750 112 131	K20.01026	280	28
0750 112 131	K20.01026	286	2
0750 112 131	K20.01026	296	11
0750 112 131	K20.01026	304	28
0750 112 131	K20.01026	310	2
0750 112 131	K20.01026	327	2
0750 112 131	K20.01026	330	11
0750 112 131	K20.01026	338	29
0750 112 131	K20.01026	344	2
0750 112 131	K20.01026	352	11
0750 112 131	K20.01026	360	30
0750 112 131	K20.01026	367	2
0750 112 131	K20.01026	372	40
0750 112 131	K20.01026	378	29
0750 112 177	K20.01020	254	18
0750 112 177	K20.01020	269	7
0750 112 177	K20.01020	272	14

Original parts names, oem numbers, symbols and descriptions used in this catalogue are for reference purposes only.

OEM NO	KAÇMAZ NO	PAGE	FIG
0750 112 177	K20.01020	286	7
0750 112 177	K20.01020	296	14
0750 112 177	K20.01020	310	7
0750 112 177	K20.01020	312	18
0750 112 177	K20.01020	327	7
0750 112 177	K20.01020	330	14
0750 112 177	K20.01020	344	7
0750 112 177	K20.01020	352	14
0750 112 177	K20.01020	367	7
0750 112 253	K20.01026	272	11
0750 112 253	K20.01026	280	28
0750 112 253	K20.01026	296	11
0750 112 253	K20.01026	304	28
0750 112 253	K20.01026	330	11
0750 112 253	K20.01026	338	29
0750 112 253	K20.01026	352	11
0750 112 253	K20.01026	360	30
0750 112 253	K20.01026	372	40
0750 112 253	K20.01026	378	29
0750 115 011	K20.01335	122	80
0750 115 011	K20.01335	136	80
0750 115 011	K20.01335	152	82
0750 115 011	K20.01335	166	81
0750 115 011	K20.01335	180	82
0750 115 011	K20.01335	196	81
0750 115 011	K20.01335	214	87
0750 115 059	K20.01316	120	63
0750 115 059	K20.01316	136	63
0750 115 134	K20.01471	8	29
0750 115 135	K20.01141	2	8
0750 115 223	K20.01301	90	37
0750 115 224	K20.01310	92	68
0750 115 224	K20.01310	105	28
0750 115 224	K20.01310	106	28
0750 115 225	K20.01309	26	46
0750 115 225	K20.01309	54	53
0750 115 225	K20.01309	65	32
0750 115 225	K20.01309	66	32
0750 115 225	K20.01309	67	32
0750 115 225	K20.01309	76	61
0750 115 225	K20.01309	82	30
0750 115 225	K20.01309	83	30
0750 115 225	K20.01309	94	72
0750 115 225	K20.01309	105	32
0750 115 225	K20.01309	106	32
0750 115 227	K20.01462	52	27
0750 115 227	K20.01462	65	15
0750 115 227	K20.01462	66	15
0750 115 227	K20.01462	67	15
0750 115 227	K20.01462	74	38
0750 115 227	K20.01462	82	16
0750 115 227	K20.01462	83	16
0750 115 229	K20.01333	28	65
0750 115 229	K20.01333	42	72
0750 115 229	K20.01333	56	66
0750 115 229	K20.01333	76	73
0750 115 229	K20.01333	96	87
0750 115 233		18	61
0750 115 255	K20.01336	230	84
0750 115 255	K20.01336	246	86
0750 115 283		10	52
0750 115 298	K20.01348	42	55
0750 115 299	K20.01301	90	37
0750 115 299	K20.01301	105	6
0750 115 299	K20.01301	106	6
0750 115 303	K20.01326	226	56
0750 115 303	K20.01326	244	54
0750 115 303	K20.01326	300	50
0750 115 303	K20.01326	316	58
0750 115 303	K20.01326	334	50
0750 115 303	K20.01326	345	16
0750 115 303	K20.01326	346	16
0750 115 303	K20.01326	356	50
0750 115 303	K20.01326	374	62
0750 115 303	K20.01326	382	16
0750 115 304	K20.01327	228	67
0750 115 310	K20.01321	206	12
0750 115 324	K20.01324	212	74
0750 115 324	K20.01324	260	80
0750 115 324	K20.01324	276	64
0750 115 324	K20.01324	287	29
0750 115 324	K20.01324	288	29
0750 115 325	K20.01323	212	70
0750 115 325	K20.01323	260	76
0750 115 325	K20.01323	276	60
0750 115 325	K20.01323	287	25
0750 115 325	K20.01323	288	25
0750 115 326	K20.01330	228	71
0750 115 326	K20.01330	244	74
0750 115 326	K20.01330	300	71
0750 115 326	K20.01330	318	80
0750 115 326	K20.01330	334	64
0750 115 326	K20.01330	345	29
0750 115 326	K20.01330	346	29
0750 115 326	K20.01330	356	64
0750 115 326	K20.01330	376	83
0750 115 326	K20.01330	382	29
0750 115 327	K20.01328	228	67
0750 115 327	K20.01328	244	70
0750 115 327	K20.01328	300	67
0750 115 327	K20.01328	318	76
0750 115 327	K20.01328	334	60
0750 115 327	K20.01328	345	25
0750 115 327	K20.01328	346	25
0750 115 327	K20.01328	356	60
0750 115 327	K20.01328	374	79
0750 115 327	K20.01328	382	25
0750 115 366	K20.01337	262	99
0750 115 366	K20.01337	278	82
0750 115 369	K20.01338	302	89
0750 115 369	K20.01338	320	99
0750 115 369	K20.01338	336	82
0750 115 369	K20.01338	358	82
0750 115 369	K20.01338	376	95
0750 115 427	K20.01347	40	48
0750 115 430		24	31
0750 115 531	K20.01303	276	42
0750 115 531	K20.01303	287	7
0750 115 531	K20.01303	288	7
0750 115 531	K20.01303	298	42
0750 115 531	K20.01303	334	42
0750 115 531	K20.01303	345	7
0750 115 531	K20.01303	346	7
0750 115 531	K20.01303	356	42
0750 115 531	K20.01303	374	54
0750 115 531	K20.01303	382	7
0750 115 533	K20.01348	42	55
0750 115 534	K20.01303	276	42
0750 115 534	K20.01303	287	7
0750 115 534	K20.01303	288	7
0750 115 534	K20.01303	298	42
0750 115 534	K20.01303	334	42
0750 115 534	K20.01303	345	7
0750 115 534	K20.01303	346	7
0750 115 534	K20.01303	356	42
0750 115 534	K20.01303	374	54
0750 115 534	K20.01303	382	7
0750 115 580		16	25
0750 115 584	K20.01322	210	54
0750 115 584	K20.01322	258	58
0750 115 584	K20.01322	276	50
0750 115 584	K20.01322	287	16
0750 115 584	K20.01322	288	16
0750 115 969	K20.01463	74	35
0750 115 969	K20.01463	82	13
0750 115 969	K20.01463	83	13
0750 115 970	K20.01462	52	27

Original parts names, oem numbers, symbols and descriptions used in this catalogue are for reference purposes only.

OEM NO	KAÇMAZ NO	PAGE	FIG
0750 115 970	K20.01462	65	15
0750 115 970	K20.01462	66	15
0750 115 970	K20.01462	67	15
0750 115 970	K20.01462	74	38
0750 115 970	K20.01462	82	16
0750 115 970	K20.01462	83	16
0750 115 971	K20.01307	52	43
0750 115 971	K20.01307	76	51
0750 115 971	K20.01307	82	23
0750 115 971	K20.01307	83	23
0750 115 971	K20.01307	88	10
0750 115 972	K20.01308	52	46
0750 115 972	K20.01308	65	27
0750 115 972	K20.01308	66	27
0750 115 972	K20.01308	67	27
0750 115 972	K20.01308	76	54
0750 115 972	K20.01308	82	26
0750 115 972	K20.01308	83	26
0750 115 973	K20.01309	26	46
0750 115 973	K20.01309	54	53
0750 115 973	K20.01309	65	32
0750 115 973	K20.01309	66	32
0750 115 973	K20.01309	67	32
0750 115 973	K20.01309	76	61
0750 115 973	K20.01309	82	30
0750 115 973	K20.01309	83	30
0750 115 973	K20.01309	94	72
0750 115 974	K20.01333	28	65
0750 115 974	K20.01333	42	72
0750 115 974	K20.01333	56	66
0750 115 974	K20.01333	76	73
0750 115 974	K20.01333	96	87
0750 115 994	K20.01346	40	46
0750 115 995	K20.01345	40	33
0750 116 002	K20.01134	126	31
0750 116 002	K20.01134	138	29
0750 116 002	K20.01134	154	29
0750 116 002	K20.01134	168	29
0750 116 002	K20.01134	182	31
0750 116 002	K20.01134	200	29
0750 116 002	K20.01134	216	31
0750 116 002	K20.01134	234	31
0750 116 002	K20.01134	248	31
0750 116 002	K20.01134	266	39
0750 116 002	K20.01134	282	40
0750 116 002	K20.01134	306	40
0750 116 002	K20.01134	324	38
0750 116 002	K20.01134	340	41
0750 116 002	K20.01134	362	42
0750 116 002	K20.01134	378	40
0750 116 002	K20.01134	398	33
0750 116 002	K20.01134	410	33
0750 116 048	K20.01129	34	66
0750 116 048	K20.01129	62	70
0750 116 048	K20.01129	102	70
0750 116 165	K20.01133	30	12
0750 116 165	K20.01133	58	13
0750 116 165	K20.01133	98	12
0750 116 165	K20.01133	124	8
0750 116 165	K20.01133	138	8
0750 116 165	K20.01133	154	8
0750 116 165	K20.01133	168	8
0750 116 165	K20.01133	182	8
0750 116 165	K20.01133	198	8
0750 116 165	K20.01133	216	8
0750 116 165	K20.01133	264	23
0750 116 166	K20.01132	124	8
0750 116 166	K20.01132	138	8
0750 116 197	K20.01156	32	41
0750 116 197	K20.01156	60	38
0750 116 197	K20.01156	80	41
0750 116 197	K20.01156	100	37
0750 116 365		390	12
0750 116 365		402	12
0750 116 373	K20.01142	4	52
0750 116 394	K20.01134	126	31
0750 116 394	K20.01134	138	29
0750 116 394	K20.01134	154	29
0750 116 394	K20.01134	200	29
0750 116 394	K20.01134	216	31
0750 116 394	K20.01134	234	31
0750 116 394	K20.01134	248	31
0750 116 394	K20.01134	266	39
0750 116 394	K20.01134	282	40
0750 116 394	K20.01134	306	40
0750 116 394	K20.01134	324	38
0750 116 394	K20.01134	340	41
0750 116 394	K20.01134	362	42
0750 116 394	K20.01134	378	40
0750 116 394	K20.01134	380	40
0750 116 394	K20.01134	398	33
0750 116 394	K20.01134	410	33
0750 116 404	K20.01156	32	41
0750 116 404	K20.01156	60	38
0750 116 404	K20.01156	80	41
0750 116 404	K20.01156	100	37
0750 116 482		78	13
0750 116 958	K20.01149	44	13
0750 117 008	K20.01125	122	78
0750 117 008	K20.01125	136	78
0750 117 009	K20.01126	152	80
0750 117 009	K20.01126	166	79
0750 117 009	K20.01126	180	80
0750 117 009	K20.01126	196	79
0750 117 009	K20.01126	228	78
0750 117 009	K20.01126	246	80
0750 117 009	K20.01126	262	93
0750 117 009	K20.01126	278	77
0750 117 009	K20.01126	302	84
0750 117 009	K20.01126	320	93
0750 117 009	K20.01126	320	98
0750 117 009	K20.01126	336	77
0750 117 009	K20.01126	358	77
0750 117 009	K20.01126	376	90
0750 117 009	K20.01126	293	3
0750 117 009	K20.01126	350	3
0750 117 009	K20.01126	386	3
0750 117 010	K20.01124	122	73
0750 117 010	K20.01124	136	73
0750 117 010	K20.01124	152	75
0750 117 010	K20.01124	164	74
0750 117 010	K20.01124	180	75
0750 117 010	K20.01124	194	74
0750 117 010	K20.01124	212	80
0750 117 010	K20.01124	262	93
0750 117 010	K20.01124	320	93
0750 117 011	K20.01127	212	85
0750 117 011	K20.01127	262	98
0750 117 030	K20.01124	12	72
0750 117 030	K20.01124	122	73
0750 117 030	K20.01124	136	73
0750 117 030	K20.01124	152	75
0750 117 030	K20.01124	164	74
0750 117 030	K20.01124	180	75
0750 117 030	K20.01124	194	74
0750 117 030	K20.01124	212	80
0750 117 030	K20.01124	262	93
0750 117 079	K20.01101	50	6
0750 117 079	K20.01101	68	2
0750 117 079	K20.01101	69	2
0750 117 079	K20.01101	88	9
0750 117 079	K20.01101	107	3
0750 117 079	K20.01101	108	3
0750 117 079	K20.01101	109	3
0750 117 079	K20.01101	110	3
0750 117 079	K20.01101	111	3
0750 117 079	K20.01101	112	3

OEM NO	KAÇMAZ NO	PAGE	FIG
0750 117 083	K20.01123	16	53
0750 117 083	K20.01123	28	60
0750 117 083	K20.01123	56	64
0750 117 083	K20.01123	69	8
0750 117 083	K20.01123	70	8
0750 117 083	K20.01123	76	71
0750 117 083	K20.01123	86	8
0750 117 083	K20.01123	96	85
0750 117 083	K20.01123	113	8
0750 117 083	K20.01123	114	8
0750 117 198	K20.01144	42	69
0750 117 199	K20.01143	6	56
0750 117 232	K20.01109	14	13
0750 117 232	K20.01109	24	17
0750 117 232	K20.01109	72	21
0750 117 232	K20.01109	82	3
0750 117 232	K20.01109	83	3
0750 117 232	K20.01109	210	44
0750 117 232	K20.01109	226	43
0750 117 232	K20.01109	242	44
0750 117 232	K20.01109	258	51
0750 117 232	K20.01109	274	38
0750 117 232	K20.01109	287	3
0750 117 232	K20.01109	288	3
0750 117 232	K20.01109	298	38
0750 117 232	K20.01109	316	51
0750 117 232	K20.01109	332	38
0750 117 232	K20.01109	345	3
0750 117 232	K20.01109	346	3
0750 117 232	K20.01109	354	38
0750 117 232	K20.01109	372	50
0750 117 232	K20.01109	382	3
0750 117 233	K20.01120	228	74
0750 117 312	K20.01136	38	6
0750 117 312	K20.01136	224	37
0750 117 312	K20.01136	242	38
0750 117 431	K20.01103	118	41
0750 117 431	K20.01103	148	41
0750 117 431	K20.01103	176	41
0750 117 431	K20.01103	206	11
0750 117 431	K20.01103	222	11
0750 117 431	K20.01103	240	12
0750 117 431	K20.01103	256	30
0750 117 431	K20.01103	314	30
0750 117 507	K20.01105	50	11
0750 117 507	K20.01105	65	2
0750 117 507	K20.01105	66	2
0750 117 507	K20.01105	67	2
0750 117 518	K20.01151	14	9
0750 117 518	K20.01151	22	12
0750 117 518	K20.01151	72	16
0750 117 518	K20.01151	84	2
0750 117 518	K20.01151	85	2
0750 117 640		394	50
0750 117 640		406	51
0750 117 651	K20.01131	118	38
0750 117 651	K20.01131	148	38
0750 117 651	K20.01131	176	38
0750 117 651	K20.01131	208	38
0750 117 677	K20.01119	212	77
0750 117 677	K20.01119	260	83
0750 117 677	K20.01119	276	67
0750 117 677	K20.01119	287	31
0750 117 677	K20.01119	288	31
0750 117 678	K20.01121	228	74
0750 117 678	K20.01121	244	77
0750 117 678	K20.01121	300	74
0750 117 678	K20.01121	318	83
0750 117 678	K20.01121	334	67
0750 117 678	K20.01121	345	31
0750 117 678	K20.01121	346	31
0750 117 678	K20.01121	356	67
0750 117 678	K20.01121	376	86
0750 117 678	K20.01121	382	31
0750 117 732	K20.01104	256	31
0750 117 732	K20.01104	272	23
0750 117 732	K20.01104	289	3
0750 117 732	K20.01104	290	3
0750 117 732	K20.01104	291	3
0750 117 732	K20.01104	292	3
0750 117 732	K20.01104	296	23
0750 117 732	K20.01104	314	31
0750 117 732	K20.01104	330	23
0750 117 732	K20.01104	347	3
0750 117 732	K20.01104	348	3
0750 117 732	K20.01104	349	3
0750 117 732	K20.01104	352	23
0750 117 732	K20.01104	370	16
0750 117 732	K20.01104	383	5
0750 117 732	K20.01104	384	5
0750 117 732	K20.01104	385	5
0750 117 799	K20.01157	72	16
0750 117 799	K20.01157	85	2
0750 117 844	K20.01155	76	63
0750 117 844	K20.01155	82	32
0750 117 844	K20.01155	83	32
0750 117 881	K20.01154	76	65
0750 117 881	K20.01154	86	2
0750 118 005	K20.01110	120	46
0750 118 005	K20.01110	134	39
0750 118 006	K20.01116	152	70
0750 118 006	K20.01116	164	69
0750 118 006	K20.01116	178	70
0750 118 006	K20.01116	194	69
0750 118 010	K20.01107	120	44
0750 118 010	K20.01107	134	37
0750 118 038	K20.01108	150	44
0750 118 038	K20.01108	162	37
0750 118 038	K20.01108	178	44
0750 118 038	K20.01108	192	37
0750 118 082	K20.01161	8	8
0750 118 130	K20.01102	116	14
0750 118 130	K20.01102	132	14
0750 118 130	K20.01102	146	14
0750 118 130	K20.01102	160	14
0750 118 130	K20.01102	174	14
0750 118 130	K20.01102	190	14
0750 118 131	K20.01102	116	14
0750 118 131	K20.01102	132	14
0750 118 131	K20.01102	146	14
0750 118 131	K20.01102	160	14
0750 118 131	K20.01102	174	14
0750 118 131	K20.01102	190	14
0750 118 135	K20.01116	152	70
0750 118 135	K20.01116	164	69
0750 118 135	K20.01116	178	70
0750 118 137	K20.01115	122	70
0750 118 137	K20.01115	136	70
0750 118 153	K20.01114	122	68
0750 118 153	K20.01114	136	68
0750 118 180	K20.01117	152	72
0750 118 180	K20.01117	164	71
0750 118 180	K20.01117	178	72
0750 118 180	K20.01117	194	71
0750 118 191	K20.01112	226	45
0750 118 191	K20.01112	316	53
0750 118 198	K20.01302	210	46
0750 118 198	K20.01302	258	53
0750 118 220	K20.01111	150	46
0750 118 220	K20.01111	162	39
0750 118 220	K20.01111	178	46
0750 118 220	K20.01111	192	39
0750 118 258	K20.01112	226	45
0750 118 258	K20.01112	242	46
0750 118 258	K20.01112	316	53
0750 118 284	K20.01163	396	7
0750 118 284	K20.01163	408	7

Original parts names, oem numbers, symbols and descriptions used in this catalogue are for reference purposes only.

OEM NO	KAÇMAZ NO	PAGE	FIG
0750 118 511	K20.01122	54	58
0750 118 511	K20.01122	69	2
0750 118 511	K20.01122	70	2
0750 118 511	K20.01122	94	80
0750 118 511	K20.01122	113	3
0750 118 511	K20.01122	114	3
0750 119 109	K20.01453	124	6
0750 119 109	K20.01453	129	5
0750 119 109	K20.01453	138	6
0750 119 109	K20.01453	144	5
0750 119 109	K20.01453	154	6
0750 119 109	K20.01453	156	5
0750 119 109	K20.01453	157	5
0750 119 109	K20.01453	168	6
0750 119 109	K20.01453	170	5
0750 119 109	K20.01453	171	5
0750 119 109	K20.01453	182	6
0750 119 109	K20.01453	186	5
0750 119 109	K20.01453	187	5
0750 119 109	K20.01453	198	6
0750 119 109	K20.01453	202	5
0750 119 109	K20.01453	203	5
0750 119 109	K20.01453	236	5
0750 119 116	K20.01454	198	6
0750 119 116	K20.01454	232	6
0750 119 116	K20.01454	248	8
0750 119 116	K20.01454	280	8
0750 119 116	K20.01454	304	8
0750 119 116	K20.01454	322	8
0750 119 116	K20.01454	338	9
0750 119 116	K20.01454	360	14
0750 119 116	K20.01454	378	9
0750 119 116	K20.01454	396	25
0750 119 116	K20.01454	408	25
0750 119 124	K20.00388	298	41
0750 119 124	K20.00388	332	41
0750 119 124	K20.00388	345	6
0750 119 124	K20.00388	346	6
0750 119 124	K20.00388	354	41
0750 119 124	K20.00388	374	53
0750 119 124	K20.00388	382	6
0750 119 125	K20.00174	274	41
0750 119 125	K20.00174	287	6
0750 119 125	K20.00174	288	6
0750 119 131	K20.02079	16	49
0750 119 143	K20.01453	124	6
0750 119 143	K20.01453	138	6
0750 119 143	K20.01453	154	6
0750 119 143	K20.01453	182	6
0750 119 143	K20.01453	198	6
0750 120 067	K20.01123	16	53
0750 120 067	K20.01123	28	60
0750 120 067	K20.01123	56	64
0750 120 067	K20.01123	69	8
0750 120 067	K20.01123	70	8
0750 120 067	K20.01123	76	71
0750 120 067	K20.01123	96	85
0750 120 067	K20.01123	113	8
0750 120 067	K20.01123	114	8
0750 120 097	K20.01147	42	63
0750 120 290	K20.01151	72	16
0750 120 290	K20.01151	84	2
0750 120 290	K20.01151	85	2
0750 120 291	K20.01123	16	53
0750 120 291	K20.01123	28	60
0750 120 291	K20.01123	56	64
0750 120 291	K20.01123	76	71
0750 120 291	K20.01123	86	8
0750 120 291	K20.01123	96	85
0750 132 032		134	31
0750 132 032		162	31
0750 132 032		208	28
0750 132 032		242	29
0750 132 033		118	31
0750 132 033		148	31
0750 132 033		176	31
0750 132 033		192	31
0750 132 033		224	28
0750 145 002		44	35
0750 145 003	K20.01621	34	60
0750 145 003	K20.01621	62	66
0750 145 003	K20.01621	102	66
0750 501 237		90	41
0769 171 964		390	5
0769 171 964		402	5
0769 174 091	K20.00038	30	16
0769 174 091	K20.00038	58	17
0769 174 091	K20.00038	78	17
0769 174 091	K20.00038	98	16
0769 174 091	K20.00038	264	26
0769 174 091	K20.00038	280	15
0769 174 091	K20.00038	304	15
0769 174 091	K20.00038	322	25
0769 174 091	K20.00038	338	16
0769 174 091	K20.00038	360	22
0769 174 091	K20.00038	378	16
0769 186 281	K20.00103	16	33
0769 186 281	K20.00103	276	47
0769 186 281	K20.00103	288	14
0769 186 281	K20.00103	300	47
0769 186 281	K20.00103	334	47
0769 186 281	K20.00103	345	14
0769 186 281	K20.00103	356	47
0769 186 286	K20.00039	124	17
0769 186 286	K20.00039	138	17
0769 186 286	K20.00039	154	17
0769 186 286	K20.00039	182	17
0769 186 286	K20.00039	198	17
0769 186 286	K20.00039	216	17
0769 186 286	K20.00039	232	17
0769 186 286	K20.00039	248	19
0769 186 286	K20.00039	264	32
0769 186 286	K20.00039	280	22
0769 186 286	K20.00039	304	22
0769 186 286	K20.00039	322	31
0769 186 286	K20.00039	338	22
0769 186 286	K20.00039	360	27
0770 067 039	K20.01698	360	6
1204 308 123		22	11
1205 308 016		8	4
1205 308 020		8	4
1232 304 062		130	11
1232 304 062		158	11
1232 304 062		172	11
1232 304 062		188	11
1232 304 062		204	11
1232 304 062		220	11
1232 304 062		238	11
1232 304 062		251	11
1232 304 062		268	11
1232 304 062		285	11
1232 304 062		309	11
1232 304 062		326	11
1232 304 062		343	11
1232 304 062		366	11
1232 304 063		130	11
1232 304 063		158	11
1232 304 063		172	11
1232 304 063		188	11
1232 304 063		204	11
1232 304 063		220	11
1232 304 063		238	11
1232 304 063		251	11
1232 304 063		268	11
1232 304 063		285	11
1232 304 063		309	11
1232 304 063		326	11

Original parts names, oem numbers, symbols and descriptions used in this catalogue are for reference purposes only.

OEM NO	KAÇMAZ NO	PAGE	FIG
1232 304 063		343	11
1232 304 063		366	11
1232 304 072		130	11
1232 304 072		158	11
1232 304 072		172	11
1232 304 072		188	11
1232 304 072		204	11
1232 304 072		220	11
1232 304 072		238	11
1232 304 072		251	11
1232 304 072		268	11
1232 304 072		285	11
1232 304 072		309	11
1232 304 072		326	11
1232 304 072		343	11
1232 304 072		366	11
1238 304 394	K20.00468	50	18
1238 304 394	K20.00468	63	4
1238 304 394	K20.00468	63	5
1238 304 394	K20.00468	63	6
1238 304 394	K20.00468	65	7
1238 304 394	K20.00468	66	7
1238 304 394	K20.00468	67	7
1238 304 394	K20.00468	92	43
1238 304 394	K20.00468	103	4
1238 304 394	K20.00468	103	5
1238 304 394	K20.00468	103	6
1238 304 394	K20.00468	105	12
1238 304 394	K20.00468	106	12
1238 308 166	K20.02108	32	38
1238 308 166	K20.02108	36	11
1238 308 166	K20.02108	44	39
1238 308 166	K20.02108	64	11
1238 308 166	K20.02108	80	48
1238 308 166	K20.02108	104	11
1238 308 166	K20.02108	398	31
1238 308 166	K20.02108	408	31
1238 308 201	K20.02108	32	38
1238 308 201	K20.02108	36	11
1238 308 201	K20.02108	44	39
1238 308 201	K20.02108	48	5
1238 308 201	K20.02108	64	11
1238 308 201	K20.02108	80	48
1238 308 201	K20.02108	104	11
1238 308 201	K20.02108	130	8
1238 308 201	K20.02108	144	8
1238 308 201	K20.02108	157	8
1238 308 201	K20.02108	171	8
1238 308 201	K20.02108	187	8
1238 308 201	K20.02108	204	8
1238 308 201	K20.02108	220	8
1238 308 201	K20.02108	237	8
1238 308 201	K20.02108	251	8
1238 308 201	K20.02108	269	10
1238 308 201	K20.02108	286	10
1238 308 201	K20.02108	310	10
1238 308 201	K20.02108	327	10
1238 308 201	K20.02108	344	10
1238 308 201	K20.02108	367	10
1238 308 201	K20.02108	381	2
1238 308 201	K20.02108	398	31
1238 308 201	K20.02108	408	31
1240 304 117	K20.01729	46	50
1240 304 205	K20.00244	88	21
1240 304 205	K20.00244	103	6
1240 304 205	K20.00244	107	15
1240 304 205	K20.00244	108	15
1240 304 205	K20.00244	109	15
1240 304 205	K20.00244	110	15
1240 304 205	K20.00244	111	15
1240 304 205	K20.00244	112	15
1240 304 272	K20.00244	88	21
1240 304 272	K20.00244	103	6
1240 304 272	K20.00244	107	15
1240 304 272	K20.00244	108	15
1240 304 272	K20.00244	109	15
1240 304 272	K20.00244	110	15
1240 304 272	K20.00244	111	15
1240 304 272	K20.00244	112	15
1240 304 278	K20.00471	30	18
1240 304 278	K20.00471	58	19
1240 304 278	K20.00471	78	19
1240 304 278	K20.00471	88	18
1240 304 278	K20.00471	98	18
1240 304 278	K20.00471	103	5
1240 304 278	K20.00471	107	9
1240 304 278	K20.00471	108	9
1240 304 278	K20.00471	109	9
1240 304 278	K20.00471	110	9
1240 304 278	K20.00471	111	9
1240 304 278	K20.00471	112	9
1240 304 278	K20.00471	118	35
1240 304 278	K20.00471	124	16
1240 304 278	K20.00471	127	5
1240 304 278	K20.00471	127	4
1240 304 278	K20.00471	127	6
1240 304 278	K20.00471	128	4
1240 304 278	K20.00471	128	5
1240 304 278	K20.00471	128	6
1240 304 278	K20.00471	129	5
1240 304 278	K20.00471	129	6
1240 304 278	K20.00471	134	35
1240 304 278	K20.00471	138	16
1240 304 278	K20.00471	141	5
1240 304 278	K20.00471	142	5
1240 304 278	K20.00471	143	5
1240 304 278	K20.00471	143	6
1240 304 278	K20.00471	148	35
1240 304 278	K20.00471	154	16
1240 304 278	K20.00471	155	5
1240 304 278	K20.00471	155	4
1240 304 278	K20.00471	155	6
1240 304 278	K20.00471	156	4
1240 304 278	K20.00471	156	5
1240 304 278	K20.00471	156	6
1240 304 278	K20.00471	157	5
1240 304 278	K20.00471	157	6
1240 304 278	K20.00471	162	35
1240 304 278	K20.00471	168	16
1240 304 278	K20.00471	169	5
1240 304 278	K20.00471	171	5
1240 304 278	K20.00471	171	6
1240 304 278	K20.00471	176	35
1240 304 278	K20.00471	182	16
1240 304 278	K20.00471	185	5
1240 304 278	K20.00471	185	4
1240 304 278	K20.00471	185	6
1240 304 278	K20.00471	186	4
1240 304 278	K20.00471	186	5
1240 304 278	K20.00471	186	6
1240 304 278	K20.00471	187	5
1240 304 278	K20.00471	187	6
1240 304 278	K20.00471	192	35
1240 304 278	K20.00471	198	16
1240 304 278	K20.00471	201	5
1240 304 278	K20.00471	203	5
1240 304 278	K20.00471	203	6
1240 304 278	K20.00471	216	16
1240 304 278	K20.00471	219	5
1240 304 278	K20.00471	220	5
1240 304 278	K20.00471	232	16
1240 304 278	K20.00471	237	5
1240 304 278	K20.00471	248	18
1240 304 278	K20.00471	250	5
1240 304 278	K20.00471	264	28
1240 304 278	K20.00471	268	5
1240 304 278	K20.00471	280	19

Original parts names, oem numbers, symbols and descriptions used in this catalogue are for reference purposes only.

OEM NO	KAÇMAZ NO	PAGE	FIG
1240 304 278	K20.00471	284	5
1240 304 278	K20.00471	284	6
1240 304 278	K20.00471	285	5
1240 304 278	K20.00471	285	6
1240 304 278	K20.00471	304	19
1240 304 278	K20.00471	308	5
1240 304 278	K20.00471	309	6
1240 304 278	K20.00471	309	5
1240 304 278	K20.00471	322	27
1240 304 278	K20.00471	326	5
1240 304 278	K20.00471	338	20
1240 304 278	K20.00471	342	5
1240 304 278	K20.00471	342	6
1240 304 278	K20.00471	343	5
1240 304 278	K20.00471	343	6
1240 304 278	K20.00471	360	26
1240 304 278	K20.00471	365	5
1240 304 278	K20.00471	366	5
1240 304 278	K20.00471	366	6
1240 304 278	K20.00471	378	20
1240 304 278	K20.00471	381	5
1240 306 214		10	59
1240 306 229		10	35
1246 203 007	K20.01123	16	53
1246 203 007	K20.01123	28	60
1246 203 007	K20.01123	56	64
1246 203 007	K20.01123	76	71
1246 203 007	K20.01123	96	85
1246 203 008	K20.01146	18	60
1246 203 008	K20.01146	42	58
1246 206 008		10	58
1246 206 011		10	34
1246 304 278	K20.00346	120	55
1246 304 278	K20.00346	128	2
1246 304 278	K20.00346	128	1
1246 304 278	K20.00346	150	56
1246 304 278	K20.00346	156	2
1246 304 278	K20.00346	156	1
1246 304 278	K20.00346	178	56
1246 304 278	K20.00346	186	2
1246 304 278	K20.00346	186	1
1249 304 222	K20.00467	50	17
1249 304 222	K20.00467	63	3
1249 304 222	K20.00467	63	4
1249 304 222	K20.00467	63	5
1249 304 222	K20.00467	65	8
1249 304 222	K20.00467	66	8
1249 304 222	K20.00467	67	8
1249 304 222	K20.00467	92	44
1249 304 222	K20.00467	103	3
1249 304 222	K20.00467	103	4
1249 304 222	K20.00467	103	5
1249 304 222	K20.00467	105	13
1249 304 222	K20.00467	106	13
1250 302 478		8	3
1250 304 006	K20.02017	10	54
1250 304 160	K20.00034	120	57
1250 304 160	K20.00034	128	5
1250 304 160	K20.00034	128	6
1250 304 160	K20.00034	128	7
1250 304 160	K20.00034	150	58
1250 304 160	K20.00034	156	5
1250 304 160	K20.00034	156	6
1250 304 160	K20.00034	156	7
1250 304 160	K20.00034	178	58
1250 304 160	K20.00034	186	5
1250 304 160	K20.00034	186	6
1250 304 160	K20.00034	186	7
1250 304 198		10	67
1250 305 003	K20.02077	12	81
1250 305 006		12	79
1250 306 262		8	20
1250 307 552		381	3
1250 313 190		130	12
1250 313 190		158	12
1250 313 190		172	12
1250 313 190		188	12
1250 313 190		204	12
1250 313 190		220	12
1250 313 190		238	12
1250 313 190		251	12
1250 313 190		268	12
1250 313 190		285	12
1250 313 190		309	12
1250 313 190		326	12
1250 313 190		343	12
1250 313 190		366	12
1252 306 077		8	23
1257 304 020	K20.00034	120	57
1257 304 020	K20.00034	128	5
1257 304 020	K20.00034	128	6
1257 304 020	K20.00034	128	7
1257 304 020	K20.00034	150	58
1257 304 020	K20.00034	156	5
1257 304 020	K20.00034	156	6
1257 304 020	K20.00034	156	7
1257 304 020	K20.00034	178	58
1257 304 020	K20.00034	186	5
1257 304 020	K20.00034	186	6
1257 304 020	K20.00034	186	7
1259 303 004		18	71
1268 302 175	K20.01899	8	9
1268 303 066		12	68
1268 303 132		12	69
1268 303 138	K20.01801	12	76
1268 303 140	K20.01808	12	73
1268 304 008	K20.01909	10	57
1268 304 136		12	67
1268 304 175	K20.01906	10	41
1268 304 424	K20.00144	10	43
1268 304 424	K20.00144	210	62
1268 304 424	K20.00144	219	2
1268 304 424	K20.00144	226	59
1268 304 424	K20.00144	236	2
1268 304 424	K20.00144	244	62
1268 304 424	K20.00144	250	2
1268 304 424	K20.00144	258	63
1268 304 424	K20.00144	268	2
1268 304 424	K20.00144	300	59
1268 304 424	K20.00144	308	2
1268 304 424	K20.00144	316	63
1268 304 424	K20.00144	326	2
1268 304 424	K20.00144	365	2
1268 304 424	K20.00144	374	71
1268 304 445	K20.00781	8	15
1268 304 445	K20.00781	14	15
1268 304 445	K20.00781	19	1
1268 304 445	K20.00781	19	2
1268 304 445	K20.00781	24	36
1268 304 445	K20.00781	44	17
1268 304 445	K20.00781	74	41
1268 304 445	K20.00781	35	2
1268 304 445	K20.00781	35	1
1268 304 491	K20.00302	10	44
1268 304 491	K20.00302	300	60
1268 304 491	K20.00302	365	3
1268 304 491	K20.00302	212	63
1268 304 491	K20.00302	219	3
1268 304 491	K20.00302	226	60
1268 304 491	K20.00302	236	3
1268 304 491	K20.00302	244	63
1268 304 491	K20.00302	250	3
1268 304 491	K20.00302	258	64
1268 304 491	K20.00302	268	3
1268 304 491	K20.00302	308	3
1268 304 491	K20.00302	316	64
1268 304 491	K20.00302	326	3

OEM NO	KAÇMAZ NO	PAGE	FIG
1268 304 491	K20.00302	374	72
1268 304 494	K20.00302	10	44
1268 304 494	K20.00302	212	63
1268 304 494	K20.00302	219	3
1268 304 494	K20.00302	226	60
1268 304 494	K20.00302	236	3
1268 304 494	K20.00302	244	63
1268 304 494	K20.00302	250	3
1268 304 494	K20.00302	258	64
1268 304 494	K20.00302	268	3
1268 304 494	K20.00302	300	60
1268 304 494	K20.00302	308	3
1268 304 494	K20.00302	316	64
1268 304 494	K20.00302	326	3
1268 304 494	K20.00302	365	3
1268 304 494	K20.00302	374	72
1268 304 525	K20.00145	10	45
1268 304 525	K20.00145	212	64
1268 304 525	K20.00145	219	4
1268 304 525	K20.00145	226	61
1268 304 525	K20.00145	236	4
1268 304 525	K20.00145	244	64
1268 304 525	K20.00145	250	4
1268 304 525	K20.00145	260	65
1268 304 525	K20.00145	268	4
1268 304 525	K20.00145	300	61
1268 304 525	K20.00145	308	4
1268 304 525	K20.00145	316	65
1268 304 525	K20.00145	326	4
1268 304 525	K20.00145	365	4
1268 304 525	K20.00145	374	73
1268 304 553	K20.01802	10	38
1268 304 554	K20.01901	8	16
1268 304 555	K20.01904	8	32
1268 304 557	K20.01908	10	46
1268 304 559	K20.01902	8	25
1268 304 562		8	27
1268 304 566	K20.01905	10	40
1268 304 568	K20.01907	10	53
1268 304 594	K20.00781	8	15
1268 304 594	K20.00781	14	15
1268 304 594	K20.00781	19	1
1268 304 594	K20.00781	19	2
1268 304 594	K20.00781	24	36
1268 304 594	K20.00781	35	2
1268 304 594	K20.00781	35	1
1268 304 594	K20.00781	44	17
1268 304 594	K20.00781	74	41
1268 304 594	K20.00781	81	2
1268 304 594	K20.00781	81	1
1268 304 594	K20.00781	82	19
1268 304 594	K20.00781	83	19
1268 305 009	K20.01912	12	80
1268 306 035		10	58
1268 306 096		10	49
1268 306 101		8	21
1268 307 091		36	8
1268 307 091		64	8
1268 307 091		104	8
1268 307 170		36	8
1268 307 170		64	8
1268 307 170		104	8
1268 308 020		10	62
1268 312 057	K20.01058	88	22
1269 332 036	K20.00361	130	2
1269 332 036	K20.00361	144	2
1269 332 036	K20.00361	124	3
1269 332 036	K20.00361	138	3
1269 338 020	K20.02062	10	67
1272 298 934	K20.00810	30	21
1272 334 003	K20.00328	30	24
1272 334 003	K20.00328	58	27
1272 334 003	K20.00328	78	26
1272 334 003	K20.00328	98	26
1290 201 167		2	4
1290 201 180		4	53
1290 201 191		4	53
1290 201 207		4	53
1290 201 211		4	53
1290 201 227		2	4
1290 201 245		2	4
1290 201 253		4	53
1290 201 256		4	53
1290 203 039	K20.00722	6	61
1290 203 042	K20.00723	6	61
1290 206 128	K20.00694	4	27
1290 206 130	K20.00685	2	17
1290 206 132	K20.00686	2	17
1290 206 164	K20.00712	4	49
1290 301 073		36	3
1290 301 073		64	3
1290 301 073		104	3
1290 301 140		36	3
1290 301 140		48	4
1290 301 140		64	3
1290 301 140		104	3
1290 301 176		2	5
1290 302 389		2	2
1290 302 401	K20.00673	2	1
1290 302 408		2	2
1290 302 430		2	1
1290 302 431		2	2
1290 302 437	K20.00674	2	2
1290 302 447		2	2
1290 302 465		2	7
1290 302 472		2	7
1290 302 478		2	7
1290 302 480		2	7
1290 302 482		2	7
1290 302 493		2	7
1290 302 507		2	7
1290 302 511	K20.00675	2	7
1290 302 512	K20.00676	2	7
1290 302 524		2	7
1290 303 192	K20.00722	6	61
1290 303 197	K20.00720	6	60
1290 303 198	K20.00719	6	59
1290 303 199	K20.00717	6	58
1290 303 200	K20.00715	6	57
1290 303 202	K20.00721	6	60
1290 303 203	K20.00716	6	57
1290 303 204	K20.00718	6	58
1290 303 224	K20.00718	6	58
1290 304 056	K20.00714	4	51
1290 304 058	K20.00711	4	48
1290 304 350	K20.00702	4	35
1290 304 356	K20.00704	4	37
1290 304 366	K20.00703	4	36
1290 304 371	K20.00711	4	48
1290 304 438	K20.00704	4	37
1290 304 440	K20.00706	4	42
1290 304 475	K20.00792	6	55
1290 304 482	K20.00677	2	10
1290 304 485	K20.00700	4	33
1290 304 487	K20.00699	4	33
1290 304 505	K20.00677	2	10
1290 304 508	K20.00690	4	23
1290 304 509	K20.00695	4	28
1290 304 547	K20.00687	2	18
1290 304 548	K20.00688	2	18
1290 304 571	K20.00697	4	31
1290 304 572	K20.00709	4	46
1290 304 573	K20.00710	4	47
1290 304 574	K20.00689	4	22
1290 304 580	K20.00791	4	55
1290 304 581	K20.00696	4	29
1290 304 586	K20.00680	2	12

Original parts names, oem numbers, symbols and descriptions used in this catalogue are for reference purposes only.

OEM NO	KAÇMAZ NO	PAGE	FIG
1290 304 587	K20.00698	4	31
1290 304 598	K20.00792	6	55
1290 304 599	K20.00790	4	55
1290 304 620	K20.00698	4	31
1290 305 022	K20.00725	6	65
1290 305 023	K20.00724	6	64
1290 305 026	K20.00724	6	64
1290 305 028	K20.00725	6	65
1290 305 029	K20.00724	6	64
1290 305 031	K20.00724	6	64
1290 305 034	K20.00724	6	64
1290 306 066	K20.00169	14	21
1290 306 066	K20.00169	24	27
1290 306 066	K20.00169	24	39
1290 306 066	K20.00169	50	20
1290 306 066	K20.00169	74	31
1290 306 066	K20.00169	92	47
1290 306 078	K20.00713	4	50
1290 306 295	K20.00713	4	50
1290 306 423	K20.00684	2	16
1290 306 429	K20.00708	4	44
1290 306 439	K20.00707	4	43
1290 306 494	K20.00708	4	44
1295 202 004	K20.00001	118	32
1295 202 005	K20.00501	134	32
1295 202 007	K20.00002	118	32
1295 202 008	K20.00562	118	32
1295 202 028	K20.00565	118	32
1295 202 036	K20.00342	118	42
1295 202 039	K20.00003	118	32
1295 202 041	K20.00484	116	3
1295 202 041	K20.00484	132	3
1295 202 041	K20.00484	146	3
1295 202 041	K20.00484	160	3
1295 202 041	K20.00484	174	3
1295 202 041	K20.00484	190	3
1295 202 041	K20.00484	206	3
1295 202 041	K20.00484	222	3
1295 202 041	K20.00484	240	4
1295 202 045	K20.00033	118	32
1295 206 064		134	48
1295 206 065		120	49
1295 206 071		120	58
1295 206 077		136	58
1295 206 097		120	49
1295 206 171		120	58
1295 206 172		120	49
1295 206 192		120	58
1295 206 195		120	58
1295 206 212		134	48
1295 206 213		120	49
1295 206 214		120	58
1295 206 215		136	58
1295 206 219		120	49
1295 206 220		120	58
1295 206 221		120	49
1295 206 222		120	58
1295 206 223		120	58
1295 206 243		136	65
1295 206 251		122	65
1295 206 254		136	65
1295 206 255		122	65
1295 206 257		122	65
1295 212 009		242	29
1295 231 001		126	33
1295 231 001		140	31
1295 231 001		154	31
1295 231 001		168	31
1295 231 001		182	33
1295 231 001		200	31
1295 232 027	K20.00360	124	2
1295 232 027	K20.00360	130	1
1295 232 027	K20.00360	138	2
1295 232 027	K20.00360	144	1
1295 232 028	K20.00602	124	1
1295 232 028	K20.00602	138	1
1295 232 044	K20.00602	124	1
1295 232 044	K20.00602	138	1
1295 232 048	K20.00602	124	1
1295 232 048	K20.00602	138	1
1295 233 025	K20.00005	124	27
1295 233 025	K20.00005	128	6
1295 233 025	K20.00005	129	7
1295 233 025	K20.00005	129	8
1295 233 025	K20.00005	138	27
1295 233 025	K20.00005	142	6
1295 233 025	K20.00005	143	7
1295 233 025	K20.00005	143	8
1295 298 915	K20.01584	130	1
1295 298 915	K20.01584	144	1
1295 298 915	K20.01584	157	1
1295 298 915	K20.01584	171	1
1295 298 915	K20.01584	187	1
1295 298 915	K20.01584	204	1
1295 298 915	K20.01584	220	1
1295 298 915	K20.01584	237	1
1295 298 915	K20.01584	251	1
1295 298 933	K20.00474	78	22
1295 298 933	K20.00474	280	20
1295 298 933	K20.00474	304	20
1295 298 933	K20.00474	338	21
1295 298 933	K20.00474	378	21
1295 298 936	K20.00486	127	
1295 298 936	K20.00486	141	
1295 298 936	K20.00486	155	
1295 298 936	K20.00486	169	
1295 298 936	K20.00486	185	
1295 298 936	K20.00486	201	
1295 298 937	K20.00497	129	
1295 298 937	K20.00497	143	
1295 298 938	K20.00496	128	
1295 298 938	K20.00496	142	
1295 298 939	K20.00498	129	
1295 298 939	K20.00498	143	
1295 298 939	K20.00498	157	
1295 298 939	K20.00498	171	
1295 298 939	K20.00498	187	
1295 298 939	K20.00498	203	
1295 298 939	K20.00498	219	
1295 298 950	K20.00500	129	
1295 298 950	K20.00500	143	
1295 298 950	K20.00500	157	
1295 298 950	K20.00500	171	
1295 298 950	K20.00500	187	
1295 298 950	K20.00500	203	
1295 298 956	K20.01745	14	19
1295 298 956	K20.01745	24	25
1295 298 956	K20.01745	74	29
1295 298 956	K20.01745	256	41
1295 298 956	K20.01745	274	30
1295 298 956	K20.01745	298	30
1295 298 956	K20.01745	314	41
1295 298 956	K20.01745	332	30
1295 298 956	K20.01745	354	30
1295 298 956	K20.01745	372	24
1295 298 959	K20.00499	129	
1295 298 959	K20.00499	143	
1295 298 962	K20.00519	203	
1295 298 962	K20.00519	237	
1295 298 962	K20.00519	250	
1295 301 131		116	6a
1295 301 131		146	6a
1295 301 131		174	6a
1295 301 134		116	6a
1295 301 134		146	6a
1295 301 134		174	6a
1295 301 169		206	6a

Original parts names, oem numbers, symbols and descriptions used in this catalogue are for reference purposes only.

OEM NO	KAÇMAZ NO	PAGE	FIG
1295 301 286		206	6a
1295 301 289		116	6a
1295 301 289		146	6a
1295 301 289		174	6a
1295 301 291		206	6a
1295 301 293		116	6a
1295 301 293		146	6a
1295 301 293		174	6a
1295 301 294		206	6a
1295 301 309		122	71
1295 301 311		122	71
1295 301 311		136	71
1295 301 312		122	71
1295 301 315		122	71
1295 302 070	K20.00009	118	16
1295 302 070	K20.00009	132	16
1295 302 071	K20.00008	132	16
1295 302 071	K20.00008	116	16
1295 302 086	K20.00001	118	32
1295 302 087	K20.00501	134	32
1295 302 089	K20.00002	118	32
1295 302 092	K20.00562	118	32
1295 302 122	K20.00010	118	16
1295 302 122	K20.00010	132	16
1295 302 158	K20.00565	118	32
1295 302 168	K20.00010	132	16
1295 302 168	K20.00010	118	16
1295 302 173	K20.00008	132	16
1295 302 173	K20.00008	116	16
1295 302 174	K20.00009	132	16
1295 302 174	K20.00009	118	16
1295 303 025	K20.00017	122	76
1295 303 025	K20.00017	136	76
1295 303 026	K20.00018	122	76
1295 303 026	K20.00018	136	76
1295 303 027	K20.00035	122	75
1295 303 027	K20.00035	136	75
1295 303 028	K20.00014	122	75
1295 303 028		K20.00014	
136	75		
1295 303 036	K20.00012	122	74
1295 303 036	K20.00012	136	74
1295 303 037	K20.00011	122	74
1295 303 037	K20.00011	136	74
1295 303 053	K20.00359	122	77
1295 303 053	K20.00359	136	77
1295 303 054	K20.00357	122	77
1295 303 054	K20.00357	136	77
1295 303 060	K20.00013	122	74
1295 303 060	K20.00013	136	74
1295 303 061	K20.00015	122	75
1295 303 061	K20.00015	136	75
1295 303 066	K20.00359	122	77
1295 303 066	K20.00359	136	77
1295 303 067	K20.00357	122	77
1295 303 067	K20.00357	136	77
1295 303 071	K20.00016	122	76
1295 303 072	K20.00358	122	77
1295 303 094	K20.00015	122	75
1295 303 094	K20.00015	136	75
1295 303 101	K20.00011	122	74
1295 303 101	K20.00011	136	74
1295 303 103	K20.00035	136	75
1295 303 103		K20.00035	
122	75		
1295 303 105	K20.00018	122	76
1295 303 105	K20.00018	136	76
1295 304 002	K20.00020	118	19
1295 304 002	K20.00020	127	5
1295 304 002	K20.00020	127	6
1295 304 002	K20.00020	127	7
1295 304 002	K20.00020	132	19
1295 304 002	K20.00020	141	6
1295 304 002	K20.00020	148	19
1295 304 002	K20.00020	155	5
1295 304 002	K20.00020	155	6
1295 304 002	K20.00020	155	7
1295 304 002	K20.00020	162	19
1295 304 002	K20.00020	169	6
1295 304 002	K20.00020	176	19
1295 304 002	K20.00020	185	5
1295 304 002	K20.00020	185	6
1295 304 002	K20.00020	185	7
1295 304 002	K20.00020	192	19
1295 304 002	K20.00020	201	6
1295 304 004	K20.00021	118	18
1295 304 004	K20.00021	127	1
1295 304 004	K20.00021	127	2
1295 304 004	K20.00021	132	18
1295 304 004	K20.00021	141	2
1295 304 004	K20.00021	148	18
1295 304 004	K20.00021	155	1
1295 304 004	K20.00021	155	2
1295 304 004	K20.00021	162	18
1295 304 004	K20.00021	169	2
1295 304 004	K20.00021	176	18
1295 304 004	K20.00021	185	1
1295 304 004	K20.00021	185	2
1295 304 004	K20.00021	201	2
1295 304 004	K20.00021	192	18
1295 304 012	K20.00352	120	62
1295 304 012	K20.00352	136	62
1295 304 024	K20.00350	120	61
1295 304 120	K20.00030	120	53
1295 304 120	K20.00030	134	53
1295 304 121	K20.00031	120	53
1295 304 121	K20.00031	136	53
1295 304 123	K20.00348	120	60
1295 304 123	K20.00348	136	60
1295 304 127	K20.00023	134	49
1295 304 127	K20.00023	120	50
1295 304 128	K20.00024	120	50
1295 304 128	K20.00024	134	49
1295 304 135	K20.00026	120	47
1295 304 135	K20.00026	134	40
1295 304 136	K20.00027	120	47
1295 304 136	K20.00027	134	40
1295 304 200	K20.00356	122	64
1295 304 200	K20.00356	136	64
1295 304 201	K20.00355	122	64
1295 304 201	K20.00355	136	64
1295 304 202	K20.00349	120	60
1295 304 202	K20.00349	136	60
1295 304 203	K20.00348	120	60
1295 304 203	K20.00348	136	60
1295 304 206	K20.00351	120	61
1295 304 206	K20.00351	136	61
1295 304 236	K20.00028	120	47
1295 304 236	K20.00028	134	40
1295 304 240	K20.01525	122	66
1295 304 240	K20.01525	136	66
1295 304 245	K20.00344	134	51
1295 304 245	K20.00344	120	52
1295 304 248	K20.00036	122	67
1295 304 248	K20.00036	136	67
1295 304 250	K20.00345	120	52
1295 304 250	K20.00345	134	51
1295 304 251	K20.00037	122	69
1295 304 251	K20.00037	136	69
1295 304 269	K20.00022	120	50
1295 304 270	K20.00347	120	60
1295 304 271	K20.00029	120	53
1295 304 272	K20.00354	120	64
1295 304 273	K20.00343	120	52
1295 304 278	K20.00019	118	17
1295 304 278	K20.00019	127	1
1295 304 278	K20.00019	132	17a

Original parts names, oem numbers, symbols and descriptions used in this catalogue are for reference purposes only.

OEM NO	KAÇMAZ NO	PAGE	FIG
1295 304 278	K20.00019	141	1
1295 304 278	K20.00019	148	17a
1295 304 278	K20.00019	155	1
1295 304 278	K20.00019	160	17a
1295 304 278	K20.00019	169	1
1295 304 278	K20.00019	176	17
1295 304 278	K20.00019	185	1
1295 304 278	K20.00019	190	17a
1295 304 278	K20.00019	201	1
1295 304 322	K20.00026	120	47
1295 304 322	K20.00026	134	40
1295 304 324	K20.00024	120	50
1295 304 324	K20.00024	134	49
1295 305 008	K20.00598	122	79
1295 305 008	K20.00598	136	79
1295 305 008	K20.00598	152	81
1295 305 008	K20.00598	166	80
1295 305 008	K20.00598	180	81
1295 305 008	K20.00598	196	80
1295 305 008	K20.00598	214	86
1295 305 008	K20.00598	230	83
1295 305 051	K20.00601	122	81
1295 305 051	K20.00601	136	81
1295 305 051	K20.00601	152	83
1295 305 051	K20.00601	166	82
1295 305 051	K20.00601	180	83
1295 305 052	K20.00600	122	81
1295 305 052	K20.00600	136	81
1295 305 052	K20.00600	152	83
1295 305 052	K20.00600	166	82
1295 305 052	K20.00600	180	83
1295 305 052	K20.00600	196	82
1295 305 056	K20.00598	122	79
1295 305 056	K20.00598	136	79
1295 305 056	K20.00598	152	81
1295 305 056	K20.00598	166	80
1295 305 056	K20.00598	180	81
1295 305 056	K20.00598	196	80
1295 305 056	K20.00598	214	86
1295 305 056	K20.00598	230	83
1295 305 057	K20.00598	152	81
1295 305 057	K20.00598	166	80
1295 305 057	K20.00598	180	81
1295 305 057	K20.00598	196	80
1295 305 057	K20.00598	214	86
1295 305 057	K20.00598	230	83
1295 306 132	K20.00186	118	20
1295 306 132	K20.00186	132	20
1295 306 132	K20.00186	148	20
1295 306 132	K20.00186	162	20
1295 306 132	K20.00186	176	20
1295 306 132	K20.00186	192	20
1295 307 434	K20.00597	116	5
1295 307 434	K20.00597	132	5
1295 307 434	K20.00597	146	5
1295 307 434	K20.00597	160	5
1295 307 434	K20.00597	174	5
1295 307 434	K20.00597	190	5
1295 307 434	K20.00597	206	5
1295 307 434	K20.00597	222	5
1295 307 434	K20.00597	240	6
1295 307 479	K20.00561	116	4
1295 307 479	K20.00561	132	4
1295 307 479	K20.00561	146	4
1295 307 479	K20.00561	160	4
1295 307 479	K20.00561	174	4
1295 307 479	K20.00561	190	4
1295 307 479	K20.00561	206	4
1295 307 479	K20.00561	222	4
1295 307 479	K20.00561	240	5
1295 312 018		118	23
1295 312 018		134	23
1295 332 016	K20.00360	130	1
1295 332 016	K20.00360	144	1
1295 332 016	K20.00360	124	2
1295 332 016	K20.00360	138	2
1295 332 021	K20.00606	124	9
1295 332 021	K20.00606	138	9
1295 332 028	K20.00604	124	7
1295 332 028	K20.00604	138	7
1295 332 051	K20.01661	126	36
1295 332 051	K20.01661	140	34
1295 332 051	K20.01661	154	34
1295 332 051	K20.01661	168	34
1295 332 051	K20.01661	184	36
1295 332 051	K20.01661	200	34
1295 332 051	K20.01661	216	36
1295 332 051	K20.01661	266	44
1295 332 051	K20.01661	324	43
1295 332 053	K20.00604	124	7
1295 332 053	K20.00604	138	7
1295 332 086	K20.00605	124	7
1295 332 086	K20.00605	138	7
1295 332 086	K20.00605	154	7
1295 332 086	K20.00605	168	7
1295 332 086	K20.00605	182	7
1295 332 086	K20.00605	198	7
1295 332 086	K20.00605	216	7
1295 332 086	K20.00605	232	7
1295 332 086	K20.00605	248	9
1295 332 086	K20.00605	264	20
1295 332 086	K20.00605	322	19
1295 334 075	K20.00845	124	26
1295 334 075	K20.00845	138	26
1295 334 075	K20.00845	154	26
1295 334 075	K20.00845	168	26
1295 334 075	K20.00845	182	26
1295 334 075	K20.00845	198	26
1295 334 075	K20.00845	216	26
1295 334 075	K20.00845	232	26
1295 338 014	K20.00369	126	35
1295 338 014	K20.00369	140	33
1295 338 017	K20.00367	126	35
1295 338 091	K20.01962	282	60
1295 338 091	K20.01962	306	60
1295 338 091	K20.01962	340	61
1295 338 145	K20.02145	282	59
1295 338 145	K20.02145	306	59
1295 338 145	K20.02145	340	60
1296 213 028	K20.00556	130	6
1296 213 028	K20.00555	130	7
1296 213 028	K20.00556	158	6
1296 213 028	K20.00555	158	7
1296 213 028	K20.00556	172	6
1296 213 028	K20.00555	172	7
1296 213 028	K20.00556	188	6
1296 213 028	K20.00555	188	7
1296 213 028	K20.00556	204	6
1296 213 028	K20.00555	204	7
1296 213 028	K20.00556	220	6
1296 213 028	K20.00555	220	7
1296 213 028	K20.00556	238	6
1296 213 028	K20.00555	238	7
1296 213 028	K20.00556	251	6
1296 213 028	K20.00555	251	7
1296 213 028	K20.00556	268	6
1296 213 028	K20.00555	268	7
1296 213 028	K20.00556	285	6
1296 213 028	K20.00555	285	7
1296 213 028	K20.00556	309	6
1296 213 028	K20.00555	309	7
1296 213 028	K20.00556	326	6
1296 213 028	K20.00555	326	7
1296 213 028	K20.00556	343	6
1296 213 028	K20.00555	343	7
1296 213 028	K20.00556	366	6
1296 213 028	K20.00555	366	7

Original parts names, oem numbers, symbols and descriptions used in this catalogue are for reference purposes only.

OEM NO	KAÇMAZ NO	PAGE	FIG
1296 213 032		144	10
1296 233 006	K20.00007	124	11
1296 233 006	K20.00007	128	1
1296 233 006	K20.00007	129	1
1296 233 006	K20.00007	138	11
1296 233 006	K20.00007	142	1
1296 233 006	K20.00007	143	1
1296 233 006	K20.00007	154	11
1296 233 006	K20.00007	157	1
1296 233 006	K20.00007	168	11
1296 233 006	K20.00007	171	1
1296 233 006	K20.00007	182	11
1296 233 006	K20.00007	187	1
1296 233 006	K20.00007	198	11
1296 233 006	K20.00007	203	1
1296 233 006	K20.00007	216	11
1296 233 006	K20.00007	219	1
1296 233 006	K20.00007	232	11
1296 233 006	K20.00007	237	1
1296 233 006	K20.00007	248	13
1296 233 006	K20.00007	250	1
1296 298 904	K20.00495	130	
1296 298 904	K20.00495	144	
1296 301 105		132	6
1296 301 129		182	30
1296 301 129		216	30
1296 301 129		234	30
1296 301 133		124	30
1296 301 133		138	28
1296 301 133		154	28
1296 301 133		168	28
1296 301 133		182	30
1296 301 133		200	28
1296 301 133		216	30
1296 301 140		200	31
1296 301 140		216	33
1296 301 140		234	33
1296 301 150		132	6
1296 301 150		160	6
1296 301 180		182	30
1296 301 180		200	28
1296 301 180		216	30
1296 301 195		160	6
1296 301 200		116	6b
1296 301 200		174	6b
1296 301 202		206	6b
1296 301 205		116	6b
1296 301 205		160	6
1296 301 205		174	6b
1296 301 205		190	6
1296 301 205		206	6b
1296 301 206		116	6b
1296 301 206		190	6
1296 301 207		174	6b
1296 301 208		146	6b
1296 301 208		174	6b
1296 301 208		206	6b
1296 301 213		174	6b
1296 301 219		116	6b
1296 301 227		146	6b
1296 301 227		160	6
1296 301 227		190	6
1296 301 227		206	6b
1296 301 228		146	6b
1296 301 228		160	6
1296 301 228		190	6
1296 301 228		206	6b
1296 303 035	K20.00096	212	83
1296 303 036	K20.00094	212	82
1296 303 037	K20.00092	212	81
1296 304 131	K20.00100	210	47
1296 304 135	K20.00346	120	55
1296 304 135	K20.00346	128	1
1296 304 135	K20.00346	128	2
1296 304 135	K20.00346	150	56
1296 304 135	K20.00346	156	2
1296 304 135	K20.00346	156	1
1296 304 135	K20.00346	156	2
1296 304 135	K20.00346	178	56
1296 304 135	K20.00346	186	1
1296 304 135	K20.00346	186	2
1296 312 016	K20.01738	118	25
1296 312 016	K20.01738	134	25
1296 312 016	K20.01738	148	25
1296 312 016	K20.01738	162	25
1296 312 016	K20.01738	176	25
1296 312 016	K20.01738	192	25
1296 312 016	K20.01738	208	22
1296 312 016	K20.01738	224	22
1296 312 016	K20.01738	242	23
1296 312 042	K20.01738	118	25
1296 312 042	K20.01738	134	25
1296 312 042	K20.01738	148	25
1296 312 042	K20.01738	162	25
1296 312 042	K20.01738	176	25
1296 312 042	K20.01738	192	25
1296 312 042	K20.01738	208	22
1296 312 042	K20.01738	224	22
1296 312 042	K20.01738	242	23
1296 312 047		90	27
1296 312 047		118	27
1296 312 047		134	27
1296 312 047		148	27
1296 312 047		162	27
1296 312 047		176	27
1296 312 047		192	27
1296 312 053		90	27
1296 312 053		118	27
1296 312 053		134	27
1296 312 053		148	27
1296 312 053		162	27
1296 312 053		176	27
1296 312 053		192	27
1296 312 056		208	24
1296 312 056		224	24
1296 312 056		242	25
1296 313 067		144	5
1296 313 082		130	5
1296 313 082		158	5
1296 313 082		172	5
1296 313 082		188	5
1296 313 082		204	5
1296 313 082		220	5
1296 313 082		238	5
1296 313 082		251	5
1296 313 082		268	5
1296 313 082		285	5
1296 313 082		309	5
1296 313 082		326	5
1296 313 082		343	5
1296 313 082		366	5
1296 313 083		130	5
1296 313 083		158	5
1296 313 083		172	5
1296 313 083		188	5
1296 313 083		204	5
1296 313 083		220	5
1296 313 083		238	5
1296 313 083		251	5
1296 313 083		268	5
1296 313 083		285	5
1296 313 083		309	5
1296 313 083		326	5
1296 313 083		343	5
1296 313 083		366	5
1296 313 084		130	5
1296 313 084		158	5

Original parts names, oem numbers, symbols and descriptions used in this catalogue are for reference purposes only.

OEM NO	KAÇMAZ NO	PAGE	FIG
1296 313 084		172	5
1296 313 084		188	5
1296 313 084		204	5
1296 313 084		220	5
1296 313 084		238	5
1296 313 084		251	5
1296 313 084		268	5
1296 313 084		285	5
1296 313 084		309	5
1296 313 084		326	5
1296 313 084		343	5
1296 313 084		366	5
1296 313 085		130	5
1296 313 085		158	5
1296 313 085		172	5
1296 313 085		188	5
1296 313 085		204	5
1296 313 085		220	5
1296 313 085		238	5
1296 313 085		251	5
1296 313 085		268	5
1296 313 085		285	5
1296 313 085		309	5
1296 313 085		326	5
1296 313 085		343	5
1296 313 085		366	5
1296 313 086		130	5
1296 313 086		158	5
1296 313 086		172	5
1296 313 086		188	5
1296 313 086		204	5
1296 313 086		220	5
1296 313 086		238	5
1296 313 086		251	5
1296 313 086		268	5
1296 313 086		285	5
1296 313 086		309	5
1296 313 086		326	5
1296 313 086		343	5
1296 313 086		366	5
1296 313 125		130	8
1296 313 125		158	8
1296 313 125		172	8
1296 313 125		188	8
1296 313 125		204	8
1296 313 125		220	8
1296 313 125		238	8
1296 313 125		251	8
1296 313 125		268	8

OEM NO	KAÇMAZ NO	PAGE	FIG
1296 313 125		285	8
1296 313 125		309	8
1296 313 125		326	8
1296 313 125		343	8
1296 313 125		366	8
1296 313 131		130	1
1296 313 131		158	1
1296 313 131		172	1
1296 313 131		188	1
1296 313 131		204	1
1296 313 131		220	1
1296 313 131		238	1
1296 313 131		251	1
1296 313 131		268	1
1296 313 131		285	1
1296 313 131		309	1
1296 313 131		326	1
1296 313 131		343	1
1296 313 131		366	1
1296 313 132		144	3
1296 313 132		144	4
1296 313 160		144	11
1296 313 238		130	3
1296 313 238		158	3
1296 313 238		172	3
1296 313 238		188	3
1296 313 238		204	3
1296 313 238		220	3
1296 313 238		238	3
1296 313 238		251	3
1296 313 238		268	3
1296 313 238		285	3
1296 313 238		309	3
1296 313 238		326	3
1296 313 238		343	3
1296 313 238		366	3
1296 332 005	K20.00384	216	3
1296 332 005	K20.00384	264	2
1296 333 002	K20.00363	124	13
1296 333 002	K20.00363	129	3
1296 333 002	K20.00363	129	3
1296 333 002	K20.00363	138	13
1296 333 002	K20.00363	143	3
1296 333 002	K20.00363	154	13
1296 333 002	K20.00363	157	3
1296 333 002	K20.00363	168	13
1296 333 002	K20.00363	171	3
1296 333 002	K20.00363	182	13
1296 333 002	K20.00363	187	3

OEM NO	KAÇMAZ NO	PAGE	FIG
1296 333 002	K20.00363	198	13
1296 333 002	K20.00363	203	3
1296 333 022	K20.00038	30	16
1296 333 022	K20.00038	58	17
1296 333 022	K20.00038	78	17
1296 333 022	K20.00038	98	16
1296 333 022	K20.00038	124	12
1296 333 022	K20.00038	128	2
1296 333 022	K20.00038	129	2
1296 333 022	K20.00038	138	12
1296 333 022	K20.00038	142	2
1296 333 022	K20.00038	143	2
1296 333 022	K20.00038	154	12
1296 333 022	K20.00038	157	2
1296 333 022	K20.00038	168	12
1296 333 022	K20.00038	171	2
1296 333 022	K20.00038	182	12
1296 333 022	K20.00038	187	2
1296 333 022	K20.00038	198	12
1296 333 022	K20.00038	203	2
1296 333 022	K20.00038	216	12
1296 333 022	K20.00038	219	2
1296 333 022	K20.00038	220	1
1296 333 022	K20.00038	232	12
1296 333 022	K20.00038	237	2
1296 333 022	K20.00038	237	1
1296 333 022	K20.00038	248	14
1296 333 022	K20.00038	250	1
1296 333 022	K20.00038	250	2
1296 333 022	K20.00038	264	26
1296 333 022	K20.00038	268	1
1296 333 022	K20.00038	268	2
1296 333 022	K20.00038	280	15
1296 333 022	K20.00038	284	2
1296 333 022	K20.00038	285	1
1296 333 022	K20.00038	285	2
1296 333 022	K20.00038	304	15
1296 333 022	K20.00038	308	1
1296 333 022	K20.00038	308	2
1296 333 022	K20.00038	309	2
1296 333 022	K20.00038	322	25
1296 333 022	K20.00038	326	1
1296 333 022	K20.00038	338	16
1296 333 022	K20.00038	342	2
1296 333 022	K20.00038	343	1
1296 333 022	K20.00038	343	2
1296 333 022	K20.00038	360	22
1296 333 022	K20.00038	365	1
1296 333 022	K20.00038	365	2

Original parts names, oem numbers, symbols and descriptions used in this catalogue are for reference purposes only.

OEM NO	KAÇMAZ NO	PAGE	FIG
1296 333 022	K20.00038	366	2
1296 333 022	K20.00038	378	16
1296 333 022	K20.00038	381	1
1296 333 023	K20.00039	124	17
1296 333 023	K20.00039	129	6
1296 333 023	K20.00039	129	7
1296 333 023	K20.00039	138	17
1296 333 023	K20.00039	143	6
1296 333 023	K20.00039	143	7
1296 333 023	K20.00039	154	17
1296 333 023	K20.00039	157	6
1296 333 023	K20.00039	157	7
1296 333 023	K20.00039	168	17
1296 333 023	K20.00039	171	6
1296 333 023	K20.00039	171	7
1296 333 023	K20.00039	182	17
1296 333 023	K20.00039	187	6
1296 333 023	K20.00039	187	7
1296 333 023	K20.00039	198	17
1296 333 023	K20.00039	203	6
1296 333 023	K20.00039	203	7
1296 333 023	K20.00039	216	17
1296 333 023	K20.00039	219	6
1296 333 023	K20.00039	220	6
1296 333 023	K20.00039	232	17
1296 333 023	K20.00039	237	6
1296 333 023	K20.00039	248	19
1296 333 023	K20.00039	250	6
1296 333 023	K20.00039	264	32
1296 333 023	K20.00039	268	6
1296 333 023	K20.00039	280	22
1296 333 023	K20.00039	285	6
1296 333 023	K20.00039	285	6
1296 333 023	K20.00039	285	7
1296 333 023	K20.00039	304	22
1296 333 023	K20.00039	308	6
1296 333 023	K20.00039	309	7
1296 333 023	K20.00039	322	31
1296 333 023	K20.00039	326	6
1296 333 023	K20.00039	338	22
1296 333 023	K20.00039	343	6
1296 333 023	K20.00039	343	7
1296 333 023	K20.00039	360	27
1296 333 023	K20.00039	365	6
1296 333 023	K20.00039	366	7
1296 333 039	K20.00220	280	13
1296 333 039	K20.00220	304	13
1296 333 039	K20.00220	338	14
1296 333 045	K20.00038	30	16
1296 333 045	K20.00038	58	17
1296 333 045	K20.00038	78	17
1296 333 045	K20.00038	98	16
1296 333 045	K20.00038	124	12
1296 333 045	K20.00038	128	2
1296 333 045	K20.00038	129	2
1296 333 045	K20.00038	138	12
1296 333 045	K20.00038	142	2
1296 333 045	K20.00038	143	2
1296 333 045	K20.00038	154	12
1296 333 045	K20.00038	157	2
1296 333 045	K20.00038	168	12
1296 333 045	K20.00038	171	2
1296 333 045	K20.00038	182	12
1296 333 045	K20.00038	187	2
1296 333 045	K20.00038	198	12
1296 333 045	K20.00038	203	2
1296 333 045	K20.00038	216	12
1296 333 045	K20.00038	219	2
1296 333 045	K20.00038	220	1
1296 333 045	K20.00038	232	12
1296 333 045	K20.00038	237	2
1296 333 045	K20.00038	237	1
1296 333 045	K20.00038	248	14
1296 333 045	K20.00038	250	1
1296 333 045	K20.00038	250	2
1296 333 045	K20.00038	264	26
1296 333 045	K20.00038	268	1
1296 333 045	K20.00038	268	2
1296 333 045	K20.00038	280	15
1296 333 045	K20.00038	284	2
1296 333 045	K20.00038	285	1
1296 333 045	K20.00038	285	2
1296 333 045	K20.00038	304	15
1296 333 045	K20.00038	308	1
1296 333 045	K20.00038	308	2
1296 333 045	K20.00038	309	2
1296 333 045	K20.00038	322	25
1296 333 045	K20.00038	326	1
1296 333 045	K20.00038	338	16
1296 333 045	K20.00038	342	2
1296 333 045	K20.00038	343	1
1296 333 045	K20.00038	343	2
1296 333 045	K20.00038	360	22
1296 333 045	K20.00038	365	1
1296 333 045	K20.00038	365	2
1296 333 045	K20.00038	366	2
1296 333 045	K20.00038	378	16
1296 333 045	K20.00038	381	1
1296 333 046	K20.00220	280	13
1296 333 046	K20.00220	304	13
1296 333 046	K20.00220	338	14
1296 333 050	K20.00074	280	14
1296 333 050	K20.00074	284	1
1296 333 050	K20.00074	285	1
1296 333 050	K20.00074	304	14
1296 333 050	K20.00074	308	1
1296 333 050	K20.00074	309	1
1296 333 050	K20.00074	338	15
1296 333 050	K20.00074	342	1
1296 333 050	K20.00074	343	1
1296 333 050	K20.00074	360	21
1296 333 050	K20.00074	365	1
1296 333 050	K20.00074	366	1
1296 333 050	K20.00074	378	15
1296 334 004	K20.00341	124	18
1296 334 004	K20.00341	138	18
1296 334 004	K20.00341	154	18
1296 334 004	K20.00341	168	18
1296 334 004	K20.00341	182	18
1296 334 004	K20.00341	198	18
1296 334 004	K20.00341	216	18
1296 334 004	K20.00341	232	18
1296 334 004	K20.00341	248	20
1296 334 004	K20.00341	264	9
1296 334 004	K20.00341	280	25
1296 334 004	K20.00341	304	25
1296 334 004	K20.00341	322	9
1296 334 004	K20.00341	338	26
1296 334 004	K20.00341	360	28
1296 334 039		124	22
1296 334 039		138	22
1296 334 039		154	22
1296 334 039		168	22
1296 334 039		182	22
1296 334 039		198	22
1296 334 039		216	22
1296 334 039		232	22
1296 334 039		264	14
1296 334 039		322	14
1297 202 003	K20.00515	192	32
1297 202 008	K20.00040	148	32
1297 202 009	K20.00514	192	32
1297 202 011	K20.00041	148	32
1297 202 011	K20.00041	176	32
1297 202 023	K20.00515	192	32
1297 202 025	K20.00514	192	32
1297 202 026	K20.00040	148	32

Original parts names, oem numbers, symbols and descriptions used in this catalogue are for reference purposes only.

OEM NO	KAÇMAZ NO	PAGE	FIG
1297 202 043	K20.00516	192	32
1297 202 044	K20.00044	148	42
1297 202 044	K20.00044	176	42
1297 202 045	K20.00042	148	32
1297 202 045	K20.00042	176	32
1297 202 052	K20.00513	162	32
1297 202 053	K20.00564	148	32
1297 202 053	K20.00564	176	32
1297 202 054	K20.00516	192	32
1297 202 061	K20.00043	148	32
1297 202 061	K20.00043	176	32
1297 204 019	K20.00493	128	
1297 204 019	K20.00493	156	
1297 204 019	K20.00493	186	
1297 204 030	K20.00488	127	
1297 204 030	K20.00488	155	
1297 204 030	K20.00488	185	
1297 204 031	K20.00492	128	
1297 204 031	K20.00492	156	
1297 204 031	K20.00492	186	
1297 204 053	K20.00509	142	
1297 204 053	K20.00509	170	
1297 204 053	K20.00509	202	
1297 204 054	K20.00505	141	
1297 204 054	K20.00505	169	
1297 204 054	K20.00505	201	
1297 204 059	K20.00489	127	
1297 204 059	K20.00489	155	
1297 204 059	K20.00489	185	
1297 204 062	K20.00487	127	
1297 204 062	K20.00487	155	
1297 204 062	K20.00487	185	
1297 204 067	K20.00508	142	
1297 204 067	K20.00508	170	
1297 204 067	K20.00508	202	
1297 204 069	K20.00504	141	
1297 204 069	K20.00504	169	
1297 204 069	K20.00504	201	
1297 204 070	K20.00507	142	
1297 204 070	K20.00507	170	
1297 204 070	K20.00507	202	
1297 204 071	K20.00503	141	
1297 204 071	K20.00503	169	
1297 204 071	K20.00503	201	
1297 204 072	K20.00491	128	
1297 204 072	K20.00491	156	
1297 204 072	K20.00491	186	
1297 206 049		150	49
1297 206 049		162	48
1297 206 049		178	49
1297 206 049		192	48
1297 206 050		150	49
1297 206 053		178	49
1297 206 057		150	59
1297 206 058		150	59
1297 206 058		164	58
1297 206 058		178	59
1297 206 058		194	58
1297 206 075		178	59
1297 206 087		150	59
1297 206 088		150	49
1297 206 103		150	49
1297 206 103		162	48
1297 206 103		178	49
1297 206 103		192	48
1297 206 104		150	49
1297 206 105		150	59
1297 206 106		150	59
1297 206 106		164	58
1297 206 106		178	59
1297 206 106		194	58
1297 206 109		178	59
1297 206 110		178	49
1297 206 114		150	59
1297 206 115		150	49
1297 206 162		152	67
1297 206 162		164	66
1297 206 162		178	67
1297 206 162		194	66
1297 206 163		152	67
1297 206 168		152	67
1297 206 174		152	67
1297 206 174		164	66
1297 206 174		178	67
1297 206 174		194	66
1297 206 175		152	67
1297 206 179		152	67
1297 221 002	K20.00043	148	32
1297 221 002	K20.00043	176	32
1297 221 006	K20.00045	148	32
1297 221 008	K20.00046	148	32
1297 221 008	K20.00046	162	32
1297 221 009	K20.00517	192	32
1297 221 010	K20.00047	148	32
1297 232 023	K20.00118	154	2
1297 232 023	K20.00118	156	1
1297 232 023	K20.00118	170	1
1297 232 023	K20.00118	186	1
1297 232 023	K20.00118	202	1
1297 232 023	K20.00118	232	2
1297 232 023	K20.00118	236	1
1297 232 023		K20.00118	
168	2		
1297 232 023		K20.00118	
182	2		
1297 232 023		K20.00118	
198	2		
1297 232 024	K20.00417	124	2
1297 232 024	K20.00417	129	1
1297 232 024	K20.00417	138	2
1297 232 024	K20.00417	144	1
1297 232 024	K20.00417	154	2
1297 232 024	K20.00417	157	1
1297 232 024	K20.00417	168	2
1297 232 024	K20.00417	171	1
1297 232 024	K20.00417	182	2
1297 232 024	K20.00417	187	1
1297 232 024	K20.00417	198	2
1297 232 024	K20.00417	203	1
1297 232 024	K20.00417	124	1
1297 232 026	K20.00603	154	1
1297 232 026	K20.00603	168	1
1297 232 026	K20.00603	182	1
1297 232 026	K20.00603	198	1
1297 232 026	K20.00603	124	1
1297 232 026	K20.00603	138	1
1297 232 027	K20.00613	154	1
1297 232 027	K20.00613	168	1
1297 232 027	K20.00613	182	1
1297 232 027	K20.00613	198	1
1297 232 039	K20.00613	154	1
1297 232 039	K20.00613	168	1
1297 232 039	K20.00613	182	1
1297 232 039	K20.00613	198	1
1297 232 045	K20.00603	124	1
1297 232 045	K20.00603	138	1
1297 232 045	K20.00603	154	1
1297 232 045	K20.00603	168	1
1297 232 045	K20.00603	182	1
1297 232 045	K20.00603	198	1
1297 233 018	K20.00006	124	27
1297 233 018	K20.00006	129	7
1297 233 018	K20.00006	129	8
1297 233 018	K20.00006	138	27
1297 233 018	K20.00006	143	7
1297 233 018	K20.00006	143	8
1297 233 018	K20.00006	154	27

Original parts names, oem numbers, symbols and descriptions used in this catalogue are for reference purposes only.

OEM NO	KAÇMAZ NO	PAGE	FIG
1297 233 018	K20.00006	157	7
1297 233 018	K20.00006	157	8
1297 233 018	K20.00006	171	7
1297 233 018	K20.00006	171	8
1297 233 018	K20.00006	182	27
1297 233 018	K20.00006	187	7
1297 233 018	K20.00006	187	8
1297 233 018	K20.00006	198	27
1297 233 018	K20.00006	203	7
1297 233 018	K20.00006	203	8
1297 233 018	K20.00006	216	27
1297 233 018	K20.00006	219	7
1297 233 018	K20.00006	264	33
1297 233 018	K20.00006	268	7
1297 233 018	K20.00006	322	26
1297 233 018	K20.00006	168	27
1297 233 056	K20.00075	198	27
1297 233 056	K20.00075	203	7
1297 233 056	K20.00075	237	7
1297 233 056	K20.00075	250	7
1297 233 056	K20.00075	322	32
1297 233 056	K20.00075	232	27
1297 233 056	K20.00075	248	29
1297 233 059	K20.00231	32	34
1297 233 059	K20.00231	58	24
1297 233 059	K20.00231	98	23
1297 234 016		232	26
1297 234 021		248	21
1297 298 912	K20.00511	156	
1297 298 912	K20.00511	170	
1297 298 912	K20.00511	186	
1297 298 912	K20.00511	202	
1297 298 912	K20.00511	236	
1297 298 919	K20.00512	129	
1297 298 919	K20.00512	144	
1297 298 919	K20.00512	157	
1297 298 919	K20.00512	171	
1297 298 919	K20.00512	187	
1297 298 919	K20.00512	203	
1297 298 955	K20.00522	217	
1297 298 955	K20.00522	235	
1297 298 955	K20.00522	249	
1297 298 955	K20.00522	267	
1297 298 955	K20.00522	325	
1297 298 955	K20.00522	363	
1297 298 956	K20.00494	128	
1297 298 956	K20.00494	156	
1297 298 956	K20.00494	186	
1297 298 957	K20.00510	142	
1297 298 957	K20.00510	170	
1297 298 957	K20.00510	202	
1297 298 958	K20.00490	127	
1297 298 958	K20.00490	155	
1297 298 958	K20.00490	185	
1297 298 959	K20.00506	141	
1297 298 959	K20.00506	169	
1297 298 959	K20.00506	201	
1297 301 093		194	72
1297 301 105		152	73
1297 301 105		164	72
1297 301 105		180	73
1297 301 105		194	72
1297 301 106		152	73
1297 301 106		164	72
1297 301 106		180	73
1297 301 106		194	72
1297 301 138		178	73
1297 301 146		152	73
1297 301 146		164	72
1297 301 146		180	73
1297 301 146		194	72
1297 301 147		194	72
1297 301 148		152	73
1297 301 148		164	72
1297 301 148		180	73
1297 301 148		194	72
1297 301 154		178	73
1297 302 011	K20.00610	132	1
1297 302 011	K20.00610	160	1
1297 302 012	K20.00594	116	1
1297 302 013	K20.00595	116	1
1297 302 013	K20.00595	146	1
1297 302 015	K20.00596	116	1
1297 302 025	K20.00617	190	1
1297 302 042	K20.00612	146	1
1297 302 042	K20.00612	174	1
1297 302 043	K20.00616	190	1
1297 302 070	K20.00048	146	16
1297 302 070	K20.00048	160	16
1297 302 070	K20.00048	174	16
1297 302 071	K20.00049	148	16
1297 302 071	K20.00049	160	16
1297 302 071	K20.00049	174	16
1297 302 071	K20.00049	190	16
1297 302 079	K20.00051	148	16
1297 302 079	K20.00051	160	16
1297 302 079	K20.00051	176	16
1297 302 079	K20.00051	190	16
1297 302 082	K20.00618	190	1
1297 302 111	K20.00050	148	16
1297 302 111	K20.00050	160	16
1297 302 111	K20.00050	176	16
1297 302 176	K20.00049	148	16
1297 302 176	K20.00049	160	16
1297 302 176	K20.00049	174	16
1297 302 176	K20.00049	190	16
1297 302 177	K20.00048	146	16
1297 302 177	K20.00048	160	16
1297 302 177	K20.00048	174	16
1297 302 231	K20.00564	148	32
1297 302 231	K20.00564	176	32
1297 302 239	K20.00611	146	1
1297 302 239	K20.00611	174	1
1297 302 241	K20.00051	148	16
1297 302 241	K20.00051	160	16
1297 302 241	K20.00051	176	16
1297 302 241	K20.00051	190	16
1297 302 250	K20.00050	148	16
1297 302 250	K20.00050	160	16
1297 302 250	K20.00050	176	16
1297 303 009	K20.00057	152	78
1297 303 009	K20.00057	166	77
1297 303 009	K20.00057	180	78
1297 303 009	K20.00057	194	77
1297 303 010	K20.00056	152	78
1297 303 010	K20.00056	166	77
1297 303 010	K20.00056	180	78
1297 303 025	K20.00059	152	77
1297 303 025	K20.00059	166	76
1297 303 025	K20.00059	180	77
1297 303 026	K20.00062	152	77
1297 303 026	K20.00062	166	76
1297 303 026	K20.00062	180	77
1297 303 026	K20.00062	194	76
1297 303 039	K20.00053	152	76
1297 303 039	K20.00053	164	75
1297 303 039	K20.00053	180	76
1297 303 039	K20.00053	194	75
1297 303 040	K20.00052	152	76
1297 303 040	K20.00052	164	75
1297 303 040	K20.00052	180	76
1297 303 041	K20.00061	152	77
1297 303 041	K20.00061	166	76
1297 303 041	K20.00061	180	77
1297 303 041	K20.00061	194	76
1297 303 042	K20.00058	152	78
1297 303 042	K20.00058	166	77

Original parts names, oem numbers, symbols and descriptions used in this catalogue are for reference purposes only.

OEM NO	KAÇMAZ NO	PAGE	FIG
1297 303 042	K20.00058	180	78
1297 303 042	K20.00058	196	77
1297 303 043	K20.00055	152	76
1297 303 043	K20.00055	166	75
1297 303 043	K20.00055	180	76
1297 303 043	K20.00055	194	75
1297 303 050	K20.00060	152	77
1297 303 050	K20.00060	166	76
1297 303 050	K20.00060	180	77
1297 303 051	K20.00054	152	76
1297 303 051	K20.00054	166	75
1297 303 051	K20.00054	180	76
1297 303 054	K20.00416	152	79
1297 303 054	K20.00416	166	78
1297 303 054	K20.00416	180	79
1297 303 064	K20.00076	196	78
1297 303 064	K20.00076	152	79
1297 303 064	K20.00076	166	78
1297 303 064	K20.00076	180	79
1297 303 065	K20.00062	152	77
1297 303 065	K20.00062	166	76
1297 303 065	K20.00062	180	77
1297 303 065	K20.00062	194	76
1297 303 066	K20.00053	152	76
1297 303 066	K20.00053	164	75
1297 303 066	K20.00053	180	76
1297 303 066	K20.00053	194	75
1297 303 067	K20.00057	152	78
1297 303 067	K20.00057	166	77
1297 303 067	K20.00057	180	78
1297 303 067	K20.00057	194	77
1297 303 072	K20.00059	152	77
1297 303 072	K20.00059	166	76
1297 303 072	K20.00059	180	77
1297 303 073	K20.00056	152	78
1297 303 073	K20.00056	166	77
1297 303 073	K20.00056	180	78
1297 303 074	K20.00052	152	76
1297 303 074	K20.00052	164	75
1297 303 074	K20.00052	180	76
1297 303 075	K20.00416	152	79
1297 303 075	K20.00416	166	78
1297 303 075	K20.00416	180	79
1297 303 086	K20.00055	152	76
1297 303 086	K20.00055	166	75
1297 303 086	K20.00055	180	76
1297 303 086	K20.00055	194	75
1297 303 097	K20.00060	152	77
1297 303 097	K20.00060	166	76
1297 303 097	K20.00060	180	77
1297 303 098	K20.00054	152	76
1297 303 098	K20.00054	166	75
1297 303 098	K20.00054	180	76
1297 303 123	K20.00061	152	77
1297 303 123	K20.00061	166	76
1297 303 123	K20.00061	180	77
1297 303 123	K20.00061	194	76
1297 303 132	K20.00058	152	78
1297 303 132	K20.00058	166	77
1297 303 132	K20.00058	180	78
1297 303 132	K20.00058	196	77
1297 303 140	K20.00076	152	79
1297 303 140	K20.00076	166	78
1297 303 140	K20.00076	180	79
1297 303 140	K20.00076	196	78
1297 304 016	K20.00069	150	54
1297 304 016	K20.00069	164	53
1297 304 016	K20.00069	178	54
1297 304 017	K20.00070	150	54
1297 304 017	K20.00070	164	53
1297 304 017	K20.00070	178	54
1297 304 017	K20.00070	194	53
1297 304 019	K20.00067	150	50
1297 304 019	K20.00067	162	49
1297 304 019	K20.00067	178	50
1297 304 020	K20.00068	150	50
1297 304 020	K20.00068	164	49
1297 304 020	K20.00068	178	50
1297 304 020	K20.00068	192	49
1297 304 025	K20.00063	150	47
1297 304 025	K20.00063	162	40
1297 304 025	K20.00063	178	47
1297 304 026	K20.00064	150	47
1297 304 026	K20.00064	162	40
1297 304 026	K20.00064	178	47
1297 304 026	K20.00064	192	40
1297 304 031	K20.00025	120	48
1297 304 031	K20.00025	127	1
1297 304 031	K20.00025	127	2
1297 304 031	K20.00025	127	3
1297 304 031	K20.00025	150	48
1297 304 031	K20.00025	155	1
1297 304 031	K20.00025	155	2
1297 304 031	K20.00025	155	3
1297 304 031	K20.00025	178	48
1297 304 031	K20.00025	185	1
1297 304 031	K20.00025	185	2
1297 304 031	K20.00025	185	3
1297 304 034	K20.00413	150	64
1297 304 034	K20.00413	164	63
1297 304 034	K20.00413	178	64
1297 304 034	K20.00413	194	63
1297 304 035	K20.00409	150	60
1297 304 035	K20.00409	164	59
1297 304 035	K20.00409	178	60
1297 304 035	K20.00409	194	59
1297 304 041	K20.00304	118	17
1297 304 041	K20.00304	132	17b
1297 304 041	K20.00304	148	17b
1297 304 041	K20.00304	160	17b
1297 304 041	K20.00304	176	17
1297 304 041	K20.00304	190	17b
1297 304 122	K20.00077	150	50
1297 304 122	K20.00077	164	49
1297 304 122	K20.00077	178	50
1297 304 122	K20.00077	194	49
1297 304 148	K20.00415	150	66
1297 304 148	K20.00415	164	65
1297 304 148	K20.00415	178	66
1297 304 148	K20.00415	194	65
1297 304 149	K20.00414	150	66
1297 304 149	K20.00414	164	65
1297 304 149	K20.00414	178	66
1297 304 152	K20.00411	150	62
1297 304 152	K20.00411	164	61
1297 304 152	K20.00411	178	62
1297 304 152	K20.00411	194	61
1297 304 153	K20.00410	150	62
1297 304 153	K20.00410	164	61
1297 304 153	K20.00410	178	62
1297 304 154	K20.00412	150	63
1297 304 154	K20.00412	164	62
1297 304 154	K20.00412	178	63
1297 304 154	K20.00412	194	62
1297 304 175	K20.00065	150	47
1297 304 175	K20.00065	162	40
1297 304 175	K20.00065	178	47
1297 304 176	K20.01526	152	68
1297 304 176	K20.01526	164	67
1297 304 176	K20.01526	178	68
1297 304 176	K20.01526	194	67
1297 304 181	K20.00407	150	52
1297 304 181	K20.00407	164	51
1297 304 181	K20.00407	178	52
1297 304 181	K20.00407	194	51
1297 304 187	K20.00072	152	69
1297 304 187	K20.00072	164	68

Original parts names, oem numbers, symbols and descriptions used in this catalogue are for reference purposes only.

OEM NO	KAÇMAZ NO	PAGE	FIG
1297 304 187	K20.00072	178	69
1297 304 187	K20.00072	194	68
1297 304 192	K20.00073	152	71
1297 304 192	K20.00073	164	70
1297 304 192	K20.00073	178	71
1297 304 192		K20.00073	
194	70		
1297 304 193	K20.00408	150	52
1297 304 193	K20.00408	164	51
1297 304 193	K20.00408	178	52
1297 304 193	K20.00408	194	51
1297 304 195	K20.00071	120	56
1297 304 195	K20.00071	128	1
1297 304 195	K20.00071	128	2
1297 304 195	K20.00071	128	3
1297 304 195	K20.00071	150	57
1297 304 195	K20.00071	156	1
1297 304 195	K20.00071	156	2
1297 304 195	K20.00071	156	3
1297 304 195	K20.00071	178	57
1297 304 195	K20.00071	186	1
1297 304 195	K20.00071	186	2
1297 304 195	K20.00071	186	3
1297 304 196	K20.00032	120	54
1297 304 196	K20.00032	128	1
1297 304 196	K20.00032	150	55
1297 304 196	K20.00032	156	1
1297 304 196	K20.00032	178	55
1297 304 196	K20.00032	186	1
1297 304 260	K20.00064	150	47
1297 304 260	K20.00064	162	40
1297 304 260	K20.00064	178	47
1297 304 260	K20.00064	192	40
1297 304 261	K20.00068	150	50
1297 304 261	K20.00068	164	49
1297 304 261	K20.00068	178	50
1297 304 261		K20.00068	
192	49		
1297 304 266	K20.00067	150	50
1297 304 266	K20.00067	162	49
1297 304 266	K20.00067	178	50
1297 304 267	K20.00063	150	47
1297 304 267	K20.00063	162	40
1297 304 267	K20.00063	178	47
1297 304 269	K20.00069	150	54
1297 304 269	K20.00069	164	53
1297 304 269	K20.00069	178	54
1297 304 270	K20.00410	150	62
1297 304 270	K20.00410	164	61

OEM NO	KAÇMAZ NO	PAGE	FIG
1297 304 270	K20.00410	178	62
1297 304 285	K20.00066	150	47
1297 304 285	K20.00066	162	40
1297 304 285	K20.00066	178	47
1297 304 285	K20.00066	192	40
1297 304 307	K20.00537	228	75
1297 304 318	K20.00065	150	47
1297 304 318	K20.00065	162	40
1297 304 318	K20.00065	178	47
1297 304 369	K20.00078	134	41
1297 304 369	K20.00078	141	1
1297 304 369	K20.00078	162	41
1297 304 369	K20.00078	169	1
1297 304 369	K20.00078	192	41
1297 304 369	K20.00078	201	1
1297 304 371	K20.00079	136	54
1297 304 371	K20.00079	142	1
1297 304 371	K20.00079	164	54
1297 304 371	K20.00079	170	1
1297 304 371	K20.00079	194	54
1297 304 371	K20.00079	202	1
1297 304 381	K20.01526	152	68
1297 304 381	K20.01526	164	67
1297 304 381	K20.01526	178	68
1297 304 381	K20.01526	194	67
1297 304 401	K20.00112	16	41
1297 304 401	K20.00112	20	1
1297 304 401	K20.00112	20	2
1297 304 401	K20.00112	136	55
1297 304 401	K20.00112	142	1
1297 304 401	K20.00112	142	2
1297 304 401	K20.00112	164	55
1297 304 401	K20.00112	170	1
1297 304 401	K20.00112	170	2
1297 304 401	K20.00112	194	55
1297 304 401	K20.00112	202	1
1297 304 401	K20.00112	202	2
1297 304 401	K20.00112	210	58b
1297 304 401	K20.00112	218	2
1297 304 401	K20.00112	218	1
1297 304 401	K20.00112	219	2
1297 304 401	K20.00112	260	70
1297 304 401	K20.00112	267	2
1297 304 401	K20.00112	267	1
1297 304 401	K20.00112	268	2
1297 304 401	K20.00112	316	70
1297 304 401	K20.00112	325	2
1297 304 401	K20.00112	325	1
1297 304 401	K20.00112	326	2

OEM NO	KAÇMAZ NO	PAGE	FIG
1297 304 401	K20.00112	364	2
1297 304 401	K20.00112	365	1
1297 304 401	K20.00112	365	2
1297 304 402	K20.00108	16	31
1297 304 402	K20.00108	19	1
1297 304 402	K20.00108	19	2
1297 304 402	K20.00108	20	2
1297 304 402	K20.00108	134	42
1297 304 402	K20.00108	141	1
1297 304 402	K20.00108	141	2
1297 304 402	K20.00108	162	42
1297 304 402	K20.00108	169	1
1297 304 402	K20.00108	169	2
1297 304 402	K20.00108	192	42
1297 304 402	K20.00108	201	1
1297 304 402	K20.00108	201	2
1297 304 402	K20.00108	208	15
1297 304 402	K20.00108	210	15
1297 304 402	K20.00108	217	2
1297 304 402	K20.00108	235	2
1297 304 402	K20.00108	249	2
1297 304 402	K20.00108	267	2
1297 304 402	K20.00108	274	26
1297 304 402	K20.00108	283	2
1297 304 402	K20.00108	289	6
1297 304 402	K20.00108	290	6
1297 304 402	K20.00108	291	6
1297 304 402	K20.00108	292	6
1297 304 402	K20.00108	296	26
1297 304 402	K20.00108	298	45
1297 304 402	K20.00108	307	2
1297 304 402	K20.00108	325	2
1297 304 402	K20.00108	332	26
1297 304 402	K20.00108	341	2
1297 304 402	K20.00108	341	2
1297 304 402	K20.00108	347	6
1297 304 402	K20.00108	348	6
1297 304 402	K20.00108	349	6
1297 304 402	K20.00108	354	26
1297 304 402	K20.00108	363	2
1297 304 402	K20.00108	222	15
1297 304 402	K20.00108	226	15
1297 304 402	K20.00108	240	16
1297 304 413	K20.00066	150	47
1297 304 413	K20.00066	162	40
1297 304 413	K20.00066	178	47
1297 304 413	K20.00066	192	40
1297 304 414	K20.00077	150	50
1297 304 414	K20.00077	164	49

Original parts names, oem numbers, symbols and descriptions used in this catalogue are for reference purposes only.

OEM NO	KAÇMAZ NO	PAGE	FIG
1297 304 414	K20.00077	178	50
1297 304 414	K20.00077	194	49
1297 304 415	K20.00082	136	57
1297 304 415	K20.00082	142	4
1297 304 415	K20.00082	142	5
1297 304 415	K20.00082	142	6
1297 304 415	K20.00082	164	57
1297 304 415	K20.00082	170	4
1297 304 415	K20.00082	170	5
1297 304 415	K20.00082	170	6
1297 304 415	K20.00082	194	57
1297 304 415	K20.00082	202	4
1297 304 415	K20.00082	202	5
1297 304 415	K20.00082	202	6
1297 304 436	K20.00111	4	41
1297 304 436	K20.00111	8	18
1297 304 436	K20.00111	14	18
1297 304 436	K20.00111	19	3
1297 304 436	K20.00111	19	4
1297 304 436	K20.00111	20	3
1297 304 436	K20.00111	20	4
1297 304 436	K20.00111	24	24
1297 304 436	K20.00111	35	5
1297 304 436	K20.00111	35	4
1297 304 436	K20.00111	52	33
1297 304 436	K20.00111	63	4
1297 304 436	K20.00111	64	5
1297 304 436	K20.00111	65	20
1297 304 436	K20.00111	66	20
1297 304 436	K20.00111	67	20
1297 304 436	K20.00111	74	27
1297 304 436	K20.00111	81	5
1297 304 436	K20.00111	81	4
1297 304 436	K20.00111	81	3
1297 304 436	K20.00111	82	9
1297 304 436	K20.00111	83	9
1297 304 436	K20.00111	92	57
1297 304 436	K20.00111	103	4
1297 304 436	K20.00111	104	5
1297 304 436	K20.00111	105	24
1297 304 436	K20.00111	106	24
1297 304 436	K20.00111	134	44
1297 304 436	K20.00111	141	2
1297 304 436	K20.00111	141	3
1297 304 436	K20.00111	141	4
1297 304 436	K20.00111	142	2
1297 304 436	K20.00111	142	3
1297 304 436	K20.00111	142	4
1297 304 436	K20.00111	162	44
1297 304 436	K20.00111	169	2
1297 304 436	K20.00111	169	3
1297 304 436	K20.00111	169	4
1297 304 436	K20.00111	170	2
1297 304 436	K20.00111	170	3
1297 304 436	K20.00111	170	4
1297 304 436	K20.00111	192	44
1297 304 436	K20.00111	201	2
1297 304 436	K20.00111	201	3
1297 304 436	K20.00111	201	4
1297 304 436	K20.00111	202	2
1297 304 436	K20.00111	202	3
1297 304 436	K20.00111	202	4
1297 304 436	K20.00111	208	32
1297 304 436	K20.00111	217	2
1297 304 436	K20.00111	217	3
1297 304 436	K20.00111	217	4
1297 304 436	K20.00111	218	4
1297 304 436	K20.00111	218	2
1297 304 436	K20.00111	218	3
1297 304 436	K20.00111	219	4
1297 304 436	K20.00111	219	7
1297 304 436	K20.00111	224	32
1297 304 436	K20.00111	235	3
1297 304 436	K20.00111	235	2
1297 304 436	K20.00111	235	3
1297 304 436	K20.00111	235	4
1297 304 436	K20.00111	236	4
1297 304 436	K20.00111	236	3
1297 304 436	K20.00111	236	7
1297 304 436	K20.00111	242	33
1297 304 436	K20.00111	249	3
1297 304 436	K20.00111	249	4
1297 304 436	K20.00111	250	4
1297 304 436	K20.00111	250	7
1297 304 436	K20.00111	256	39
1297 304 436	K20.00111	267	4
1297 304 436	K20.00111	267	2
1297 304 436	K20.00111	267	3
1297 304 436	K20.00111	268	4
1297 304 436	K20.00111	268	7
1297 304 436	K20.00111	274	28
1297 304 436	K20.00111	283	3
1297 304 436	K20.00111	283	4
1297 304 436	K20.00111	284	3
1297 304 436	K20.00111	284	4
1297 304 436	K20.00111	287	12
1297 304 436	K20.00111	288	12
1297 304 436	K20.00111	289	8
1297 304 436	K20.00111	290	8
1297 304 436	K20.00111	291	8
1297 304 436	K20.00111	292	8
1297 304 436	K20.00111	298	29
1297 304 436	K20.00111	307	3
1297 304 436	K20.00111	307	4
1297 304 436	K20.00111	308	4
1297 304 436	K20.00111	308	7
1297 304 436	K20.00111	314	39
1297 304 436	K20.00111	325	3
1297 304 436	K20.00111	325	2
1297 304 436	K20.00111	325	4
1297 304 436	K20.00111	326	4
1297 304 436	K20.00111	326	7
1297 304 436	K20.00111	332	28
1297 304 436	K20.00111	341	3
1297 304 436	K20.00111	341	4
1297 304 436	K20.00111	342	4
1297 304 436	K20.00111	345	12
1297 304 436	K20.00111	346	12
1297 304 436	K20.00111	347	8
1297 304 436	K20.00111	348	8
1297 304 436	K20.00111	349	8
1297 304 436	K20.00111	354	28
1297 304 436	K20.00111	363	3
1297 304 436	K20.00111	363	2
1297 304 436	K20.00111	363	4
1297 304 436	K20.00111	364	3
1297 304 436	K20.00111	364	4
1297 304 436	K20.00111	364	2
1297 304 436	K20.00111	365	7
1297 304 436	K20.00111	365	3
1297 304 436	K20.00111	365	4
1297 304 436	K20.00111	370	22
1297 304 436	K20.00111	381	4
1297 304 436	K20.00111	381	3
1297 304 436	K20.00111	382	12
1297 304 436	K20.00111	383	10
1297 304 436	K20.00111	384	10
1297 304 436	K20.00111	385	10
1297 304 437	K20.00783	44	20
1297 304 439	K20.00073	152	71
1297 304 439	K20.00073	164	70
1297 304 439	K20.00073	178	71
1297 304 439	K20.00073	194	70
1297 304 441	K20.00411	150	62
1297 304 441	K20.00411	164	61
1297 304 441	K20.00411	178	62
1297 304 441	K20.00411	194	61

Original parts names, oem numbers, symbols and descriptions used in this catalogue are for reference purposes only.

OEM NO	KAÇMAZ NO	PAGE	FIG
1297 304 442	K20.00070	150	54
1297 304 442	K20.00070	164	53
1297 304 442	K20.00070	178	54
1297 304 442	K20.00070	194	53
1297 304 445	K20.00428	136	56
1297 304 445	K20.00428	142	1
1297 304 445	K20.00428	142	2
1297 304 445	K20.00428	142	3
1297 304 445	K20.00428	164	56
1297 304 445	K20.00428	170	1
1297 304 445	K20.00428	170	2
1297 304 445	K20.00428	170	3
1297 304 445	K20.00428	194	56
1297 304 445	K20.00428	202	1
1297 304 445	K20.00428	202	2
1297 304 445	K20.00428	202	3
1297 304 446	K20.00081	134	43
1297 304 446	K20.00081	141	1
1297 304 446	K20.00081	141	2
1297 304 446	K20.00081	141	3
1297 304 446	K20.00081	162	43
1297 304 446	K20.00081	169	1
1297 304 446	K20.00081	169	2
1297 304 446	K20.00081	169	3
1297 304 446	K20.00081	192	43
1297 304 446	K20.00081	201	1
1297 304 446	K20.00081	201	2
1297 304 446	K20.00081	201	3
1297 304 448	K20.00098	332	34
1297 304 448	K20.00098	354	34
1297 304 450	K20.00082	136	57
1297 304 450	K20.00082	142	4
1297 304 450	K20.00082	142	5
1297 304 450	K20.00082	142	6
1297 304 450	K20.00082	164	57
1297 304 450	K20.00082	170	4
1297 304 450	K20.00082	170	5
1297 304 450	K20.00082	170	6
1297 304 450	K20.00082	194	57
1297 304 450	K20.00082	202	4
1297 304 450	K20.00082	202	5
1297 304 450	K20.00082	202	6
1297 304 484	K20.00108	16	31
1297 304 484	K20.00108	19	1
1297 304 484	K20.00108	19	2
1297 304 484	K20.00108	20	2
1297 304 484	K20.00108	134	42
1297 304 484	K20.00108	141	2
1297 304 484	K20.00108	141	1
1297 304 484	K20.00108	162	42
1297 304 484	K20.00108	169	1
1297 304 484	K20.00108	169	2
1297 304 484	K20.00108	192	42
1297 304 484	K20.00108	201	1
1297 304 484	K20.00108	201	2
1297 304 484	K20.00108	208	15
1297 304 484	K20.00108	217	2
1297 304 484	K20.00108	235	2
1297 304 484	K20.00108	249	2
1297 304 484	K20.00108	256	36
1297 304 484	K20.00108	267	2
1297 304 484	K20.00108	274	26
1297 304 484	K20.00108	283	2
1297 304 484	K20.00108	289	6
1297 304 484	K20.00108	290	6
1297 304 484	K20.00108	291	6
1297 304 484	K20.00108	292	6
1297 304 484	K20.00108	296	26
1297 304 484	K20.00108	307	2
1297 304 484	K20.00108	314	36
1297 304 484	K20.00108	325	2
1297 304 484	K20.00108	332	26
1297 304 484	K20.00108	341	2
1297 304 484	K20.00108	347	6
1297 304 484	K20.00108	348	6
1297 304 484	K20.00108	349	6
1297 304 484	K20.00108	354	26
1297 304 484	K20.00108	363	2
1297 304 484	K20.00108	210	15
1297 304 484	K20.00108	222	15
1297 304 484	K20.00108	226	15
1297 304 484	K20.00108	240	16
1297 304 485	K20.00112	16	41
1297 304 485	K20.00112	20	1
1297 304 485	K20.00112	20	2
1297 304 485	K20.00112	20	2
1297 304 485	K20.00112	136	55
1297 304 485	K20.00112	142	2
1297 304 485	K20.00112	142	1
1297 304 485	K20.00112	142	2
1297 304 485	K20.00112	164	55
1297 304 485	K20.00112	170	2
1297 304 485	K20.00112	170	1
1297 304 485	K20.00112	170	2
1297 304 485	K20.00112	194	55
1297 304 485	K20.00112	202	2
1297 304 485	K20.00112	202	1
1297 304 485	K20.00112	202	2
1297 304 485	K20.00112	210	58b
1297 304 485	K20.00112	218	2
1297 304 485	K20.00112	218	1
1297 304 485	K20.00112	219	2
1297 304 485	K20.00112	260	70
1297 304 485	K20.00112	267	2
1297 304 485	K20.00112	267	1
1297 304 485	K20.00112	268	2
1297 304 485	K20.00112	316	70
1297 304 485	K20.00112	325	2
1297 304 485	K20.00112	325	1
1297 304 485	K20.00112	326	2
1297 304 485	K20.00112	364	2
1297 304 485	K20.00112	365	1
1297 304 485	K20.00112	365	2
1297 304 515	K20.00103	16	33
1297 304 515	K20.00103	276	47
1297 304 515	K20.00103	288	14
1297 304 515	K20.00103	300	47
1297 304 515	K20.00103	334	47
1297 304 515	K20.00103	345	14
1297 304 515	K20.00103	356	47
1297 305 003	K20.00599	122	81
1297 305 005	K20.00632	246	85
1297 305 008	K20.00632	246	85
1297 305 011	K20.00627	230	85
1297 305 011	K20.00627	246	87
1297 305 012	K20.00626	230	85
1297 305 012	K20.00626	246	87
1297 306 120	K20.00204	44	23
1297 306 120	K20.00204	134	47
1297 306 120	K20.00204	162	47
1297 306 120	K20.00204	192	47
1297 306 120	K20.00204	208	17
1297 306 120	K20.00204	224	17
1297 306 120	K20.00204	240	18
1297 306 120	K20.00204	254	9
1297 306 120	K20.00204	312	9
1297 312 008		148	23
1297 312 008		162	23
1297 312 008		176	23
1297 312 008		192	23
1297 313 231	K20.00609	124	29
1297 313 231	K20.00609	182	29
1297 313 231	K20.00609	216	29
1297 313 231	K20.00609	234	29
1297 332 002		264	19
1297 332 005	K20.00418	124	3
1297 332 005	K20.00418	129	2

Original parts names, oem numbers, symbols and descriptions used in this catalogue are for reference purposes only.

OEM NO	KAÇMAZ NO	PAGE	FIG
1297 332 005	K20.00418	138	3
1297 332 005	K20.00418	144	2
1297 332 005	K20.00418	154	3
1297 332 005	K20.00418	156	2
1297 332 005	K20.00418	157	2
1297 332 005	K20.00418	168	3
1297 332 005	K20.00418	170	2
1297 332 005	K20.00418	171	2
1297 332 005	K20.00418	182	3
1297 332 005	K20.00418	186	2
1297 332 005	K20.00418	187	2
1297 332 005	K20.00418	198	3
1297 332 005	K20.00418	202	2
1297 332 005	K20.00418	203	2
1297 332 005	K20.00418	232	3
1297 332 005	K20.00418	236	2
1297 332 017	K20.00615	154	9
1297 332 017	K20.00615	168	9
1297 332 017	K20.00615	182	9
1297 332 017	K20.00615	198	9
1297 332 020	K20.00631	232	9
1297 332 022	K20.00118	154	2
1297 332 022	K20.00118	156	1
1297 332 022	K20.00118	168	2
1297 332 022	K20.00118	170	1
1297 332 022	K20.00118	182	2
1297 332 022	K20.00118	186	1
1297 332 022	K20.00118	198	2
1297 332 022	K20.00118	202	1
1297 332 022	K20.00118	232	2
1297 332 022	K20.00118	236	1
1297 332 028	K20.00417	124	2
1297 332 028	K20.00417	129	1
1297 332 028	K20.00417	138	2
1297 332 028	K20.00417	144	1
1297 332 028	K20.00417	154	2
1297 332 028	K20.00417	157	1
1297 332 028	K20.00417	171	1
1297 332 028	K20.00417	182	2
1297 332 028	K20.00417	187	1
1297 332 028	K20.00417	203	1
1297 332 028	K20.00417	168	2
1297 332 028	K20.00417	198	2
1297 332 035	K20.00607	124	9
1297 332 035	K20.00607	138	9
1297 332 035	K20.00607	154	9
1297 332 035	K20.00607	168	9
1297 332 035	K20.00607	182	9
1297 332 035	K20.00607	198	9
1297 332 036	K20.00614	154	7
1297 332 036	K20.00614	168	7
1297 332 036	K20.00614	182	7
1297 332 036	K20.00614	198	7
1297 332 036	K20.00614	232	7
1297 332 080	K20.00614	154	7
1297 332 080	K20.00614	168	7
1297 332 080	K20.00614	182	7
1297 332 080	K20.00614	198	7
1297 332 080	K20.00614	232	7
1297 332 108	K20.00630	232	9
1297 332 109	K20.00418	124	3
1297 332 109	K20.00418	129	2
1297 332 109	K20.00418	138	3
1297 332 109	K20.00418	144	2
1297 332 109	K20.00418	154	3
1297 332 109	K20.00418	156	2
1297 332 109	K20.00418	157	2
1297 332 109	K20.00418	170	2
1297 332 109	K20.00418	171	2
1297 332 109	K20.00418	186	2
1297 332 109	K20.00418	187	2
1297 332 109	K20.00418	202	2
1297 332 109	K20.00418	203	2
1297 332 109	K20.00418	232	3
1297 332 109	K20.00418	236	2
1297 332 109		K20.00418	
168	3		
1297 332 109		K20.00418	
182	3		
1297 332 109		K20.00418	
198	3		
1297 332 120	K20.00620	198	9
1297 332 120	K20.00620	248	11
1297 332 120	K20.00620	322	23
1297 332 122		264	19
1297 333 110	K20.00427	200	33
1297 333 110	K20.00427	234	35
1297 333 110	K20.00427	282	43
1297 333 110	K20.00427	324	41
1297 333 110	K20.00427	362	46
1297 333 110	K20.00427	306	43
1297 333 110	K20.00427	340	44
1297 333 115	K20.00148	198	13
1297 333 115	K20.00148	232	13
1297 333 115	K20.00148	237	2
1297 333 115	K20.00148	248	15
1297 333 115	K20.00148	250	2
1297 333 117	K20.00608	124	28
1297 333 118	K20.00386	182	28
1297 333 118	K20.00386	216	28
1297 334 053		44	34
1297 334 055	K20.01868	232	26
1297 334 055	K20.01868	248	28
1297 334 056		232	22
1297 334 056		248	24
1297 338 010	K20.00371	126	35
1297 338 010	K20.00371	140	33
1297 338 010	K20.00371	154	33
1297 338 010	K20.00371	184	35
1297 338 010	K20.00371	200	33
1297 338 010	K20.00371	248	35
1297 338 038	K20.00429	154	33
1297 338 038	K20.00429	168	33
1297 338 038	K20.00429	184	35
1297 338 041	K20.00370	168	33
1297 338 041	K20.00370	184	35
1297 338 041	K20.00370	248	35
1297 338 051	K20.00518	200	33
1304 201 043		80	40
1304 201 072		56	69
1304 201 073		56	69
1304 201 081		56	69
1304 201 082		56	69
1304 201 085		96	90
1304 201 086		96	90
1304 201 100		96	90
1304 202 102	K20.00269	50	7
1304 202 105	K20.00278	50	7
1304 202 168	K20.00275	50	7
1304 202 168	K20.00275	68	3
1304 202 170	K20.00269	50	7
1304 202 171	K20.00270	50	7
1304 202 171	K20.00270	69	3
1304 202 175	K20.00276	50	7
1304 202 175	K20.00276	68	3
1304 202 177	K20.00277	50	7
1304 202 177	K20.00277	68	3
1304 202 178	K20.00278	50	7
1304 202 201	K20.00224	88	14
1304 202 201	K20.00224	109	8
1304 202 201	K20.00224	110	8
1304 202 202	K20.00225	88	14
1304 202 202	K20.00225	107	8
1304 202 202	K20.00225	108	8
1304 202 203	K20.00226	88	14
1304 202 203	K20.00226	111	8
1304 202 205	K20.01926	22	13

Original parts names, oem numbers, symbols and descriptions used in this catalogue are for reference purposes only.

OEM NO	KAÇMAZ NO	PAGE	FIG
1304 202 206	K20.01927	22	13
1304 202 207	K20.01925	22	13
1304 202 208	K20.01922	22	13
1304 202 210	K20.01923	22	13
1304 202 211	K20.01928	22	13
1304 202 212	K20.01924	22	13
1304 202 214	K20.00915	24	18
1304 202 214	K20.00915	35	1
1304 202 245	K20.00274	50	7
1304 202 252	K20.00575	50	7
1304 202 252	K20.00575	68	3
1304 202 255	K20.00330	88	14
1304 202 255	K20.00330	112	8
1304 202 259	K20.00224	88	14
1304 202 259	K20.00224	109	8
1304 202 259	K20.00224	110	8
1304 202 260	K20.00225	88	14
1304 202 260	K20.00225	107	8
1304 202 260	K20.00225	108	8
1304 202 261	K20.00226	111	8
1304 202 264	K20.00330	88	14
1304 202 264	K20.00330	112	8
1304 203 008	K20.00558	50	3
1304 203 008	K20.00558	88	5
1304 204 040	K20.00920	35	
1304 204 049	K20.00479	103	
1304 204 050	K20.00476	103	
1304 204 051	K20.00552	63	
1304 204 052	K20.00549	63	
1304 204 056	K20.00921	35	
1304 207 016		56	70
1304 207 016		96	91
1304 207 024	K20.00814	56	70
1304 207 024	K20.00814	96	91
1304 207 277		36	12
1304 232 022	K20.00338	100	48
1304 232 025	K20.00280	60	49
1304 232 026	K20.00227	100	48
1304 232 037	K20.00279	58	6
1304 232 048	K20.00580	58	2
1304 232 051		30	4
1304 232 054	K20.00228	98	4
1304 232 083	K20.00323	32	35
1304 232 083	K20.00323	58	25
1304 232 083	K20.00323	78	36
1304 232 083	K20.00323	98	24
1304 232 085	K20.00323	32	35
1304 232 085	K20.00323	58	25
1304 232 085	K20.00323	78	36
1304 232 085	K20.00323	98	24
1304 232 086	K20.00588	100	45
1304 232 087	K20.00588	100	45
1304 232 088	K20.00587	98	2
1304 232 088	K20.01061	98	3
1304 232 089	K20.00587	98	2
1304 232 089	K20.01061	98	3
1304 232 090	K20.00581	60	46
1304 232 091	K20.00581	60	46
1304 232 092		30	2
1304 232 094	K20.00587	98	2
1304 232 094	K20.01061	98	3
1304 232 095	K20.00580	58	2
1304 232 095	K20.01060	58	3
1304 233 004	K20.00229	32	51
1304 233 004	K20.00229	60	56
1304 233 004	K20.00229	102	56
1304 233 005	K20.00229	32	51
1304 233 005	K20.00229	60	56
1304 233 005	K20.00229	102	56
1304 233 006	K20.00230	30	15
1304 233 006	K20.00230	58	16
1304 233 006	K20.00230	78	16
1304 233 006	K20.00230	98	15
1304 233 011	K20.00230	30	15
1304 233 011	K20.00230	58	16
1304 233 011	K20.00230	78	16
1304 233 011	K20.00230	98	15
1304 233 013	K20.00231	32	34
1304 233 013	K20.00231	58	24
1304 233 013	K20.00231	98	23
1304 298 902	K20.01583	36	
1304 298 902	K20.01583	64	
1304 298 902	K20.01583	104	
1304 298 914	K20.01583	36	
1304 298 914	K20.01583	64	
1304 298 914	K20.01583	104	
1304 298 939	K20.02150	36	
1304 298 964	K20.00912	35	
1304 298 965	K20.00914	35	
1304 298 968	K20.00481	104	
1304 298 969	K20.00478	103	
1304 298 970	K20.00553	64	
1304 298 971	K20.00551	63	
1304 298 980	K20.00480	63	
1304 298 980	K20.00480	103	
1304 298 981	K20.00477	103	
1304 298 982	K20.00550	63	
1304 301 016		62	72
1304 301 016		102	72
1304 301 021		36	10
1304 301 021		64	10
1304 301 021		104	10
1304 301 030		32	36
1304 301 030		36	9
1304 301 030		64	9
1304 301 030		104	9
1304 301 034		32	39
1304 301 034		46	40
1304 301 034		60	43
1304 301 034		80	49
1304 301 034		100	42
1304 301 063		32	36
1304 301 063		36	9
1304 301 063		64	9
1304 301 063		104	9
1304 301 089		62	72
1304 301 089		102	72
1304 301 109		36	10
1304 301 109		64	10
1304 301 109		104	10
1304 301 198	K20.00574	50	4
1304 301 198	K20.00574	88	6
1304 301 305		80	38
1304 301 315		62	69
1304 301 315		102	69
1304 301 316		34	65
1304 301 318		42	75
1304 301 321		32	37
1304 301 331	K20.00574	50	4
1304 301 331	K20.00574	88	6
1304 301 332		22	9
1304 301 337		26	52
1304 301 351		60	41
1304 301 351		100	40
1304 301 360		34	65
1304 301 360		62	69
1304 301 360		102	69
1304 301 375		26	52
1304 301 380		100	36
1304 301 381		32	37
1304 301 382		60	37
1304 301 410		80	43
1304 301 413	K20.00574	50	4
1304 301 413	K20.00574	88	6
1304 302 006	K20.00234	88	12
1304 302 006	K20.00234	103	1
1304 302 006	K20.00234	107	6

Original parts names, oem numbers, symbols and descriptions used in this catalogue are for reference purposes only.

OEM NO	KAÇMAZ NO	PAGE	FIG
1304 302 006	K20.00234	108	6
1304 302 006	K20.00234	109	6
1304 302 006	K20.00234	110	6
1304 302 006	K20.00234	111	6
1304 302 006	K20.00234	112	6
1304 302 137	K20.00232	88	11
1304 302 137	K20.00232	107	5
1304 302 137	K20.00232	109	5
1304 302 137	K20.00232	111	5
1304 302 137	K20.00232	112	5
1304 302 150	K20.00233	88	11
1304 302 150	K20.00233	108	5
1304 302 150	K20.00233	110	5
1304 302 169	K20.00232	88	11
1304 302 169	K20.00232	107	5
1304 302 169	K20.00232	109	5
1304 302 169	K20.00232	111	5
1304 302 169	K20.00232	112	5
1304 302 188	K20.00234	88	12
1304 302 188	K20.00234	103	1
1304 302 188	K20.00234	107	6
1304 302 188	K20.00234	108	6
1304 302 188	K20.00234	109	6
1304 302 188	K20.00234	110	6
1304 302 188	K20.00234	111	6
1304 302 188	K20.00234	112	6
1304 302 213	K20.00571	50	1
1304 302 213	K20.00571	88	3
1304 302 215		50	1
1304 302 216	K20.00572	50	1
1304 302 216	K20.00572	88	3
1304 302 232		22	5
1304 302 232		88	2
1304 302 316	K20.00571	50	1
1304 302 316	K20.00571	88	3
1304 302 318		50	1
1304 302 319	K20.00572	50	1
1304 302 319	K20.00572	88	3
1304 302 350		22	6
1304 302 350		72	1
1304 302 352		22	6
1304 302 354		72	1
1304 302 355		22	6
1304 302 356		22	6
1304 302 361		22	6
1304 302 366		22	2
1304 302 371		22	3
1304 302 381		22	6
1304 302 384	K20.00275	50	7
1304 302 384	K20.00275	68	3
1304 302 386	K20.00276	50	7
1304 302 386	K20.00276	68	3
1304 302 388	K20.00277	50	7
1304 302 388	K20.00277	68	3
1304 302 391	K20.00270	50	7
1304 302 391	K20.00270	69	3
1304 302 403	K20.00224	88	14
1304 302 403	K20.00224	109	8
1304 302 403	K20.00224	110	8
1304 302 404	K20.00225	88	14
1304 302 404	K20.00225	107	8
1304 302 404	K20.00225	108	8
1304 302 405	K20.00226	88	14
1304 302 405	K20.00226	111	8
1304 302 425	K20.00919	24	19
1304 302 425	K20.00919	35	7
1304 302 440	K20.01501	22	14
1304 302 440	K20.01501	50	8
1304 302 440	K20.01501	68	4
1304 302 440	K20.01501	69	4
1304 302 440	K20.01501	72	18
1304 302 440	K20.01501	84	4
1304 302 440	K20.01501	85	4
1304 302 440	K20.01501	88	15
1304 302 440	K20.01501	107	12
1304 302 440	K20.01501	108	12
1304 302 440	K20.01501	109	12
1304 302 440	K20.01501	110	12
1304 302 440	K20.01501	111	12
1304 302 440	K20.01501	112	12
1304 302 444	K20.00573	50	1
1304 302 444	K20.00573	88	3
1304 302 474		50	1
1304 302 490	K20.00575	50	7
1304 302 490	K20.00575	68	3
1304 302 494	K20.00330	88	14
1304 302 494	K20.00330	112	8
1304 303 151	K20.00286	56	61
1304 303 151	K20.00286	70	5
1304 303 153	K20.00316	56	62
1304 303 153	K20.00316	70	6
1304 303 171	K20.00284	56	61
1304 303 172	K20.00314	56	62
1304 303 175	K20.00238	94	82
1304 303 175	K20.00238	114	5
1304 303 192	K20.00240	94	83
1304 303 192	K20.00240	114	6
1304 303 209	K20.00313	56	62
1304 303 209	K20.00313	69	6
1304 303 210	K20.00283	56	61
1304 303 210	K20.00283	69	5
1304 303 212	K20.00237	94	82
1304 303 212	K20.00237	113	5
1304 303 214	K20.00239	94	83
1304 303 214	K20.00239	113	6
1304 303 243	K20.00316	56	62
1304 303 243	K20.00316	70	6
1304 303 244	K20.00286	56	61
1304 303 244	K20.00286	70	5
1304 303 267	K20.00319	56	63
1304 303 267	K20.00319	70	7
1304 303 268	K20.00318	56	63
1304 303 268	K20.00318	70	7
1304 303 269	K20.00317	56	63
1304 303 269	K20.00317	69	7
1304 303 272	K20.00282	56	60
1304 303 272	K20.00282	70	4
1304 303 273	K20.00235	94	81
1304 303 273	K20.00235	113	4
1304 303 276	K20.00242	94	84
1304 303 276	K20.00242	113	7
1304 303 277	K20.00241	94	84
1304 303 277	K20.00241	113	7
1304 303 279	K20.00243	94	84
1304 303 279	K20.00243	114	7
1304 303 283	K20.00236	94	81
1304 303 283	K20.00236	114	4
1304 303 285	K20.00281	56	60
1304 303 285	K20.00281	69	4
1304 303 286	K20.00315	56	62
1304 303 286	K20.00315	70	6
1304 303 287	K20.00285	56	61
1304 303 287	K20.00285	70	5
1304 303 289	K20.01942	28	61
1304 303 291	K20.01941	28	59
1304 303 292	K20.01940	28	58
1304 303 293	K20.01939	28	57
1304 303 294	K20.01938	28	56
1304 303 297		36	5
1304 303 297		64	5
1304 303 297		104	5
1304 303 322	K20.01943	28	62
1304 304 007	K20.00263	26	44
1304 304 007	K20.00263	92	70
1304 304 007	K20.00263	105	30
1304 304 007	K20.00263	106	30
1304 304 012	K20.00247	90	39

OEM NO	KAÇMAZ NO	PAGE	FIG
1304 304 012	K20.00247	103	1
1304 304 012	K20.00247	105	8
1304 304 012	K20.00247	106	8
1304 304 013	K20.00298	50	19
1304 304 013	K20.00298	63	5
1304 304 013	K20.00298	63	6
1304 304 013	K20.00298	63	7
1304 304 013	K20.00298	65	10
1304 304 013	K20.00298	66	10
1304 304 013	K20.00298	67	10
1304 304 014	K20.00260	50	14
1304 304 014	K20.00260	63	2
1304 304 014	K20.00260	65	5
1304 304 014	K20.00260	66	5
1304 304 014	K20.00260	67	5
1304 304 014	K20.00260	90	40
1304 304 014	K20.00260	103	2
1304 304 014	K20.00260	105	9
1304 304 014	K20.00260	106	9
1304 304 050	K20.00320	52	26
1304 304 050	K20.00320	65	14
1304 304 050	K20.00320	66	14
1304 304 050	K20.00320	67	14
1304 304 050	K20.00320	74	37
1304 304 050	K20.00320	82	15
1304 304 050	K20.00320	83	15
1304 304 051	K20.00296	50	15
1304 304 051	K20.00296	63	1
1304 304 051	K20.00296	63	3
1304 304 051	K20.00296	65	6
1304 304 051	K20.00296	66	6
1304 304 051	K20.00296	67	6
1304 304 056	K20.00295	50	13
1304 304 056	K20.00295	63	1
1304 304 056	K20.00295	65	4
1304 304 056	K20.00295	66	4
1304 304 056	K20.00295	67	4
1304 304 064	K20.00320	74	37
1304 304 199	K20.00258	98	1
1304 304 261	K20.00256	98	1
1304 304 331	K20.00290	52	23
1304 304 331	K20.00290	66	11
1304 304 334	K20.00293	52	28
1304 304 337	K20.00306	52	42
1304 304 337	K20.00306	66	23
1304 304 358	K20.00332	92	69
1304 304 365	K20.00288	52	23
1304 304 367	K20.00291	52	28
1304 304 367	K20.00291	67	16
1304 304 369	K20.00300	52	42
1304 304 376	K20.00334	92	69
1304 304 376	K20.00334	106	29
1304 304 408	K20.00261	52	29
1304 304 408	K20.00261	63	1
1304 304 408	K20.00261	64	1
1304 304 408	K20.00261	65	17
1304 304 408	K20.00261	66	17
1304 304 408	K20.00261	67	17
1304 304 408	K20.00261	92	54
1304 304 408	K20.00261	103	1
1304 304 408	K20.00261	104	1
1304 304 408	K20.00261	105	21
1304 304 408	K20.00261	106	21
1304 304 417	K20.00249	92	50
1304 304 417	K20.00249	106	16
1304 304 420	K20.00250	92	53
1304 304 422	K20.00251	92	53
1304 304 422	K20.00251	106	20
1304 304 426	K20.00310	54	47
1304 304 426	K20.00310	66	28
1304 304 428	K20.00308	54	47
1304 304 428	K20.00308	67	28
1304 304 435	K20.00312	54	54
1304 304 435	K20.00312	66	33
1304 304 437	K20.00353	54	54
1304 304 437	K20.00353	67	33
1304 304 443	K20.00080	54	48
1304 304 443	K20.00080	65	29
1304 304 443	K20.00080	66	29
1304 304 443	K20.00080	67	29
1304 304 443	K20.00080	76	56
1304 304 444	K20.00311	54	49
1304 304 444	K20.00311	65	30
1304 304 444	K20.00311	66	30
1304 304 444	K20.00311	67	30
1304 304 444	K20.00311	76	57
1304 304 444	K20.00311	82	29
1304 304 444	K20.00311	83	29
1304 304 448	K20.00294	58	1
1304 304 449	K20.00307	52	44
1304 304 449	K20.00307	65	25
1304 304 449	K20.00307	66	25
1304 304 449	K20.00307	67	25
1304 304 471	K20.00303	52	42
1304 304 471	K20.00303	67	23
1304 304 472	K20.00287	52	23
1304 304 472	K20.00287	67	11
1304 304 475	K20.00248	92	50
1304 304 475	K20.00248	105	16
1304 304 496	K20.00259	88	13
1304 304 496	K20.00259	103	2
1304 304 496	K20.00259	107	7
1304 304 496	K20.00259	108	7
1304 304 496	K20.00259	109	7
1304 304 496	K20.00259	110	7
1304 304 496	K20.00259	111	7
1304 304 496	K20.00259	112	7
1304 304 497	K20.00250	92	53
1304 304 497	K20.00250	105	20
1304 304 498	K20.00306	52	42
1304 304 498	K20.00306	66	23
1304 304 499	K20.00293	52	28
1304 304 499	K20.00293	66	16
1304 304 500	K20.00290	52	23
1304 304 500	K20.00290	66	11
1304 304 515	K20.00252	92	42
1304 304 515	K20.00252	103	1
1304 304 515	K20.00252	103	3
1304 304 515	K20.00252	105	11
1304 304 515	K20.00252	106	11
1304 304 516	K20.00245	90	38
1304 304 516	K20.00245	105	7
1304 304 518	K20.00246	90	38
1304 304 518	K20.00246	106	7
1304 304 541	K20.00255	8	19
1304 304 541	K20.00255	24	38
1304 304 541	K20.00255	35	6
1304 304 541	K20.00255	35	5
1304 304 541	K20.00255	52	34
1304 304 541	K20.00255	74	43
1304 304 541	K20.00255	92	60
1304 304 541	K20.00255	103	5
1304 304 541	K20.00255	104	6
1304 304 542	K20.00262	52	30
1304 304 542	K20.00262	63	2
1304 304 542	K20.00262	64	2
1304 304 542	K20.00262	65	17
1304 304 542	K20.00262	66	17
1304 304 542	K20.00262	67	18
1304 304 542	K20.00262	92	55
1304 304 542	K20.00262	103	2
1304 304 542	K20.00262	104	2
1304 304 542	K20.00262	105	22
1304 304 542	K20.00262	106	22
1304 304 542	K20.00262	63	1
1304 304 543	K20.00309	54	47
1304 304 543	K20.00309	65	28

Original parts names, oem numbers, symbols and descriptions used in this catalogue are for reference purposes only.

OEM NO	KAÇMAZ NO	PAGE	FIG
1304 304 543	K20.00309	76	55
1304 304 543	K20.00309	82	27
1304 304 543	K20.00309	83	27
1304 304 549	K20.00333	92	69
1304 304 549	K20.00333	105	29
1304 304 553	K20.00462	54	54
1304 304 553	K20.00462	65	33
1304 304 553	K20.00462	76	62
1304 304 553	K20.00462	82	31
1304 304 553	K20.00462	83	31
1304 304 569	K20.00305	52	42
1304 304 569	K20.00305	65	23
1304 304 570	K20.00292	52	28
1304 304 570	K20.00292	65	16
1304 304 571	K20.00289	52	23
1304 304 571	K20.00289	65	11
1304 304 576	K20.00913	24	37
1304 304 576	K20.00913	35	3
1304 304 576	K20.00913	35	2
1304 304 581	K20.01933	24	34
1304 304 582	K20.01932	24	34
1304 304 586	K20.01935	26	43
1304 304 587	K20.01934	26	43
1304 304 588	K20.01937	30	1
1304 304 591	K20.00297	52	31
1304 304 591	K20.00297	63	2
1304 304 591	K20.00297	64	3
1304 304 591	K20.00297	65	19
1304 304 591	K20.00297	66	19
1304 304 591	K20.00297	67	19
1304 304 591	K20.00297	74	42
1304 304 591	K20.00297	81	3
1304 304 591	K20.00297	81	2
1304 304 591	K20.00297	82	20
1304 304 591	K20.00297	83	20
1304 304 597	K20.00255	8	19
1304 304 597	K20.00255	24	38
1304 304 597	K20.00255	35	6
1304 304 597	K20.00255	35	5
1304 304 597	K20.00255	52	34
1304 304 597	K20.00255	63	5
1304 304 597	K20.00255	64	6
1304 304 597	K20.00255	65	22
1304 304 597	K20.00255	66	22
1304 304 597	K20.00255	67	22
1304 304 597	K20.00255	74	43
1304 304 597	K20.00255	81	6
1304 304 597	K20.00255	81	5
1304 304 597	K20.00255	82	21
1304 304 597	K20.00255	83	21
1304 304 597	K20.00255	92	60
1304 304 597	K20.00255	103	5
1304 304 597	K20.00255	104	6
1304 304 597	K20.00255	105	27
1304 304 597	K20.00255	106	27
1304 304 604	K20.01931	24	32
1304 304 608	K20.00257	98	1
1304 304 623	K20.00701	4	34
1304 304 630	K20.00331	92	51
1304 304 630	K20.00331	105	18
1304 304 630	K20.00331	106	18
1304 304 636	K20.01930	24	30
1304 304 637	K20.01929	24	30
1304 304 645	K20.00705	4	38
1304 304 649	K20.00701	4	34
1304 304 651	K20.00917	24	22
1304 304 651	K20.00917	35	3
1304 304 651	K20.00917	35	2
1304 304 653	K20.00254	92	56
1304 304 653	K20.00254	103	2
1304 304 653	K20.00254	104	3
1304 304 653	K20.00254	105	23
1304 304 653	K20.00254	106	23
1304 304 660	K20.00295	50	13
1304 304 660	K20.00295	63	1
1304 304 660	K20.00295	65	4
1304 304 660	K20.00295	66	4
1304 304 660	K20.00295	67	4
1304 304 664	K20.00918	24	26
1304 304 664	K20.00918	35	6
1304 304 664	K20.00918	35	5
1304 304 669	K20.00335	94	73
1304 304 670	K20.00337	94	73
1304 304 670	K20.00337	106	33
1304 304 671	K20.00336	94	73
1304 304 671	K20.00336	105	33
1304 304 672	K20.01936	26	47
1304 304 680	K20.00259	88	13
1304 304 680	K20.00259	103	2
1304 304 680	K20.00259	107	7
1304 304 680	K20.00259	108	7
1304 304 680	K20.00259	109	7
1304 304 680	K20.00259	110	7
1304 304 680	K20.00259	111	7
1304 304 680	K20.00259	112	7
1304 304 681	K20.00262	52	30
1304 304 681	K20.00262	63	1
1304 304 681	K20.00262	63	2
1304 304 681	K20.00262	64	2
1304 304 681	K20.00262	65	18
1304 304 681	K20.00262	66	18
1304 304 681	K20.00262	67	18
1304 304 681	K20.00262	92	55
1304 304 681	K20.00262	103	1
1304 304 681	K20.00262	103	2
1304 304 681	K20.00262	104	2
1304 304 681	K20.00262	105	22
1304 304 681	K20.00262	106	22
1304 304 683	K20.00260	50	14
1304 304 683	K20.00260	63	2
1304 304 683	K20.00260	63	2
1304 304 683	K20.00260	65	5
1304 304 683	K20.00260	66	5
1304 304 683	K20.00260	67	5
1304 304 683	K20.00260	90	40
1304 304 683	K20.00260	103	2
1304 304 683	K20.00260	105	9
1304 304 683	K20.00260	106	9
1304 304 686	K20.00021	118	18
1304 304 686	K20.00021	127	1
1304 304 686	K20.00021	127	2
1304 304 686	K20.00021	132	18
1304 304 686	K20.00021	141	2
1304 304 686	K20.00021	148	18
1304 304 686	K20.00021	155	1
1304 304 686	K20.00021	155	2
1304 304 686	K20.00021	162	18
1304 304 686	K20.00021	169	2
1304 304 686	K20.00021	176	18
1304 304 686	K20.00021	185	1
1304 304 686	K20.00021	185	2
1304 304 686	K20.00021	192	18
1304 304 686	K20.00021	201	2
1304 304 687	K20.00705	4	38
1304 304 688	K20.00253	92	46
1304 304 688	K20.00253	103	5
1304 304 688	K20.00253	103	6
1304 304 688	K20.00253	103	7
1304 304 688	K20.00253	105	15
1304 304 688	K20.00253	106	15
1304 304 695	K20.00250	105	20
1304 304 696	K20.00305	52	42
1304 304 697	K20.00254	92	56
1304 304 697	K20.00254	103	2
1304 304 697	K20.00254	104	3
1304 305 002	K20.00576	28	66
1304 305 002	K20.00576	42	71

Original parts names, oem numbers, symbols and descriptions used in this catalogue are for reference purposes only.

OEM NO	KAÇMAZ NO	PAGE	FIG
1304 305 002	K20.00576	56	65
1304 305 002	K20.00576	76	72
1304 305 002	K20.00576	96	86
1304 305 027	K20.00579	56	67
1304 305 027	K20.00579	96	88
1304 305 028	K20.00577	56	67
1304 305 028	K20.00577	96	88
1304 305 030	K20.00576	28	66
1304 305 030	K20.00576	42	71
1304 305 030	K20.00576	56	65
1304 305 030	K20.00576	76	72
1304 305 030	K20.00576	96	86
1304 305 031	K20.00579	56	67
1304 305 031	K20.00579	96	88
1304 305 033	K20.00578	56	67
1304 305 033	K20.00578	96	88
1304 305 036	K20.00577	56	67
1304 305 036	K20.00577	96	88
1304 305 037	K20.00579	56	67
1304 305 037	K20.00579	96	88
1304 305 039	K20.00577	96	88
1304 305 040	K20.00578	56	67
1304 305 040	K20.00578	96	88
1304 305 041	K20.00577	56	67
1304 305 041	K20.00577	96	88
1304 305 043	K20.00577	28	64
1304 305 043	K20.00577	56	67
1304 305 044	K20.00579	56	67
1304 305 044	K20.00579	96	88
1304 305 045	K20.00578	56	67
1304 305 045	K20.00578	96	88
1304 306 009		24	40
1304 306 009		52	35
1304 306 009		92	61
1304 306 010		52	21
1304 306 010		92	48
1304 306 011		26	48
1304 306 011		94	74
1304 306 022		52	36
1304 306 022		92	62
1304 306 043		24	40
1304 306 051		52	38
1304 306 053		52	38
1304 306 054		92	49
1304 306 054		94	75
1304 306 055		92	64
1304 306 077		54	50
1304 306 078		52	22
1304 306 078		54	51
1304 306 079		52	22
1304 306 079		54	50
1304 306 089		52	37
1304 306 089		74	45
1304 306 089		92	63
1304 306 090		52	40
1304 306 090		74	48
1304 306 090		92	66
1304 306 096		50	21
1304 306 102		24	28
1304 306 103		24	28
1304 306 106		24	28
1304 306 107	K20.02131	24	27
1304 306 107	K20.02131	74	31
1304 306 112		24	41
1304 306 115		24	29
1304 306 136		24	29
1304 306 137		24	41
1304 306 140		52	39
1304 306 140		92	65
1304 307 176		36	2
1304 307 176		64	2
1304 307 176		104	2
1304 307 177		36	7
1304 307 177		64	7
1304 307 177		104	7
1304 307 196		36	12
1304 307 196		64	12
1304 307 196		104	12
1304 307 277		64	12
1304 307 277		104	12
1304 307 338		36	6
1304 307 338		64	6
1304 307 338		104	6
1304 307 437		36	2
1304 307 437		64	2
1304 307 437		104	2
1304 312 003		90	23
1304 312 005		90	24
1304 313 057	K20.01067	282	57
1304 313 057	K20.01067	306	57
1304 313 057	K20.01067	340	58
1304 313 058	K20.02076	282	53
1304 313 058	K20.02076	306	53
1304 313 058	K20.02076	340	54
1304 313 063		282	56
1304 313 063		306	56
1304 313 063		340	57
1304 313 133	K20.01947	34	64
1304 332 019	K20.00321	30	5
1304 332 019	K20.00321	58	4
1304 332 019	K20.00321	98	5
1304 332 043	K20.00590	100	52
1304 332 060	K20.00586	60	55
1304 332 060	K20.00586	102	55
1304 332 065	K20.00264	32	55
1304 332 065	K20.00264	62	60
1304 332 065	K20.00264	102	60
1304 332 066	K20.00265	32	53
1304 332 066	K20.00265	60	58
1304 332 066	K20.00265	102	58
1304 332 071	K20.01945	32	50
1304 332 075	K20.00266	34	63
1304 332 075	K20.00266	62	61
1304 332 075	K20.00266	102	61
1304 332 089	K20.00264	32	55
1304 332 089	K20.00264	62	60
1304 332 089	K20.00264	102	60
1304 332 111	K20.00321	30	5
1304 332 111	K20.00321	58	4
1304 332 111	K20.00321	60	47
1304 332 111	K20.00321	98	5
1304 332 111	K20.00321	100	46
1304 332 122		30	10
1304 332 134	K20.00589	98	10
1304 332 147		32	44
1304 332 178	K20.00582	58	11
1304 332 178	K20.00582	100	52
1304 332 210	K20.01944	30	13
1304 332 215	K20.00583	58	14
1304 332 216	K20.00591	98	13
1304 332 217	K20.00592	102	55
1304 333 005	K20.00268	32	52
1304 333 005	K20.00268	60	57
1304 333 005	K20.00268	102	57
1304 333 011	K20.00267	30	23
1304 333 011	K20.00267	58	23
1304 333 011	K20.00267	78	24
1304 333 011	K20.00267	98	22
1304 333 012	K20.01612	30	3
1304 333 012	K20.01612	58	10
1304 333 021	K20.00268	32	52
1304 333 021	K20.00268	60	57
1304 333 021	K20.00268	102	57
1304 334 009		62	63
1304 334 009		102	63
1304 334 014		34	59
1304 334 014		62	65

Original parts names, oem numbers, symbols and descriptions used in this catalogue are for reference purposes only.

OEM NO	KAÇMAZ NO	PAGE	FIG
1304 334 014		102	65
1304 334 037		34	62
1304 334 037		62	68
1304 334 037		102	68
1304 334 038		44	36
1304 334 038		90	31
1304 334 039	K20.00888	32	56
1304 334 039	K20.00888	62	62
1304 334 039	K20.00888	102	62
1304 334 052		34	57
1304 334 061		34	62
1304 334 061		62	68
1304 334 061		102	68
1304 334 063		30	25
1304 334 063		58	28
1304 334 063		78	27
1304 334 063		98	27
1304 334 072		34	59
1304 334 072		62	65
1304 334 072		102	65
1304 334 073	K20.00888	32	33
1304 334 073	K20.00888	60	36
1304 334 073	K20.00888	62	62
1304 334 073	K20.00888	78	35
1304 334 073	K20.00888	100	35
1304 334 073	K20.00888	102	62
1304 334 075		58	29
1304 334 075		100	28
1304 334 077		30	26
1304 334 079	K20.00888	32	33
1304 334 079	K20.00888	60	36
1304 334 079	K20.00888	78	35
1304 334 079	K20.00888	100	35
1304 338 019		32	45
1304 338 020		32	43
1304 338 020		62	73
1304 338 020		102	73
1304 338 037		34	68
1304 338 045	K20.01626	34	69
1304 338 045	K20.01626	80	47
1304 338 069		34	68
1304 338 072	K20.01620	32	47
1304 338 072	K20.01620	60	45
1304 338 072	K20.01620	100	44
1304 338 097	K20.00340	32	45
1304 338 097	K20.00340	60	44
1304 338 097	K20.00340	100	43
1304 338 109	K20.00585	60	44
1304 338 109	K20.00585	100	43
1304 343 051		32	45
1304 343 053		32	45
1306 302 026		48	1
1306 306 032	K20.00743	40	30
1306 306 050	K20.00743	40	30
1307 203 010	K20.01145	38	11
1307 203 019	K20.01145	38	11
1307 304 076	K20.00739	47	7
1307 304 076	K20.00739	47	6
1307 304 076	K20.00739	48	6
1307 304 156	K20.00738	40	17
1307 304 156	K20.00738	47	4
1307 304 156	K20.00738	47	5
1307 304 156	K20.00738	48	4
1307 304 166	K20.00753	40	39
1307 304 168	K20.00736	38	15
1307 304 607	K20.00736	38	15
1307 304 607	K20.00736	47	3
1307 304 608	K20.00753	40	39
1307 304 608	K20.00753	47	3
1308 201 068		42	74
1308 201 098		38	3
1308 201 105		38	3
1308 201 108		38	3
1308 201 110		42	74
1308 202 037	K20.00733	38	7
1308 202 038	K20.00839	38	7
1308 202 048	K20.00732	38	7
1308 202 050	K20.00730	38	7
1308 202 051	K20.00733	38	7
1308 202 052	K20.00839	38	7
1308 202 054		38	7
1308 202 057		38	7
1308 202 063		38	7
1308 202 064	K20.00731	38	7
1308 206 042		40	41
1308 206 043		42	52
1308 206 048		40	20
1308 206 054	K20.00742	40	20
1308 206 055	K20.00746	40	26
1308 206 060	K20.00765	42	52
1308 206 061	K20.00757	40	41
1308 232 006	K20.00787	44	37
1308 232 007	K20.00776	44	7
1308 232 009	K20.00775	44	2
1308 232 010	K20.00787	44	37
1308 232 011	K20.00775	44	2
1308 232 011	K20.00775	44	3
1308 233 003	K20.00780	44	16
1308 298 001	K20.01040	48	
1308 298 008	K20.01879	47	
1308 298 010	K20.01881	47	
1308 301 026		48	3
1308 301 116		46	45
1308 301 120		46	45
1308 301 175		42	60
1308 301 234		44	38
1308 302 029		38	5
1308 302 034	K20.00732	38	7
1308 302 041	K20.00726	38	1
1308 302 044	K20.00728	38	1
1308 302 050		38	1
1308 302 052		38	1
1308 302 053	K20.00729	38	1
1308 302 057		38	1
1308 302 083		38	1
1308 302 084	K20.00727	38	1
1308 302 094	K20.00730	38	7
1308 302 107	K20.01730	38	8
1308 302 114	K20.00731	38	7
1308 302 122		38	1
1308 302 124		38	5
1308 303 020	K20.00769	42	65
1308 303 021	K20.00772	42	67
1308 303 022	K20.00773	42	68
1308 303 023	K20.00768	42	65
1308 303 024	K20.00771	42	66
1308 303 027	K20.00770	42	66
1308 304 051	K20.00761	42	50
1308 304 052	K20.00766	42	56
1308 304 053	K20.00759	40	47
1308 304 054	K20.00750	40	35
1308 304 057	K20.00758	40	45
1308 304 059	K20.00767	44	1
1308 304 063	K20.00748	40	32
1308 304 064	K20.00747	40	32
1308 304 070	K20.00752	40	38
1308 304 072	K20.00735	38	14
1308 304 074	K20.00754	40	40
1308 304 074	K20.00754	47	7
1308 304 074	K20.00754	47	6
1308 304 074	K20.00754	48	9
1308 304 076	K20.00739	40	19
1308 304 077	K20.00751	40	37
1308 304 077	K20.00751	47	1
1308 304 077	K20.00751	48	7
1308 304 078	K20.00734	38	13
1308 304 078	K20.00734	47	1

Original parts names, oem numbers, symbols and descriptions used in this catalogue are for reference purposes only.

OEM NO	KAÇMAZ NO	PAGE	FIG
1308 304 078	K20.00734	48	1
1308 304 086	K20.00760	42	49
1308 304 087	K20.00762	42	51
1308 304 090	K20.00739	40	19
1308 304 090	K20.00739	47	7
1308 304 090	K20.00739	47	6
1308 304 090	K20.00739	48	6
1308 304 091	K20.00754	40	40
1308 304 091	K20.00754	47	7
1308 304 091	K20.00754	47	6
1308 304 091	K20.00754	48	9
1308 304 094	K20.00752	40	38
1308 304 094	K20.00752	47	2
1308 304 094	K20.00752	48	8
1308 304 095	K20.00735	38	14
1308 304 095	K20.00735	47	2
1308 304 095	K20.00735	48	2
1308 304 096	K20.00752	40	38
1308 304 096	K20.00752	47	2
1308 304 096	K20.00752	48	8
1308 304 097	K20.00735	38	14
1308 304 097	K20.00735	47	2
1308 304 097	K20.00735	48	2
1308 304 110	K20.00753	40	39
1308 304 110	K20.00753	47	3
1308 304 111	K20.00736	38	15
1308 304 111	K20.00736	47	3
1308 305 001	K20.00774	42	73
1308 306 024		40	43
1308 306 032		40	24
1308 306 032		40	28
1308 306 035	K20.00764	42	53
1308 306 037	K20.00756	40	42
1308 306 038	K20.00741	40	21
1308 306 050		40	25
1308 306 051		40	44
1308 306 057		42	54
1308 306 063	K20.00744	40	27
1308 306 067	K20.00764	42	53
1308 306 070	K20.00740	40	25
1308 306 071	K20.00763	42	54
1308 306 072	K20.00755	40	44
1308 306 081	K20.00741	40	21
1308 306 082	K20.00745	40	29
1308 306 121	K20.00744	40	27
1308 307 032		48	7
1308 308 008		46	43
1308 308 009		46	44
1308 332 004	K20.00777	44	4
1308 332 015	K20.00784	44	22
1308 332 026	K20.00778	44	11
1308 332 034	K20.00779	44	14
1308 332 036	K20.00782	44	18
1308 334 001	K20.00785	44	24
1308 334 009		44	31
1308 334 011		44	30
1308 334 014	K20.00786	44	25
1308 338 013	K20.00789	46	49
1308 338 014		46	49
1308 338 016		46	49
1308 338 017		46	49
1308 338 024		46	49
1308 338 025	K20.00788	46	49
1308 338 026		46	49
1310 201 012		18	65
1310 201 044	K20.00938	14	6
1310 201 045	K20.00938	14	6
1310 202 001		14	8
1310 204 016	K20.01874	19	
1310 204 018		18	69
1310 206 077		16	52
1310 206 078		16	45
1310 206 079		16	35
1310 206 081		14	22
1310 206 082		16	52
1310 206 083		16	45
1310 206 084		16	35
1310 206 085		14	22
1310 301 057		18	67
1310 301 059		18	64
1310 302 045	K20.10003	14	11
1310 302 045	K20.10003	19	1
1310 302 075		14	1
1310 302 088	K20.01913	14	10
1310 302 089	K20.00947	14	10
1310 302 092	K20.00956	14	10
1310 302 102		14	5
1310 303 053	K20.01820	18	59
1310 303 068	K20.01816	18	55
1310 303 069	K20.00958	18	55
1310 303 073	K20.01815	18	58
1310 303 074	K20.00954	18	56
1310 303 075	K20.00953	18	57
1310 303 078	K20.01919	18	58
1310 303 079	K20.01917	18	56
1310 303 083	K20.01918	18	57
1310 304 137	K20.01817	14	24
1310 304 138	K20.00942	16	24
1310 304 158	K20.00943	14	16
1310 304 158	K20.00943	19	2
1310 304 158	K20.00943	19	3
1310 304 160	K20.10003	14	11
1310 304 160	K20.10003	19	1
1310 304 161	K20.00952	14	23
1310 304 161	K20.00952	19	7
1310 304 161	K20.00952	19	6
1310 304 162		18	75
1310 304 174	K20.00098	134	46
1310 304 174	K20.00098	141	4
1310 304 174	K20.00098	141	5
1310 304 174	K20.00098	141	6
1310 304 174	K20.00098	162	46
1310 304 174	K20.00098	169	4
1310 304 174	K20.00098	169	5
1310 304 174	K20.00098	169	6
1310 304 174	K20.00098	192	46
1310 304 174	K20.00098	201	4
1310 304 174	K20.00098	201	5
1310 304 174	K20.00098	201	6
1310 304 174	K20.00098	208	16
1310 304 174	K20.00098	210	16
1310 304 174	K20.00098	217	4
1310 304 174	K20.00098	217	5
1310 304 174	K20.00098	217	6
1310 304 174	K20.00098	224	16
1310 304 174	K20.00098	226	16
1310 304 174	K20.00098	235	4
1310 304 174	K20.00098	235	5
1310 304 174	K20.00098	235	6
1310 304 174	K20.00098	240	17
1310 304 174	K20.00098	249	5
1310 304 174	K20.00098	256	45
1310 304 174	K20.00098	274	34
1310 304 174	K20.00098	289	13
1310 304 174	K20.00098	290	13
1310 304 174	K20.00098	291	13
1310 304 174	K20.00098	292	13
1310 304 174	K20.00098	298	34
1310 304 174	K20.00098	307	5
1310 304 174	K20.00098	314	45
1310 304 174	K20.00098	332	34
1310 304 174	K20.00098	347	13
1310 304 174	K20.00098	348	13
1310 304 174	K20.00098	349	13
1310 304 174	K20.00098	354	34
1310 304 175	K20.00147	10	48
1310 304 175	K20.00147	212	67

Original parts names, oem numbers, symbols and descriptions used in this catalogue are for reference purposes only.

OEM NO	KAÇMAZ NO	PAGE	FIG
1310 304 175	K20.00147	219	9
1310 304 175	K20.00147	226	64
1310 304 175	K20.00147	236	9
1310 304 175	K20.00147	244	67
1310 304 175	K20.00147	250	9
1310 304 175	K20.00147	260	68
1310 304 175	K20.00147	268	9
1310 304 175	K20.00147	300	64
1310 304 175	K20.00147	308	9
1310 304 175	K20.00147	316	68
1310 304 175	K20.00147	326	9
1310 304 175	K20.00147	365	9
1310 304 175	K20.00147	374	76
1310 304 177	K20.01818	16	29
1310 304 178	K20.00941	16	29
1310 304 182	K20.00955	16	47
1310 304 185	K20.01914	16	36
1310 304 186	K20.01915	16	36
1310 304 187	K20.00950	16	48
1310 304 188	K20.00950	16	48
1310 304 189	K20.00946	16	38
1310 304 193		18	74
1310 304 195	K20.00951	14	20
1310 304 195	K20.00951	19	5
1310 304 195	K20.00951	19	6
1310 304 196	K20.01916	16	39
1310 304 201	K20.00957	16	51
1310 304 202	K20.00098	134	46
1310 304 202	K20.00098	141	4
1310 304 202	K20.00098	141	5
1310 304 202	K20.00098	141	6
1310 304 202	K20.00098	162	46
1310 304 202	K20.00098	169	4
1310 304 202	K20.00098	169	5
1310 304 202	K20.00098	169	6
1310 304 202	K20.00098	192	46
1310 304 202	K20.00098	201	4
1310 304 202	K20.00098	201	5
1310 304 202	K20.00098	201	6
1310 304 202	K20.00098	208	16
1310 304 202	K20.00098	210	16
1310 304 202	K20.00098	217	4
1310 304 202	K20.00098	217	5
1310 304 202	K20.00098	217	6
1310 304 202	K20.00098	224	16
1310 304 202	K20.00098	226	16
1310 304 202	K20.00098	235	4
1310 304 202	K20.00098	235	5
1310 304 202	K20.00098	235	6
1310 304 202	K20.00098	240	17
1310 304 202	K20.00098	249	5
1310 304 202	K20.00098	256	45
1310 304 202	K20.00098	267	5
1310 304 202	K20.00098	267	6
1310 304 202	K20.00098	267	4
1310 304 202	K20.00098	274	34
1310 304 202	K20.00098	283	5
1310 304 202	K20.00098	289	13
1310 304 202	K20.00098	290	13
1310 304 202	K20.00098	291	13
1310 304 202	K20.00098	292	13
1310 304 202	K20.00098	298	34
1310 304 202	K20.00098	307	5
1310 304 202	K20.00098	314	45
1310 304 202	K20.00098	325	4
1310 304 202	K20.00098	325	5
1310 304 202	K20.00098	325	6
1310 304 202	K20.00098	332	34
1310 304 202	K20.00098	341	5
1310 304 202	K20.00098	347	13
1310 304 202	K20.00098	348	13
1310 304 202	K20.00098	349	13
1310 304 202	K20.00098	354	34
1310 304 202	K20.00098	363	4
1310 304 202	K20.00098	363	5
1310 304 202	K20.00098	363	6
1310 304 232	K20.00937	16	30
1310 304 232	K20.00937	19	1
1310 304 232	K20.00937	20	1
1310 305 001		18	63
1310 305 011	K20.01920	18	62
1310 306 051		16	34
1310 306 052		16	44
1310 343 027		18	70
1311 304 015	K20.00837	24	35
1311 304 015	K20.00837	35	1
1311 304 103	K20.01785	74	30
1311 304 103	K20.01785	81	7
1311 304 103	K20.01785	81	6
1311 304 103	K20.01785	82	11
1311 304 103	K20.01785	83	11
1311 304 255	K20.00916	24	21
1311 304 255	K20.00916	35	2
1311 304 255	K20.00916	35	1
1311 304 255	K20.00916	74	25
1311 304 255	K20.00916	81	3
1311 304 255	K20.00916	82	7
1311 304 255	K20.00916	83	7
1312 202 002	K20.00535	224	30
1312 202 026	K20.00116	224	30
1312 202 026	K20.00116	242	31
1312 202 027	K20.00540	242	31
1312 202 028	K20.00117	224	30
1312 202 029	K20.00534	224	30
1312 202 030	K20.00533	224	30
1312 202 031	K20.00536	224	38
1312 202 031	K20.00536	242	39
1312 202 032	K20.00539	242	31
1312 202 035	K20.00539	242	31
1312 202 036	K20.00533	224	30
1312 202 037	K20.00116	224	30
1312 202 037	K20.00116	242	31
1312 202 038	K20.00534	224	30
1312 202 039	K20.00117	224	30
1312 202 040	K20.00540	242	31
1312 202 041	K20.00536	224	38
1312 202 041	K20.00536	242	39
1312 204 028	K20.00525	217	
1312 204 028	K20.00525	235	
1312 204 028	K20.00525	267	
1312 204 028	K20.00525	325	
1312 204 028	K20.00525	363	
1312 204 031	K20.00523	217	
1312 204 031	K20.00523	235	
1312 204 031	K20.00523	249	
1312 204 031	K20.00523	267	
1312 204 031	K20.00523	283	
1312 204 031	K20.00523	307	
1312 204 031	K20.00523	325	
1312 204 031	K20.00523	341	
1312 204 031	K20.00523	363	
1312 206 011		226	65
1312 206 013		228	65
1312 206 017		228	65
1312 206 021		228	65
1312 206 022		228	65
1312 206 025		226	52
1312 206 026		226	52
1312 206 027		228	73
1312 206 028		228	73
1312 206 028		244	76
1312 206 033		228	73
1312 206 033		244	76
1312 206 034		244	68
1312 206 036		244	52
1312 206 040		244	68
1312 206 043		226	65

Original parts names, oem numbers, symbols and descriptions used in this catalogue are for reference purposes only.

OEM NO	KAÇMAZ NO	PAGE	FIG
1312 206 045		226	52
1312 206 046		244	52
1312 221 003	K20.00535	224	30
1312 232 013	K20.00619	198	1
1312 232 014	K20.00119	198	2
1312 232 014	K20.00119	232	2
1312 232 014	K20.00119	248	4
1312 232 014	K20.00119	322	5
1312 232 015	K20.00629	232	1
1312 232 015	K20.00629	322	1
1312 232 016	K20.00628	232	1
1312 232 017	K20.00633	248	3
1312 232 025	K20.00633	248	3
1312 234 002		124	19
1312 234 002		138	19
1312 234 002		154	19
1312 234 002		168	19
1312 234 002		182	19
1312 234 002		198	19
1312 234 002		232	19
1312 298 911	K20.00482	219	
1312 298 911	K20.00482	236	
1312 298 911	K20.00482	250	
1312 298 911	K20.00482	268	
1312 298 911	K20.00482	308	
1312 298 911	K20.00482	326	
1312 298 911	K20.00482	365	
1312 301 006		222	6b
1312 301 006		240	7
1312 301 007		222	6b
1312 301 007		240	7
1312 301 009		222	6a
1312 301 020		222	6b
1312 301 020		240	7
1312 301 021		222	6b
1312 301 021		240	7
1312 301 026		240	7
1312 301 033		222	6a
1312 301 034		222	6a
1312 301 037		248	33
1312 301 053		244	78
1312 301 055		222	6b
1312 301 059		228	76
1312 301 064		228	76
1312 301 066		228	76
1312 301 073		228	76
1312 301 075		228	76
1312 301 080		228	76
1312 301 082		244	78

OEM NO	KAÇMAZ NO	PAGE	FIG
1312 302 036		206	1
1312 302 036		222	1
1312 302 036		240	2
1312 302 044		222	1
1312 302 047		206	1
1312 302 047		222	1
1312 302 052		206	1
1312 302 054		206	1
1312 302 057	K20.00098	134	46
1312 302 057	K20.00098	141	4
1312 302 057	K20.00098	141	5
1312 302 057	K20.00098	141	6
1312 302 057	K20.00098	162	46
1312 302 057	K20.00098	169	4
1312 302 057	K20.00098	169	5
1312 302 057	K20.00098	169	6
1312 302 057	K20.00098	192	46
1312 302 057	K20.00098	201	4
1312 302 057	K20.00098	201	5
1312 302 057	K20.00098	201	6
1312 302 057	K20.00098	208	16
1312 302 057	K20.00098	210	16
1312 302 057	K20.00098	217	4
1312 302 057	K20.00098	217	5
1312 302 057	K20.00098	217	6
1312 302 057	K20.00098	224	16
1312 302 057	K20.00098	226	16
1312 302 057	K20.00098	235	4
1312 302 057	K20.00098	235	5
1312 302 057	K20.00098	235	6
1312 302 057	K20.00098	240	17
1312 302 057	K20.00098	249	5
1312 302 057	K20.00098	256	45
1312 302 057	K20.00098	267	5
1312 302 057	K20.00098	267	6
1312 302 057	K20.00098	267	4
1312 302 057	K20.00098	274	34
1312 302 057	K20.00098	283	5
1312 302 057	K20.00098	298	34
1312 302 057	K20.00098	307	5
1312 302 057	K20.00098	314	45
1312 302 057	K20.00098	325	4
1312 302 057	K20.00098	325	5
1312 302 057	K20.00098	325	6
1312 302 057	K20.00098	332	34
1312 302 057	K20.00098	341	5
1312 302 057	K20.00098	354	34
1312 302 057	K20.00098	363	5
1312 302 057	K20.00098	363	4

OEM NO	KAÇMAZ NO	PAGE	FIG
1312 302 057	K20.00098	363	5
1312 302 057	K20.00098	363	6
1312 302 064		240	1
1312 302 073	K20.00121	222	13
1312 302 073	K20.00121	240	14
1312 302 074	K20.00122	222	13
1312 302 077	K20.00120	222	13
1312 302 081		206	1
1312 302 096		206	1
1312 302 096		222	1
1312 303 003	K20.00123	228	79
1312 303 005	K20.00125	228	79
1312 303 005	K20.00125	246	81
1312 303 006	K20.00124	228	79
1312 303 006	K20.00124	246	81
1312 303 008	K20.00443	230	82
1312 303 008	K20.00443	246	84
1312 303 009	K20.00442	230	82
1312 303 009	K20.00442	246	84
1312 303 014	K20.00126	228	80
1312 303 016	K20.00128	228	80
1312 303 016	K20.00128	246	82
1312 303 017	K20.00127	228	80
1312 303 017	K20.00127	246	82
1312 303 020	K20.00130	230	81
1312 303 020	K20.00130	246	83
1312 303 021	K20.00131	230	81
1312 303 021	K20.00131	246	83
1312 303 036	K20.00129	230	81
1312 303 037	K20.00441	230	82
1312 304 008	K20.00135	228	66
1312 304 011	K20.00437	228	70
1312 304 027	K20.00101	208	14
1312 304 027	K20.00101	210	14
1312 304 027	K20.00101	217	1
1312 304 027	K20.00101	222	14
1312 304 027	K20.00101	226	14
1312 304 027	K20.00101	235	1
1312 304 027	K20.00101	240	15
1312 304 027	K20.00101	249	1
1312 304 027	K20.00101	256	35
1312 304 027	K20.00101	267	1
1312 304 027	K20.00101	274	25
1312 304 027	K20.00101	283	1
1312 304 027	K20.00101	289	5
1312 304 027	K20.00101	290	5
1312 304 027	K20.00101	291	5
1312 304 027	K20.00101	292	5
1312 304 027	K20.00101	296	25

Original parts names, oem numbers, symbols and descriptions used in this catalogue are for reference purposes only.

OEM NO	KAÇMAZ NO	PAGE	FIG
1312 304 027	K20.00101	307	1
1312 304 027	K20.00101	314	35
1312 304 027	K20.00101	325	1
1312 304 027	K20.00101	332	25
1312 304 027	K20.00101	341	1
1312 304 027	K20.00101	347	5
1312 304 027	K20.00101	348	5
1312 304 027	K20.00101	349	5
1312 304 027	K20.00101	352	25
1312 304 027	K20.00101	363	1
1312 304 029	K20.00132	226	46
1312 304 031	K20.00134	226	46
1312 304 031	K20.00134	244	47
1312 304 032	K20.00133	226	46
1312 304 032	K20.00133	242	47
1312 304 037	K20.00435	228	69
1312 304 052	K20.00181	16	32
1312 304 052	K20.00181	19	2
1312 304 052	K20.00181	19	3
1312 304 052	K20.00181	210	50b
1312 304 052	K20.00181	217	1
1312 304 052	K20.00181	217	3
1312 304 052	K20.00181	226	49b
1312 304 052	K20.00181	235	1
1312 304 052	K20.00181	235	3
1312 304 052	K20.00181	258	55
1312 304 052	K20.00181	267	3
1312 304 052	K20.00181	267	1
1312 304 052	K20.00181	316	55
1312 304 052	K20.00181	325	1
1312 304 052	K20.00181	325	3
1312 304 052	K20.00181	363	1
1312 304 052	K20.00181	363	3
1312 304 056	K20.00097	208	29
1312 304 056	K20.00097	217	6
1312 304 056	K20.00097	224	29
1312 304 056	K20.00097	235	6
1312 304 056	K20.00097	242	30
1312 304 056	K20.00097	249	6
1312 304 056	K20.00097	256	46
1312 304 056	K20.00097	267	6
1312 304 056	K20.00097	314	46
1312 304 056	K20.00097	325	6
1312 304 056	K20.00097	363	6
1312 304 057	K20.00098	289	13
1312 304 057	K20.00098	290	13
1312 304 057	K20.00098	291	13
1312 304 057	K20.00098	292	13
1312 304 057	K20.00098	347	13
1312 304 057	K20.00098	348	13
1312 304 057	K20.00098	349	13
1312 304 075	K20.00137	226	53
1312 304 077	K20.00432	228	68
1312 304 078	K20.00438	228	72
1312 304 080	K20.00566	226	51
1312 304 082	K20.00422	228	70
1312 304 082	K20.00422	244	73
1312 304 082	K20.00422	300	70
1312 304 082	K20.00422	318	79
1312 304 082	K20.00422	334	63
1312 304 082	K20.00422	345	28
1312 304 082	K20.00422	346	28
1312 304 082	K20.00422	356	63
1312 304 082	K20.00422	374	82
1312 304 082	K20.00422	382	28
1312 304 083	K20.00436	228	69
1312 304 083	K20.00436	244	72
1312 304 084	K20.00389	228	66
1312 304 084	K20.00389	244	69
1312 304 084	K20.00389	300	66
1312 304 084	K20.00389	318	75
1312 304 084	K20.00389	334	59
1312 304 084	K20.00389	345	24
1312 304 084	K20.00389	346	24
1312 304 084	K20.00389	356	59
1312 304 084	K20.00389	374	78
1312 304 084	K20.00389	382	24
1312 304 085	K20.00434	228	68
1312 304 085	K20.00434	244	71
1312 304 086	K20.00433	228	68
1312 304 086	K20.00433	244	71
1312 304 087	K20.00439	228	72
1312 304 087	K20.00439	244	75
1312 304 088	K20.00440	228	72
1312 304 088	K20.00440	244	75
1312 304 091	K20.00456	356	51
1312 304 092	K20.01507	356	52
1312 304 106	K20.00143	10	42
1312 304 106	K20.00143	210	61
1312 304 106	K20.00143	219	1
1312 304 106	K20.00143	226	58
1312 304 106	K20.00143	236	1
1312 304 106	K20.00143	244	61
1312 304 106	K20.00143	250	1
1312 304 106	K20.00143	258	62
1312 304 106	K20.00143	268	1
1312 304 106	K20.00143	300	58
1312 304 106	K20.00143	308	1
1312 304 106	K20.00143	316	62
1312 304 106	K20.00143	326	1
1312 304 106	K20.00143	365	1
1312 304 106	K20.00143	374	70
1312 304 124	K20.00421	300	69
1312 304 124	K20.00421	318	78
1312 304 124	K20.00421	345	27
1312 304 124	K20.00421	346	27
1312 304 124	K20.00421	374	81
1312 304 124	K20.00421	382	27
1312 304 133	K20.00184	244	55
1312 304 134	K20.00431	226	55
1312 304 136	K20.00139	226	53
1312 304 136	K20.00139	244	53
1312 304 137	K20.00138	226	53
1312 304 137	K20.00138	244	53
1312 304 139	K20.00142	226	57
1312 304 139	K20.00142	244	56
1312 304 141	K20.00141	226	57
1312 304 141	K20.00141	244	56
1312 304 142	K20.00140	226	57
1312 304 150	K20.01506	26	51
1312 304 150	K20.01506	52	45
1312 304 150	K20.01506	65	26
1312 304 150	K20.01506	66	26
1312 304 150	K20.01506	67	26
1312 304 150	K20.01506	76	53
1312 304 150	K20.01506	82	25
1312 304 150	K20.01506	83	25
1312 304 150	K20.01506	92	52
1312 304 150	K20.01506	105	19
1312 304 150	K20.01506	106	19
1312 304 150	K20.01506	258	60
1312 304 150	K20.01506	276	52
1312 304 150	K20.01506	287	18
1312 304 150	K20.01506	288	18
1312 304 150	K20.01506	300	52
1312 304 150	K20.01506	316	60
1312 304 150	K20.01506	334	52
1312 304 150	K20.01506	345	18
1312 304 150	K20.01506	346	18
1312 304 150	K20.01506	374	64
1312 304 150	K20.01506	382	18
1312 304 157	K20.00147	10	48
1312 304 157	K20.00147	212	67
1312 304 157	K20.00147	219	9
1312 304 157	K20.00147	226	64
1312 304 157	K20.00147	236	9
1312 304 157	K20.00147	244	67

Original parts names, oem numbers, symbols and descriptions used in this catalogue are for reference purposes only.

OEM NO	KAÇMAZ NO	PAGE	FIG
1312 304 157	K20.00147	250	9
1312 304 157	K20.00147	260	68
1312 304 157	K20.00147	268	9
1312 304 157	K20.00147	300	64
1312 304 157	K20.00147	308	9
1312 304 157	K20.00147	316	68
1312 304 157	K20.00147	326	9
1312 304 157	K20.00147	365	9
1312 304 157	K20.00147	374	76
1312 304 158	K20.00146	212	65
1312 304 158	K20.00146	219	5
1312 304 158	K20.00146	226	62
1312 304 158	K20.00146	236	5
1312 304 158	K20.00146	244	65
1312 304 158	K20.00146	250	5
1312 304 158	K20.00146	260	66
1312 304 158	K20.00146	268	5
1312 304 158	K20.00146	300	62
1312 304 158	K20.00146	308	5
1312 304 158	K20.00146	316	66
1312 304 158	K20.00146	326	5
1312 304 158	K20.00146	365	5
1312 304 158	K20.00146	374	74
1312 304 159	K20.00209	4	39
1312 304 159	K20.00209	10	47
1312 304 159	K20.00209	212	66
1312 304 159	K20.00209	219	6
1312 304 159	K20.00209	226	63
1312 304 159	K20.00209	236	6
1312 304 159	K20.00209	244	66
1312 304 159	K20.00209	250	6
1312 304 159	K20.00209	260	67
1312 304 159	K20.00209	268	6
1312 304 159	K20.00209	300	63
1312 304 159	K20.00209	308	6
1312 304 159	K20.00209	316	67
1312 304 159	K20.00209	326	6
1312 304 159	K20.00209	365	6
1312 304 159	K20.00209	374	75
1312 304 161	K20.00430	226	55
1312 305 003	K20.00625	230	85
1312 312 001		224	20
1312 312 002		208	20
1312 312 003		208	24
1312 312 003		224	24
1312 312 003		242	25
1312 312 008		240	21
1312 332 026	K20.00444	198	3
1312 332 026	K20.00444	232	3
1312 332 026	K20.00444	248	5
1312 332 026	K20.00444	322	2
1312 332 028	K20.01681	234	36
1312 332 028	K20.01681	248	36
1312 332 028	K20.01861	282	45
1312 332 028	K20.01681	306	45
1312 332 028	K20.01681	340	46
1312 332 028	K20.01681	362	47
1312 332 028	K20.01681	380	45
1312 332 028	K20.01681	398	38
1312 332 028	K20.01681	410	38
1312 332 033		248	34
1312 333 014	K20.00446	234	28
1313 202 013	K20.00083	208	30
1313 202 014	K20.00372	208	30
1313 202 015	K20.00563	208	30
1313 202 016	K20.00084	208	30
1313 202 018	K20.00520	208	30
1313 202 019	K20.00521	208	39
1313 204 003	K20.00526	20	
1313 204 003	K20.00526	218	
1313 204 003	K20.00526	267	
1313 204 003	K20.00526	325	
1313 204 003	K20.00526	365	
1313 204 008	K20.00528	218	
1313 204 008	K20.00528	267	
1313 204 008	K20.00528	325	
1313 204 008	K20.00528	364	
1313 204 009	K20.00529	218	
1313 204 009	K20.00529	267	
1313 204 009	K20.00529	325	
1313 204 009	K20.00529	364	
1313 206 001		212	68
1313 206 002		210	52
1313 206 004		212	68
1313 206 005		210	52
1313 206 007		212	68
1313 206 008		212	68
1313 206 010		212	76
1313 206 011		210	52
1313 206 012		212	68
1313 206 013		212	76
1313 206 014		212	76
1313 206 015		212	76
1313 206 016		212	76
1313 206 026		212	76
1313 206 031		212	68
1313 207 001	K20.00838	262	105
1313 207 001	K20.00838	278	88
1313 207 001	K20.00838	282	61
1313 207 001	K20.00838	302	96
1313 207 001	K20.00838	306	61
1313 207 001	K20.00838	320	105
1313 207 001	K20.00838	336	88
1313 207 001	K20.00838	358	88
1313 207 001	K20.00838	376	99
1313 207 003	K20.00819	262	104
1313 207 003	K20.00819	278	87
1313 207 003	K20.00819	302	95
1313 207 003	K20.00819	320	104
1313 207 003	K20.00819	336	87
1313 207 003	K20.00819	358	87
1313 207 003	K20.00819	376	98
1313 207 004	K20.00822	56	70
1313 207 004	K20.00822	96	91
1313 207 005	K20.00838	262	105
1313 207 005	K20.00838	278	88
1313 207 005	K20.00838	282	61
1313 207 005	K20.00838	302	96
1313 207 005	K20.00838	306	61
1313 207 005	K20.00838	320	105
1313 207 005	K20.00838	336	88
1313 207 005	K20.00838	358	88
1313 207 005	K20.00838	376	99
1313 221 004	K20.00085	208	30
1313 232 003	K20.00086	216	2
1313 232 003	K20.00086	264	5
1313 233 001	K20.00006	124	27
1313 233 001	K20.00006	129	7
1313 233 001	K20.00006	129	8
1313 233 001	K20.00006	138	27
1313 233 001	K20.00006	143	7
1313 233 001	K20.00006	143	8
1313 233 001	K20.00006	154	27
1313 233 001	K20.00006	157	7
1313 233 001	K20.00006	157	8
1313 233 001	K20.00006	168	27
1313 233 001	K20.00006	171	7
1313 233 001	K20.00006	171	8
1313 233 001	K20.00006	182	27
1313 233 001	K20.00006	187	7
1313 233 001	K20.00006	187	8
1313 233 001	K20.00006	198	27
1313 233 001	K20.00006	203	7
1313 233 001	K20.00006	203	8
1313 233 001	K20.00006	216	27
1313 233 001	K20.00006	219	7
1313 233 001	K20.00006	264	33

Original parts names, oem numbers, symbols and descriptions used in this catalogue are for reference purposes only.

OEM NO	KAÇMAZ NO	PAGE	FIG
1313 233 001	K20.00006	268	7
1313 233 001	K20.00006	322	26
1313 234 011		216	19
1313 238 001		266	38
1313 238 001		322	37
1313 298 909	K20.00527	20	
1313 298 909	K20.00527	219	
1313 298 909	K20.00527	268	
1313 298 909	K20.00527	326	
1313 298 909	K20.00527	365	
1313 298 911	K20.01878	20	
1313 301 008		216	30
1313 301 008		234	30
1313 301 008		248	30
1313 301 009		200	28
1313 301 009		216	30
1313 301 009		248	30
1313 301 011		216	30
1313 301 023		212	78
1313 301 024		212	78
1313 301 025		212	78
1313 301 036		130	7
1313 301 036		144	7
1313 301 036		157	7
1313 301 036		171	7
1313 301 036		187	7
1313 301 036		204	7
1313 301 036		220	7
1313 301 036		237	7
1313 301 036		251	7
1313 301 037		130	6
1313 301 037		144	6
1313 301 037		157	6
1313 301 037		171	6
1313 301 037		187	6
1313 301 037		204	6
1313 301 037		220	6
1313 301 037		237	6
1313 301 037		251	6
1313 301 038		130	2
1313 301 038		144	2
1313 301 038		157	2
1313 301 038		171	2
1313 301 038		187	2
1313 301 038		204	2
1313 301 038		220	2
1313 301 038		237	2
1313 301 038		251	2
1313 301 071		212	78
1313 301 072		212	78
1313 301 073		212	78
1313 302 014		130	3
1313 302 014		144	3
1313 302 014		157	3
1313 302 014		171	3
1313 302 014		187	3
1313 302 014		204	3
1313 302 014		220	3
1313 302 014		237	3
1313 302 014		251	3
1313 302 035	K20.00090	206	13
1313 302 036	K20.00089	206	13
1313 303 002	K20.00095	212	83
1313 303 003	K20.00093	212	82
1313 303 004	K20.00091	212	81
1313 303 010	K20.00381	212	84
1313 303 011	K20.00382	212	84
1313 304 005	K20.00099	210	47
1313 304 008	K20.00179	16	42
1313 304 008	K20.00179	20	2
1313 304 008	K20.00179	20	3
1313 304 008	K20.00179	210	59b
1313 304 008	K20.00179	218	1
1313 304 008	K20.00179	218	2
1313 304 008	K20.00179	219	3
1313 304 008	K20.00179	260	71
1313 304 008	K20.00179	267	1
1313 304 008	K20.00179	267	2
1313 304 008	K20.00179	268	3
1313 304 008	K20.00179	316	71
1313 304 008	K20.00179	325	1
1313 304 008	K20.00179	325	2
1313 304 008	K20.00179	326	3
1313 304 008	K20.00179	364	1
1313 304 008	K20.00179	365	2
1313 304 008	K20.00179	365	3
1313 304 009	K20.00182	16	40
1313 304 009	K20.00182	20	1
1313 304 009	K20.00182	20	1
1313 304 009	K20.00182	210	57b
1313 304 009	K20.00182	218	1
1313 304 009	K20.00182	219	1
1313 304 009	K20.00182	260	69
1313 304 009	K20.00182	267	1
1313 304 009	K20.00182	268	1
1313 304 009	K20.00182	316	69
1313 304 009	K20.00182	325	1
1313 304 009	K20.00182	326	1
1313 304 009	K20.00182	364	1
1313 304 009	K20.00182	365	1
1313 304 036	K20.00378	276	63
1313 304 036	K20.00378	212	73
1313 304 037	K20.00377	212	72
1313 304 038	K20.00374	212	69
1313 304 038	K20.00374	260	75
1313 304 038	K20.00374	276	59
1313 304 038	K20.00374	287	24
1313 304 038	K20.00374	288	24
1313 304 039	K20.00375	212	71
1313 304 040	K20.00376	212	71
1313 304 041	K20.00379	212	75
1313 304 042	K20.00380	212	75
1313 304 070	K20.00376	212	71
1313 304 072	K20.00373	210	55
1313 304 072	K20.00373	258	59
1313 304 077	K20.00107	210	56
1313 304 078	K20.00106	210	56
1313 304 080	K20.00104	210	53
1313 304 081	K20.00105	210	53
1313 305 001	K20.00622	214	88
1313 305 002	K20.00621	214	88
1313 306 012		130	4
1313 306 012		144	4
1313 306 012		157	4
1313 306 012		171	4
1313 306 012		187	4
1313 306 012		204	4
1313 306 012		220	4
1313 306 012		237	4
1313 306 012		251	4
1313 307 002		130	5
1313 307 002		144	5
1313 307 002		157	5
1313 307 002		171	5
1313 307 002		187	5
1313 307 002		204	5
1313 307 002		220	5
1313 307 002		237	5
1313 307 002		251	5
1313 307 003		130	5
1313 307 003		144	5
1313 307 003		157	5
1313 307 003		171	5
1313 307 003		187	5
1313 307 003		204	5
1313 307 003		220	5
1313 307 003		237	5

Original parts names, oem numbers, symbols and descriptions used in this catalogue are for reference purposes only.

OEM NO	KAÇMAZ NO	PAGE	FIG
1313 307 003		251	5
1313 307 004		130	5
1313 307 004		144	5
1313 307 004		157	5
1313 307 004		171	5
1313 307 004		187	5
1313 307 004		204	5
1313 307 004		220	5
1313 307 004		237	5
1313 307 004		251	5
1313 307 005		130	9
1313 307 005		144	9
1313 307 005		157	9
1313 307 005		171	9
1313 307 005		187	9
1313 307 005		204	9
1313 307 005		220	9
1313 307 005		237	9
1313 307 005		251	9
1313 307 006		130	10
1313 307 006		144	10
1313 307 006		157	10
1313 307 006		171	10
1313 307 006		187	10
1313 307 006		204	10
1313 307 006		220	10
1313 307 006		237	10
1313 307 006		251	10
1313 307 020		130	5
1313 307 020		144	5
1313 307 020		157	5
1313 307 020		171	5
1313 307 020		187	5
1313 307 020		204	5
1313 307 020		220	5
1313 307 020		237	5
1313 307 020		251	5
1313 307 022		130	5
1313 307 022		144	5
1313 307 022		157	5
1313 307 022		171	5
1313 307 022		187	5
1313 307 022		204	5
1313 307 022		220	5
1313 307 022		237	5
1313 307 022		251	5
1313 312 002		118	21
1313 312 002		132	21
1313 312 002		148	21
1313 312 002		162	21
1313 312 002		176	21
1313 312 002		192	21
1313 312 002		208	18
1313 312 002		224	18
1313 312 002		240	19
1313 315 001	K20.00530	216	35
1313 332 020	K20.00624	216	9
1313 332 020	K20.00624	264	24
1313 333 001	K20.00185	30	17
1313 333 001	K20.00185	58	18
1313 333 001	K20.00185	78	18
1313 333 001	K20.00185	98	17
1313 333 001	K20.00185	216	13
1313 333 001	K20.00185	220	2
1313 333 001	K20.00185	264	27
1313 333 001	K20.00185	268	2
1313 333 001	K20.00185	280	16
1313 333 001	K20.00185	284	3
1313 333 001	K20.00185	285	2
1313 333 001	K20.00185	285	3
1313 333 001	K20.00185	304	16
1313 333 001	K20.00185	308	2
1313 333 001	K20.00185	309	3
1313 333 001	K20.00185	326	2
1313 333 001	K20.00185	338	17
1313 333 001	K20.00185	342	3
1313 333 001	K20.00185	343	2
1313 333 001	K20.00185	343	3
1313 333 001	K20.00185	360	23
1313 333 001	K20.00185	365	2
1313 333 001	K20.00185	366	3
1313 333 001	K20.00185	378	17
1313 333 001	K20.00185	381	2
1313 338 002	K20.00404	216	35
1313 338 002	K20.00404	266	42
1313 338 007	K20.00531	216	35
1313 338 011	K20.00405	216	35
1314 202 039	K20.00542	260	87
1314 202 039	K20.00542	278	71
1314 202 039	K20.00542	302	78
1314 202 039	K20.00542	318	87
1314 202 039	K20.00542	336	71
1314 202 039	K20.00542	358	71
1314 202 039	K20.00542	370	5
1314 202 039	K20.00542	390	8
1314 202 039	K20.00542	402	8
1314 303 077	K20.02008	394	57
1314 303 077	K20.02008	406	58
1314 304 008	K20.01846	392	38
1314 304 008	K20.01846	392	41
1314 304 008	K20.01846	404	38
1314 304 097		392	44
1314 304 097		404	45
1314 304 119	K20.01847	392	40
1314 304 119	K20.01847	404	40
1314 304 139	K20.01861	404	44
1314 332 043		392	47
1314 332 043		404	48
1314 333 031	K20.02084	396	1
1314 333 031	K20.02084	408	1
1315 102 036	K20.00848	289	1
1315 102 040	K20.00850	291	1
1315 102 055	K20.00849	289	1
1315 102 056	K20.00846	291	1
1315 102 072	K20.01889	290	1
1315 102 073	K20.01888	290	1
1315 102 079	K20.00847	292	1
1315 103 017	K20.00864	293	1
1315 103 019	K20.00863	293	1
1315 104 026	K20.00853	288	1
1315 201 033		254	8
1315 201 033		312	8
1315 201 053	K20.00643	262	101
1315 201 053	K20.00643	278	84
1315 201 054	K20.00644	262	101
1315 201 074		262	102
1315 201 076		262	102
1315 201 178		278	85
1315 201 186		262	102
1315 201 208		278	85
1315 201 224		282	35
1315 201 224		306	35
1315 201 224		340	36
1315 202 011	K20.00149	256	37
1315 202 012	K20.00150	256	37
1315 202 014	K20.00541	254	2
1315 202 014	K20.00541	312	2
1315 202 022	K20.00149	256	37
1315 202 037	K20.00151	256	38
1315 202 037	K20.00151	274	27
1315 202 037	K20.00151	289	7
1315 202 038	K20.00640	256	38
1315 202 038	K20.00640	274	27
1315 202 038	K20.00640	290	7
1315 202 040	K20.00152	256	38
1315 202 040	K20.00152	274	27
1315 202 040	K20.00152	291	7

Original parts names, oem numbers, symbols and descriptions used in this catalogue are for reference purposes only.

OEM NO	KAÇMAZ NO	PAGE	FIG
1315 202 048	K20.00153	256	38
1315 202 048	K20.00153	274	27
1315 202 060		272	2
1315 202 060		330	2
1315 202 060		352	2
1315 202 070	K20.00668	274	27
1315 202 070	K20.00668	292	7
1315 204 006	K20.00482	219	
1315 204 006	K20.00482	236	
1315 204 006	K20.00482	250	
1315 204 006	K20.00482	268	
1315 204 006	K20.00482	308	
1315 204 006	K20.00482	326	
1315 204 006	K20.00482	365	
1315 206 062		260	73
1315 206 065		258	56
1315 206 070		260	82
1315 206 076		276	58
1315 206 079		276	48
1315 206 083		276	66
1315 207 014	K20.00813	262	103
1315 207 014	K20.00813	278	86
1315 207 014	K20.00813	302	94
1315 207 014	K20.00813	320	103
1315 207 014	K20.00813	336	86
1315 207 014	K20.00813	358	86
1315 212 011		254	11
1315 212 013	K20.00637	272	8
1315 221 002	K20.00154	256	38
1315 221 002	K20.00154	274	27
1315 231 002		200	31
1315 231 002		216	33
1315 231 002		234	33
1315 231 004		266	40
1315 231 004		282	41
1315 231 004		306	41
1315 231 004		324	39
1315 231 004		340	42
1315 231 004		362	44
1315 232 001	K20.00155	264	5
1315 232 010	K20.00156	280	2
1315 232 010	K20.00156	304	2
1315 232 016	K20.00645	280	1
1315 232 016	K20.00645	304	1
1315 232 017	K20.00645	280	1
1315 232 017	K20.01062	280	6
1315 232 017	K20.00645	304	1
1315 232 017	K20.01062	304	6
1315 232 023	K20.00623	216	1
1315 232 023	K20.00623	264	1
1315 232 027	K20.00925	280	1
1315 232 027	K20.01064	280	6
1315 232 027	K20.00925	304	1
1315 232 027	K20.01064	304	6
1315 233 006	K20.00157	264	25
1315 233 006	K20.00157	268	1
1315 233 006	K20.00157	322	24
1315 233 023	K20.00402	264	34
1315 233 029	K20.00532	220	
1315 233 029	K20.00532	268	
1315 233 029	K20.00532	285	
1315 233 029	K20.00532	308	
1315 233 029	K20.00532	326	
1315 233 029	K20.00532	343	
1315 233 029	K20.00532	365	
1315 298 001	K20.01585	269	1
1315 298 001	K20.01585	286	1
1315 298 001	K20.01585	310	1
1315 298 001	K20.01585	327	1
1315 298 001	K20.01585	344	1
1315 298 001	K20.01585	367	1
1315 298 002	K20.01039	269	
1315 298 002	K20.01039	286	
1315 298 002	K20.01039	310	
1315 298 002	K20.01039	327	
1315 298 002	K20.01039	344	
1315 298 002	K20.01039	367	
1315 298 003	K20.01044	269	
1315 298 003	K20.01044	286	
1315 298 003	K20.01044	310	
1315 298 003	K20.01044	327	
1315 298 003	K20.01044	344	
1315 298 003	K20.01044	367	
1315 298 018	K20.00383	217	
1315 298 018	K20.00383	235	
1315 298 018	K20.00383	267	
1315 298 018	K20.00383	325	
1315 298 018	K20.00383	363	
1315 298 029	K20.00545	285	
1315 298 029	K20.00545	309	
1315 298 029	K20.00545	343	
1315 298 029	K20.00545	366	
1315 298 030	K20.00524	217	
1315 298 030	K20.00524	235	
1315 298 030	K20.00524	249	
1315 298 030	K20.00524	267	
1315 298 030	K20.00524	283	
1315 298 030	K20.00524	307	
1315 298 030	K20.00524	325	
1315 298 030	K20.00524	341	
1315 298 030	K20.00524	363	
1315 298 034	K20.00546	285	
1315 298 034	K20.00546	308	
1315 298 034	K20.00546	343	
1315 298 034	K20.00546	365	
1315 298 047	K20.00544	268	
1315 298 060	K20.00087	219	
1315 298 060	K20.00087	250	
1315 298 060	K20.00087	284	
1315 298 060	K20.00087	308	
1315 298 060	K20.00087	342	
1315 298 060	K20.00087	364	
1315 298 061	K20.00088	218	
1315 298 061	K20.00088	236	
1315 298 061	K20.00088	249	
1315 298 061	K20.00088	283	
1315 298 061	K20.00088	307	
1315 298 061	K20.00088	341	
1315 298 061	K20.00088	363	
1315 298 066	K20.00893	284	
1315 298 066	K20.00893	308	
1315 298 066	K20.00893	342	
1315 298 066	K20.00893	364	
1315 298 067	K20.00894	283	
1315 298 067	K20.00894	307	
1315 298 067	K20.00894	341	
1315 298 067	K20.00894	363	
1315 301 007		269	4
1315 301 007		286	4
1315 301 007		310	4
1315 301 007		327	4
1315 301 007		344	4
1315 301 007		367	4
1315 301 083		266	37
1315 301 083		322	36
1315 301 118		264	36
1315 301 118		322	35
1315 301 220		234	33
1315 301 223		282	35
1315 301 223		306	35
1315 301 223		340	36
1315 301 223		362	41
1315 301 224		362	41
1315 301 233		269	2
1315 301 233		286	2
1315 301 233		310	2
1315 301 233		327	2

Original parts names, oem numbers, symbols and descriptions used in this catalogue are for reference purposes only.

OEM NO	KAÇMAZ NO	PAGE	FIG
1315 301 233		344	2
1315 301 233		367	2
1315 301 234		269	11
1315 301 234		286	11
1315 301 234		310	11
1315 301 234		327	11
1315 301 234		344	11
1315 301 234		367	11
1315 302 007	K20.00160	256	32
1315 302 008	K20.00159	256	32
1315 302 013		254	1
1315 302 013		312	1
1315 302 029		370	1
1315 302 040		254	25
1315 302 040		272	21
1315 302 040		296	21
1315 302 040		312	25
1315 302 040		330	21
1315 302 040		352	21
1315 302 040		370	10
1315 302 042	K20.00150	256	37
1315 302 044		254	4
1315 302 044		312	4
1315 302 045		254	4
1315 302 045		312	4
1315 302 057		254	4
1315 302 057		312	4
1315 302 072	K20.00653	272	2
1315 302 072	K20.00653	296	2
1315 302 072	K20.00653	330	2
1315 302 072	K20.00653	352	2
1315 302 075	K20.00559	254	5
1315 302 075	K20.00559	272	1
1315 302 075	K20.00559	296	1
1315 302 075	K20.00559	312	5
1315 302 075	K20.00559	330	1
1315 302 075	K20.00559	352	1
1315 302 079	K20.00188	314	38
1315 302 085	K20.00187	314	38
1315 302 086	K20.00149	256	37
1315 302 106	K20.00634	272	2
1315 302 106	K20.00634	330	2
1315 302 106	K20.00634	352	2
1315 302 113		254	4
1315 302 113		312	4
1315 302 116	K20.00568	278	70
1315 302 116	K20.00568	336	70
1315 302 116	K20.00568	358	70
1315 302 117	K20.00569	278	73
1315 302 117	K20.00569	336	73
1315 302 117	K20.00569	358	73
1315 302 120	K20.00568	260	86
1315 302 120	K20.00568	278	70
1315 302 120	K20.00568	302	77
1315 302 120	K20.00568	318	86
1315 302 120	K20.00568	336	70
1315 302 120	K20.00568	358	70
1315 302 121	K20.00569	260	89
1315 302 121	K20.00569	278	73
1315 302 121	K20.00569	302	80
1315 302 121	K20.00569	318	89
1315 302 121	K20.00569	336	73
1315 302 121	K20.00569	358	73
1315 302 122	K20.00663	272	2
1315 302 122	K20.00663	296	2
1315 302 122	K20.00663	330	2
1315 302 122	K20.00663	352	2
1315 302 134	K20.00663	272	2
1315 302 134	K20.00663	296	2
1315 302 134	K20.00663	330	2
1315 302 134	K20.00663	352	2
1315 302 136	K20.00560	254	5
1315 302 136	K20.00560	272	1
1315 302 136	K20.00560	296	1
1315 302 136	K20.00560	312	5
1315 302 136	K20.00560	330	1
1315 302 136	K20.00560	352	1
1315 302 153	K20.00151	256	38
1315 302 153	K20.00151	274	27
1315 302 153	K20.00151	289	7
1315 302 157	K20.00163	272	24
1315 302 157	K20.00163	289	4
1315 302 157	K20.00163	290	4
1315 302 157	K20.00163	291	4
1315 302 157	K20.00163	292	4
1315 302 158	K20.00162	272	24
1315 302 158	K20.00162	289	4
1315 302 158	K20.00162	290	4
1315 302 158	K20.00162	291	4
1315 302 162	K20.00152	256	38
1315 302 162	K20.00152	274	27
1315 302 162	K20.00152	291	7
1315 302 164	K20.00640	274	27
1315 302 164	K20.00640	290	7
1315 302 173	K20.00161	256	33
1315 302 194		372	29
1315 302 196	K20.01504	208	33
1315 302 196	K20.01504	224	33
1315 302 196	K20.01504	242	34
1315 302 196	K20.01504	256	42
1315 302 196	K20.01504	274	31
1315 302 196	K20.01504	289	10
1315 302 196	K20.01504	290	10
1315 302 196	K20.01504	291	10
1315 302 196	K20.01504	292	10
1315 302 196	K20.01504	298	31
1315 302 196	K20.01504	314	42
1315 302 196	K20.01504	332	31
1315 302 196	K20.01504	347	10
1315 302 196	K20.01504	348	10
1315 302 196	K20.01504	349	10
1315 302 196	K20.01504	354	31
1315 302 196	K20.01504	372	25
1315 302 196	K20.01504	383	12
1315 302 196	K20.01504	384	12
1315 302 196	K20.01504	385	12
1315 302 203	K20.00668	274	27
1315 303 004	K20.00171	262	96
1315 303 004	K20.00171	278	80
1315 303 004	K20.00171	293	6
1315 303 008	K20.00166	262	94
1315 303 008	K20.00166	278	78
1315 303 008	K20.00166	293	4
1315 303 010	K20.00170	262	96
1315 303 011	K20.00167	262	95
1315 303 012	K20.00164	262	94
1315 303 020	K20.00396	262	97
1315 303 022	K20.00398	262	97
1315 303 027	K20.00543	254	3
1315 303 027	K20.00543	260	88
1315 303 027	K20.00543	278	72
1315 303 027	K20.00543	302	79
1315 303 027	K20.00543	312	3
1315 303 027	K20.00543	318	88
1315 303 027	K20.00543	336	72
1315 303 027	K20.00543	358	72
1315 303 027	K20.00543	370	4
1315 303 027	K20.00543	390	7
1315 303 027	K20.00543	402	7
1315 303 041	K20.00397	262	97
1315 303 042	K20.00567	262	97
1315 303 046	K20.00167	262	95
1315 303 048	K20.00398	262	97
1315 303 049	K20.00396	262	97
1315 303 050	K20.00168	262	95
1315 303 050	K20.00168	278	79
1315 303 050	K20.00168	293	5

Original parts names, oem numbers, symbols and descriptions used in this catalogue are for reference purposes only.

OEM NO	KAÇMAZ NO	PAGE	FIG
1315 303 051	K20.00165	278	78
1315 303 051	K20.00165	293	4
1315 303 052	K20.00164	262	94
1315 303 060		269	13
1315 303 060		286	13
1315 303 060		310	13
1315 303 060		327	13
1315 303 060		344	13
1315 303 060		367	13
1315 303 063	K20.00463	278	81
1315 303 063	K20.00463	293	7
1315 303 064	K20.00165	278	78
1315 303 064	K20.00165	293	4
1315 304 004	K20.00391	260	77
1315 304 004	K20.00391	276	61
1315 304 004	K20.00391	287	26
1315 304 004	K20.00391	288	26
1315 304 006	K20.00395	260	81
1315 304 006	K20.00395	276	65
1315 304 006	K20.00395	287	30
1315 304 006	K20.00395	288	30
1315 304 013	K20.00394	260	81
1315 304 014	K20.00392	260	77
1315 304 017	K20.00172	258	54
1315 304 018	K20.00393	260	78
1315 304 018	K20.00393	276	62
1315 304 018	K20.00393	287	27
1315 304 018	K20.00393	288	27
1315 304 018	K20.00393	334	62
1315 304 018	K20.00393	356	62
1315 304 025	K20.00178	258	61
1315 304 025	K20.00178	276	53
1315 304 025	K20.00178	287	19
1315 304 025	K20.00178	288	19
1315 304 026	K20.00177	258	61
1315 304 027	K20.00176	258	57
1315 304 027	K20.00176	276	49
1315 304 027	K20.00176	287	15
1315 304 027	K20.00176	288	15
1315 304 028	K20.00175	258	57
1315 304 029	K20.00390	258	59
1315 304 043	K20.01764	258	52
1315 304 043	K20.01764	274	39
1315 304 043	K20.01764	298	39
1315 304 043	K20.01764	316	52
1315 304 043	K20.01764	332	39
1315 304 043	K20.01764	354	39
1315 304 043	K20.01764	374	51
1315 304 044	K20.01763	258	52
1315 304 044	K20.01763	274	39
1315 304 044	K20.01763	298	39
1315 304 044	K20.01763	316	52
1315 304 044	K20.01763	332	39
1315 304 044	K20.01763	354	39
1315 304 044	K20.01763	374	51
1315 304 045	K20.01762	258	52
1315 304 045	K20.01762	274	39
1315 304 045	K20.01762	298	39
1315 304 045	K20.01762	316	52
1315 304 045	K20.01762	332	39
1315 304 045	K20.01762	354	39
1315 304 045	K20.01762	374	51
1315 304 046	K20.01529	210	45
1315 304 046	K20.01529	226	44
1315 304 046	K20.01529	242	45
1315 304 046	K20.01529	258	52
1315 304 046	K20.01529	274	39
1315 304 046	K20.01529	298	39
1315 304 046	K20.01529	316	52
1315 304 046	K20.01529	332	39
1315 304 046	K20.01529	354	39
1315 304 046	K20.01529	374	51
1315 304 047	K20.01528	210	45
1315 304 047	K20.01528	226	44
1315 304 047	K20.01528	242	45
1315 304 047	K20.01528	258	52
1315 304 047	K20.01528	274	39
1315 304 047	K20.01528	298	39
1315 304 047	K20.01528	316	52
1315 304 047	K20.01528	332	39
1315 304 047	K20.01528	354	39
1315 304 047	K20.01528	374	51
1315 304 048	K20.01527	210	45
1315 304 048	K20.01527	226	44
1315 304 048	K20.01527	242	45
1315 304 048	K20.01527	258	52
1315 304 048	K20.01527	274	39
1315 304 048	K20.01527	287	4
1315 304 048	K20.01527	288	4
1315 304 048	K20.01527	298	39
1315 304 048	K20.01527	316	52
1315 304 048	K20.01527	332	39
1315 304 048	K20.01527	345	4
1315 304 048	K20.01527	346	4
1315 304 048	K20.01527	354	39
1315 304 048	K20.01527	374	51
1315 304 048	K20.01527	382	4
1315 304 051	K20.01781	274	39
1315 304 051	K20.01781	298	39
1315 304 051	K20.01781	332	39
1315 304 051	K20.01781	354	39
1315 304 051	K20.01781	374	51
1315 304 084	K20.00299	287	17
1315 304 084	K20.00299	288	17
1315 304 085	K20.01765	258	52
1315 304 085	K20.01765	274	39
1315 304 085	K20.01765	298	39
1315 304 085	K20.01765	316	52
1315 304 085	K20.01765	332	39
1315 304 085	K20.01765	354	39
1315 304 085	K20.01765	374	51
1315 304 086	K20.01766	258	52
1315 304 086	K20.01766	274	39
1315 304 086	K20.01766	298	39
1315 304 086	K20.01766	316	52
1315 304 086	K20.01766	332	39
1315 304 086	K20.01766	354	39
1315 304 086	K20.01766	374	51
1315 304 089	K20.00173	258	54
1315 304 089	K20.00173	276	43
1315 304 089	K20.00173	287	8
1315 304 089	K20.00173	288	8
1315 304 130	K20.00373	210	55
1315 304 130	K20.00373	258	59
1315 304 131	K20.00299	276	51
1315 304 131	K20.00299	287	17
1315 304 131	K20.00299	288	17
1315 304 132	K20.00378	212	73
1315 304 132	K20.00378	276	63
1315 304 132	K20.00378	287	28
1315 304 132	K20.00378	288	28
1315 304 132	K20.00378	260	79
1315 304 135	K20.00103	16	33
1315 304 135	K20.00103	19	5
1315 304 135	K20.00103	19	6
1315 304 135	K20.00103	20	5
1315 304 135	K20.00103	210	51
1315 304 135	K20.00103	218	6
1315 304 135	K20.00103	218	5
1315 304 135	K20.00103	226	50
1315 304 135	K20.00103	236	6
1315 304 135	K20.00103	236	5
1315 304 135	K20.00103	244	51
1315 304 135	K20.00103	249	5
1315 304 135	K20.00103	249	6
1315 304 135	K20.00103	276	47
1315 304 135	K20.00103	283	3

OEM NO	KAÇMAZ NO	PAGE	FIG
1315 304 135	K20.00103	283	6
1315 304 135	K20.00103	283	5
1315 304 135	K20.00103	288	14
1315 304 135	K20.00103	300	47
1315 304 135	K20.00103	307	6
1315 304 135	K20.00103	307	5
1315 304 135	K20.00103	307	3
1315 304 135	K20.00103	334	47
1315 304 135	K20.00103	341	5
1315 304 135	K20.00103	341	6
1315 304 135	K20.00103	341	3
1315 304 135	K20.00103	345	14
1315 304 135	K20.00103	356	47
1315 304 135	K20.00103	363	3
1315 304 135	K20.00103	363	6
1315 304 135	K20.00103	364	5
1315 304 136	K20.00114	210	60a
1315 304 136	K20.00114	219	6
1315 304 136	K20.00114	244	60
1315 304 136	K20.00114	250	6
1315 304 136	K20.00114	276	57
1315 304 136	K20.00114	284	6
1315 304 136	K20.00114	284	3
1315 304 136	K20.00114	288	23
1315 304 136	K20.00114	300	57
1315 304 136	K20.00114	308	3
1315 304 136	K20.00114	308	6
1315 304 136	K20.00114	334	57
1315 304 136	K20.00114	342	3
1315 304 136	K20.00114	342	6
1315 304 136	K20.00114	345	23
1315 304 136	K20.00114	356	57
1315 304 136	K20.00114	364	3
1315 304 136	K20.00114	364	6
1315 304 380	K20.00395	260	81
1315 304 380	K20.00395	276	65
1315 304 380	K20.00395	287	30
1315 304 380	K20.00395	288	30
1315 305 002	K20.00970	262	100
1315 305 002	K20.00970	278	83
1315 305 005	K20.00642	262	100
1315 305 011	K20.00970	262	100
1315 305 011	K20.00970	278	83
1315 306 079	K20.00812	260	74
1315 306 079	K20.00812	318	74
1315 307 012		269	6
1315 307 012		286	6
1315 307 012		310	6
1315 307 012		327	6
1315 307 012		344	6
1315 307 012		367	6
1315 307 013		269	7
1315 307 013		286	7
1315 307 013		310	7
1315 307 013		327	7
1315 307 013		344	7
1315 307 013		367	7
1315 307 013		381	5
1315 307 203	K20.02178	411	7
1315 307 218	K20.02184	411	23
1315 307 219	K20.02183	411	22
1315 307 226	K20.01082	411	13
1315 307 242		269	14
1315 307 242		286	14
1315 307 242		310	14
1315 307 242		327	14
1315 307 242		344	14
1315 307 242		367	14
1315 307 242		381	4
1315 307 264	K20.00835	411	11
1315 307 286		411	9
1315 307 287	K20.01081	411	12
1315 307 292	K20.02182	411	16
1315 307 294	K20.00808	411	10
1315 307 299		411	24
1315 307 327		411	11
1315 307 333	K20.00836	411	22
1315 307 376	K20.00799	411	11
1315 307 383		411	1
1315 307 387		411	19
1315 307 404	K20.00872	411	26
1315 312 020	K20.01772	254	17
1315 312 020	K20.01772	272	13
1315 312 020	K20.01772	296	13
1315 312 020	K20.01772	312	17
1315 312 020	K20.01772	330	13
1315 312 020	K20.01772	352	13
1315 312 034	K20.01689	254	21
1315 312 034	K20.01689	272	17
1315 312 034	K20.01689	296	17
1315 312 034	K20.01689	312	21
1315 312 034	K20.01689	330	17
1315 312 034	K20.01689	352	17
1315 312 034	K20.01689	372	44
1315 312 047	K20.01688	118	22
1315 312 047	K20.01688	134	22
1315 312 047	K20.01688	148	22
1315 312 047	K20.01688	162	22
1315 312 047	K20.01688	176	22
1315 312 047	K20.01688	192	22
1315 312 047	K20.01688	208	19
1315 312 047	K20.01688	224	19
1315 312 047	K20.01688	240	20
1315 312 047	K20.01688	254	10
1315 312 047	K20.01688	272	7
1315 312 047	K20.01688	296	7
1315 312 047	K20.01688	312	10
1315 312 047	K20.01688	330	7
1315 312 047	K20.01688	352	7
1315 312 047	K20.01688	372	38
1315 312 048	K20.00877	254	23
1315 312 048	K20.00877	272	19
1315 312 048	K20.00877	352	19
1315 312 073	K20.00636	272	9
1315 312 074	K20.00635	254	12
1315 312 074	K20.00635	272	10
1315 312 074	K20.00635	296	10
1315 312 074	K20.00635	312	12
1315 312 074	K20.00635	330	10
1315 312 074	K20.00635	352	10
1315 312 076		254	13
1315 331 001		269	9
1315 331 001		286	9
1315 331 001		310	9
1315 331 001		327	9
1315 331 001		344	9
1315 331 001		367	9
1315 332 002	K20.00651	264	24
1315 332 003	K20.00650	264	20
1315 332 041	K20.00646	280	10
1315 332 041	K20.00646	304	10
1315 332 041	K20.00646	338	11
1315 332 041	K20.00646	378	11
1315 332 053	K20.00400	280	3
1315 332 053	K20.00400	304	3
1315 332 054	K20.01592	260	85
1315 332 054	K20.01592	318	85
1315 332 073	K20.01593	278	69
1315 332 073	K20.01593	336	69
1315 332 073	K20.01593	358	69
1315 332 073	K20.01593	376	88
1315 332 091	K20.00924	280	3
1315 332 091	K20.00924	304	3
1315 333 048	K20.00427	282	43
1315 333 048	K20.00427	306	43
1315 333 048	K20.00427	340	44
1315 334 021	K20.00844	264	18

Original parts names, oem numbers, symbols and descriptions used in this catalogue are for reference purposes only.

OEM NO	KAÇMAZ NO	PAGE	FIG
1315 334 021	K20.00844	322	18
1315 334 033	K20.00652	264	10
1315 334 034	K20.01773	280	30
1315 334 034	K20.01773	304	30
1315 334 034	K20.01773	338	31
1315 334 034	K20.01773	360	32
1315 334 034	K20.01773	378	31
1315 334 039		264	11
1315 334 039		280	26
1315 334 039		304	26
1315 334 039		322	11
1315 334 039		338	27
1315 334 041	K20.02128	30	29
1315 334 041	K20.02128	60	32
1315 334 041	K20.02128	78	31
1315 334 041	K20.02128	100	31
1315 334 052	K20.00843	322	18
1315 334 056	K20.00842	282	34
1315 334 056	K20.00842	306	34
1315 334 056	K20.00842	340	35
1315 334 056	K20.00842	362	36
1315 334 058	K20.00648	280	27
1315 334 058	K20.00648	304	27
1315 334 063	K20.01773	360	32
1315 334 069	K20.00842	282	34
1315 334 069	K20.00842	306	34
1315 334 069	K20.00842	340	35
1315 334 071	K20.00648	280	27
1315 334 071	K20.00648	304	27
1315 402 072	K20.00653	272	2
1315 402 072	K20.00653	296	2
1315 402 072	K20.00653	330	2
1315 402 072	K20.00653	352	2
1315 402 075	K20.00559	254	5
1315 402 075	K20.00559	272	1
1315 402 075	K20.00559	296	1
1315 402 075	K20.00559	312	5
1315 402 075	K20.00559	330	1
1315 402 075	K20.00559	352	1
1315 402 106	K20.00634	272	2
1315 402 106	K20.00634	330	2
1315 402 106	K20.00634	352	2
1315 402 120	K20.00568	260	86
1315 402 120	K20.00568	278	70
1315 402 120	K20.00568	302	77
1315 402 120	K20.00568	318	86
1315 402 120	K20.00568	336	70
1315 402 120	K20.00568	358	70
1315 402 121	K20.00569	260	89
1315 402 121	K20.00569	278	73
1315 402 121	K20.00569	302	80
1315 402 121	K20.00569	318	89
1315 402 121	K20.00569	336	73
1315 402 121	K20.00569	358	73
1315 402 136	K20.00560	254	5
1315 402 136	K20.00560	272	1
1315 402 136	K20.00560	296	1
1315 402 136	K20.00560	312	5
1315 402 136	K20.00560	330	1
1315 402 136	K20.00560	352	1
1316 102 033	K20.00855	347	1
1316 102 034	K20.00854	347	1
1316 102 036	K20.00856	348	1
1316 102 055	K20.00859	349	1
1316 102 059	K20.00857	348	1
1316 102 061	K20.00858	349	1
1316 103 012	K20.00862	350	1
1316 103 012	K20.00862	386	1
1316 103 013	K20.00861	350	1
1316 103 013	K20.00861	386	1
1316 104 039	K20.00860	345	1
1316 201 029	K20.00657	302	91
1316 201 029	K20.00657	320	101
1316 201 029	K20.00657	336	84
1316 201 029	K20.00657	358	84
1316 201 030	K20.00662	320	101
1316 201 030	K20.00662	376	97
1316 201 109		320	102
1316 201 110		302	92
1316 201 110		336	85
1316 201 110		358	85
1316 201 111		320	102
1316 201 142		254	8
1316 201 142		272	5
1316 201 142		296	5
1316 201 142		312	8
1316 201 142		330	5
1316 201 142		352	5
1316 201 149		254	8
1316 201 149		272	5
1316 201 149		296	5
1316 201 149		312	8
1316 201 149		330	5
1316 201 149		352	5
1316 202 025	K20.00187	296	27
1316 202 025	K20.00187	314	38
1316 202 025	K20.00187	332	27
1316 202 025	K20.00187	347	7
1316 202 025	K20.00187	354	27
1316 202 026	K20.00188	298	27
1316 202 026	K20.00188	314	38
1316 202 026	K20.00188	332	27
1316 202 026	K20.00188	348	7
1316 202 026	K20.00188	354	27
1316 202 033	K20.00189	314	38
1316 202 033	K20.00189	332	27
1316 202 033	K20.00189	354	27
1316 202 037	K20.00901	354	27
1316 202 038	K20.00190	298	27
1316 202 038	K20.00190	332	27
1316 202 038	K20.00190	349	7
1316 202 038	K20.00190	354	27
1316 203 001	K20.00983	302	93
1316 204 010		372	36
1316 204 014	K20.00794	218	
1316 204 014	K20.00794	236	
1316 204 014	K20.00794	249	
1316 204 014	K20.00794	283	
1316 204 014	K20.00794	307	
1316 204 014	K20.00794	341	
1316 204 014	K20.00794	364	
1316 204 016	K20.00794	218	
1316 204 016	K20.00794	236	
1316 204 016	K20.00794	249	
1316 204 016	K20.00794	283	
1316 204 016	K20.00794	307	
1316 204 016	K20.00794	341	
1316 204 016	K20.00794	364	
1316 204 017	K20.00087	219	
1316 204 017	K20.00087	250	
1316 204 017	K20.00087	284	
1316 204 017	K20.00087	308	
1316 204 017	K20.00087	342	
1316 204 017	K20.00087	364	
1316 206 043		318	73
1316 206 047		316	56
1316 206 050		318	82
1316 206 055		300	65
1316 206 055		334	58
1316 206 055		356	58
1316 206 058		300	48
1316 206 058		334	48
1316 206 058		356	48
1316 206 061		300	73
1316 206 061		334	66
1316 206 061		356	66
1316 208 002	K20.01081	411	12

Original parts names, oem numbers, symbols and descriptions used in this catalogue are for reference purposes only.

OEM NO	KAÇMAZ NO	PAGE	FIG
1316 208 003	K20.00823	411	20
1316 212 008		312	11
1316 212 010	K20.00655	296	8
1316 212 010	K20.00655	330	8
1316 212 010	K20.00655	352	8
1316 221 015		272	5
1316 221 015		330	5
1316 221 015		352	5
1316 221 017	K20.00191	314	38
1316 221 017	K20.00191	332	27
1316 221 017	K20.00191	354	27
1316 232 005	K20.00619	198	1
1316 232 006	K20.00629	232	1
1316 232 006	K20.00629	322	1
1316 232 011	K20.00192	338	2
1316 232 011	K20.00192	378	2
1316 232 017	K20.00221	360	8
1316 232 019	K20.00658	338	1
1316 232 019	K20.01063	338	6
1316 232 021	K20.00664	360	7
1316 232 039	K20.00927	338	1
1316 232 039	K20.01065	338	6
1316 232 039	K20.00927	378	1
1316 232 039	K20.01065	378	6
1316 232 040		360	7
1316 233 010	K20.00452	322	33
1316 233 011	K20.00896	280	24
1316 233 011	K20.00896	284	7
1316 233 011	K20.00896	284	8
1316 233 011	K20.00896	304	24
1316 233 011	K20.00896	309	7
1316 233 011	K20.00896	309	8
1316 233 011	K20.00896	338	25
1316 233 011	K20.00896	342	7
1316 233 011	K20.00896	342	8
1316 233 011	K20.00896	362	37
1316 233 011	K20.00896	366	7
1316 233 011	K20.00896	366	8
1316 233 014	K20.00403	282	38
1316 233 014	K20.00403	306	38
1316 233 014	K20.00403	340	39
1316 233 014	K20.00403	362	38
1316 233 015	K20.00158	280	24
1316 233 015	K20.00158	285	7
1316 233 015	K20.00158	285	8
1316 233 015	K20.00158	304	24
1316 233 015	K20.00158	308	7
1316 233 015	K20.00158	309	8
1316 233 015	K20.00158	338	25
1316 233 015	K20.00158	343	7
1316 233 015	K20.00158	343	8
1316 233 015	K20.00158	362	37
1316 233 015	K20.00158	365	7
1316 233 015	K20.00158	366	8
1316 233 017	K20.00538	237	
1316 233 017	K20.00538	250	
1316 233 028	K20.00796	282	38
1316 233 028	K20.00796	306	38
1316 233 028	K20.00796	340	39
1316 233 028	K20.00796	362	38
1316 233 029	K20.00896	280	24
1316 233 029	K20.00896	284	7
1316 233 029	K20.00896	284	8
1316 233 029	K20.00896	304	24
1316 233 029	K20.00896	309	7
1316 233 029	K20.00896	309	8
1316 233 029	K20.00896	338	25
1316 233 029	K20.00896	342	7
1316 233 029	K20.00896	342	8
1316 233 029	K20.00896	362	37
1316 233 029	K20.00896	366	7
1316 233 029	K20.00896	366	8
1316 298 036	K20.00878	381	
1316 301 022		269	12
1316 301 022		286	12
1316 301 022		310	12
1316 301 022		327	12
1316 301 022		344	12
1316 301 022		367	12
1316 301 042		269	4
1316 301 042		286	4
1316 301 042		310	4
1316 301 042		327	4
1316 301 042		344	4
1316 301 042		367	4
1316 301 051		362	40
1316 301 064		254	8
1316 301 064		272	5
1316 301 064		296	5
1316 301 064		330	5
1316 301 064		352	5
1316 302 001	K20.00193	314	32
1316 302 002	K20.00547	314	32
1316 302 014	K20.00466	314	37
1316 302 015	K20.00465	314	37
1316 302 026	K20.00195	330	24
1316 302 026	K20.00195	352	24
1316 302 026	K20.00196	370	17
1316 302 026	K20.00195	385	6
1316 302 056	K20.00557	296	24
1316 302 057	K20.00214	296	24
1316 302 065	K20.00194	314	33
1316 302 066	K20.00196	296	24
1316 302 066	K20.00196	330	24
1316 302 066	K20.00196	347	4
1316 302 066	K20.00196	348	4
1316 302 066	K20.00196	349	4
1316 302 066	K20.00196	370	17
1316 302 066	K20.00196	383	6
1316 302 066	K20.00196	384	6
1316 302 066	K20.00196	385	6
1316 302 067	K20.00195	330	24
1316 302 067	K20.00195	347	4
1316 302 067	K20.00195	348	4
1316 302 067	K20.00195	349	4
1316 302 067	K20.00195	352	24
1316 302 067	K20.00195	370	17
1316 302 067	K20.00195	383	6
1316 302 067	K20.00195	384	6
1316 302 067	K20.00195	385	6
1316 302 079	K20.00188	298	27
1316 302 079	K20.00188	348	7
1316 302 079	K20.00188	332	27
1316 302 079	K20.00188	354	27
1316 302 085	K20.00187	296	27
1316 302 085	K20.00187	332	27
1316 302 085	K20.00187	347	7
1316 302 085	K20.00187	354	27
1316 302 087	K20.00901	354	27
1316 302 091	K20.00190	298	27
1316 302 091	K20.00190	332	27
1316 302 091	K20.00190	349	7
1316 302 091	K20.00190	354	27
1316 302 219	K20.00809	370	21
1316 302 219	K20.00809	383	9
1316 302 221	K20.01893	370	21
1316 302 221	K20.01893	384	9
1316 302 226	K20.00923	370	21
1316 302 226	K20.00923	385	9
1316 302 234	K20.01792	372	28
1316 303 001	K20.00201	320	94
1316 303 002	K20.00197	320	94
1316 303 004	K20.00202	320	95
1316 303 005	K20.00206	336	80
1316 303 005	K20.00206	350	6
1316 303 005	K20.00206	350	6
1316 303 005	K20.00206	376	93

Original parts names, oem numbers, symbols and descriptions used in this catalogue are for reference purposes only.

OEM NO	KAÇMAZ NO	PAGE	FIG
1316 303 005	K20.00206	386	6
1316 303 006	K20.00205	320	96
1316 303 007	K20.00451	320	97
1316 303 008	K20.00450	320	97
1316 303 030	K20.00200	336	78
1316 303 030	K20.00200	350	4
1316 303 030	K20.00200	376	91
1316 303 030	K20.00200	386	4
1316 303 031	K20.00198	320	94
1316 303 033	K20.00424	302	88
1316 303 033	K20.00424	336	81
1316 303 033	K20.00424	350	7
1316 303 033	K20.00424	376	94
1316 303 033	K20.00424	386	7
1316 303 034	K20.00449	320	97
1316 303 036	K20.00983	302	93
1316 303 038	K20.00457	358	81
1316 303 040	K20.00222	358	80
1316 303 052	K20.00451	320	97
1316 303 053	K20.00450	320	97
1316 303 055	K20.00216	302	85
1316 303 056	K20.00215	302	85
1316 303 058	K20.00218	302	87
1316 303 063	K20.00217	302	86
1316 303 064	K20.00199	336	78
1316 303 064	K20.00199	350	4
1316 303 064	K20.00199	358	78
1316 303 064	K20.00199	376	91
1316 303 065	K20.00203	336	79
1316 303 065	K20.00203	350	5
1316 303 065	K20.00203	358	79
1316 303 065	K20.00203	376	92
1316 303 065	K20.00203	386	5
1316 303 071	K20.00199	336	78
1316 303 071	K20.00199	350	4
1316 303 071	K20.00199	358	78
1316 303 071	K20.00199	376	91
1316 303 071	K20.00199	386	4
1316 304 002	K20.00213	300	53
1316 304 002	K20.00213	334	53
1316 304 002	K20.00213	345	19
1316 304 002	K20.00213	346	19
1316 304 002	K20.00213	356	53
1316 304 002	K20.00213	374	65
1316 304 002	K20.00213	382	19
1316 304 003	K20.00212	316	61
1316 304 007	K20.00207	316	54
1316 304 008	K20.00211	334	49
1316 304 008	K20.00211	345	15
1316 304 008	K20.00211	374	61
1316 304 008	K20.00211	382	15
1316 304 009	K20.00210	316	57
1316 304 010	K20.00420	300	68
1316 304 010	K20.00420	334	61
1316 304 010	K20.00420	345	26
1316 304 010	K20.00420	346	26
1316 304 010	K20.00420	356	61
1316 304 010	K20.00420	374	80
1316 304 010	K20.00420	382	26
1316 304 012	K20.00423	300	72
1316 304 012	K20.00423	334	65
1316 304 012	K20.00423	345	30
1316 304 012	K20.00423	346	30
1316 304 012	K20.00423	356	65
1316 304 012	K20.00423	376	84
1316 304 012	K20.00423	382	30
1316 304 013	K20.00447	318	77
1316 304 015	K20.00448	318	81
1316 304 066	K20.00223	356	49
1316 304 078	K20.00115	16	43
1316 304 078	K20.00115	20	5
1316 304 078	K20.00115	20	6
1316 304 078	K20.00115	20	3
1316 304 078	K20.00115	210	60b
1316 304 078	K20.00115	218	4
1316 304 078	K20.00115	218	5
1316 304 078	K20.00115	219	6
1316 304 078	K20.00115	260	72
1316 304 078	K20.00115	267	4
1316 304 078	K20.00115	267	5
1316 304 078	K20.00115	268	6
1316 304 078	K20.00115	318	72
1316 304 078	K20.00115	325	4
1316 304 078	K20.00115	325	5
1316 304 078	K20.00115	326	6
1316 304 078	K20.00115	364	4
1316 304 078	K20.00115	365	5
1316 304 078	K20.00115	365	6
1316 304 079	K20.00301	300	51
1316 304 079	K20.00301	345	17
1316 304 079	K20.00301	346	17
1316 304 079	K20.00301	374	63
1316 304 079	K20.00301	382	17
1316 304 093	K20.01507	356	52
1316 304 094	K20.00219	300	49
1316 304 103	K20.00208	298	43
1316 304 103	K20.00208	334	43
1316 304 103	K20.00208	345	8
1316 304 103	K20.00208	346	8
1316 304 103	K20.00208	356	43
1316 304 103	K20.00208	374	55
1316 304 103	K20.00208	382	8
1316 304 118	K20.00948	374	62
1316 304 130	K20.00431	226	55
1316 304 130	K20.00431	316	59
1316 304 131	K20.00456	356	51
1316 304 132	K20.00301	300	51
1316 304 132	K20.00301	334	51
1316 304 132	K20.00301	345	17
1316 304 132	K20.00301	346	17
1316 304 132	K20.00301	374	63
1316 304 132	K20.00301	382	17
1316 304 133	K20.00422	228	70
1316 304 133	K20.00422	244	73
1316 304 133	K20.00422	300	70
1316 304 133	K20.00422	318	79
1316 304 133	K20.00422	334	63
1316 304 133	K20.00422	345	28
1316 304 133	K20.00422	346	28
1316 304 133	K20.00422	356	63
1316 304 133	K20.00422	374	82
1316 304 133	K20.00422	382	28
1316 304 145	K20.00102	210	48
1316 304 145	K20.00102	218	1
1316 304 145	K20.00102	226	47
1316 304 145	K20.00102	236	1
1316 304 145	K20.00102	244	48
1316 304 145	K20.00102	249	1
1316 304 145	K20.00102	276	44
1316 304 145	K20.00102	283	1
1316 304 145	K20.00102	288	9
1316 304 145	K20.00102	298	44
1316 304 145	K20.00102	307	1
1316 304 145	K20.00102	334	44
1316 304 145	K20.00102	341	1
1316 304 145	K20.00102	345	9
1316 304 145	K20.00102	356	44
1316 304 145	K20.00102	363	1
1316 304 146	K20.00910	276	54
1316 304 146	K20.00910	334	54
1316 304 146	K20.00910	356	54
1316 304 147	K20.00136	288	11
1316 304 147	K20.00136	345	11
1316 304 148	K20.00180	276	56
1316 304 148	K20.00180	288	22
1316 304 148	K20.00180	334	56
1316 304 148	K20.00180	342	3

Original parts names, oem numbers, symbols and descriptions used in this catalogue are for reference purposes only.

OEM NO	KAÇMAZ NO	PAGE	FIG
1316 304 148	K20.00180	345	22
1316 304 148	K20.00180	356	56
1316 304 148	K20.00180	364	3
1316 304 149	K20.00109	210	49
1316 304 149	K20.00109	218	2
1316 304 149	K20.00109	218	1
1316 304 149	K20.00109	226	48
1316 304 149	K20.00109	236	2
1316 304 149	K20.00109	236	1
1316 304 149	K20.00109	244	49
1316 304 149	K20.00109	249	1
1316 304 149	K20.00109	249	2
1316 304 149	K20.00109	276	45
1316 304 149	K20.00109	283	2
1316 304 149	K20.00109	283	1
1316 304 149	K20.00109	288	10
1316 304 149	K20.00109	307	2
1316 304 149	K20.00109	307	1
1316 304 149	K20.00109	307	2
1316 304 149	K20.00109	334	45
1316 304 149	K20.00109	341	1
1316 304 149	K20.00109	341	2
1316 304 149	K20.00109	345	10
1316 304 149	K20.00109	356	45
1316 304 149	K20.00109	363	2
1316 304 149	K20.00109	364	1
1316 304 150	K20.00113	210	58a
1316 304 150	K20.00113	219	2
1316 304 150	K20.00113	244	58
1316 304 150	K20.00113	250	2
1316 304 150	K20.00113	276	55
1316 304 150	K20.00113	284	2
1316 304 150	K20.00113	287	21
1316 304 150	K20.00113	288	21
1316 304 150	K20.00113	300	55
1316 304 150	K20.00113	308	2
1316 304 150	K20.00113	334	55
1316 304 150	K20.00113	342	2
1316 304 150	K20.00113	345	21
1316 304 150	K20.00113	346	21
1316 304 150	K20.00113	356	55
1316 304 150	K20.00113	364	2
1316 304 150	K20.00113	374	67
1316 304 150	K20.00113	382	21
1316 304 156	K20.00183	210	57a
1316 304 156	K20.00183	219	1
1316 304 156	K20.00183	244	57
1316 304 156	K20.00183	250	1
1316 304 156	K20.00183	276	54
1316 304 156	K20.00183	284	1
1316 304 156	K20.00183	287	20
1316 304 156	K20.00183	288	20
1316 304 156	K20.00183	300	54
1316 304 156	K20.00183	308	1
1316 304 156	K20.00183	334	54
1316 304 156	K20.00183	342	1
1316 304 156	K20.00183	345	20
1316 304 156	K20.00183	346	20
1316 304 156	K20.00183	356	54
1316 304 156	K20.00183	364	1
1316 304 156	K20.00183	365	1
1316 304 156	K20.00183	374	66
1316 304 156	K20.00183	381	1
1316 304 156	K20.00183	382	20
1316 304 159	K20.00102	210	48
1316 304 159	K20.00102	218	1
1316 304 159	K20.00102	226	47
1316 304 159	K20.00102	236	1
1316 304 159	K20.00102	244	48
1316 304 159	K20.00102	249	1
1316 304 159	K20.00102	276	44
1316 304 159	K20.00102	283	1
1316 304 159	K20.00102	288	9
1316 304 159	K20.00102	298	44
1316 304 159	K20.00102	307	1
1316 304 159	K20.00102	334	44
1316 304 159	K20.00102	341	1
1316 304 159	K20.00102	345	9
1316 304 159	K20.00102	356	44
1316 304 159	K20.00102	363	1
1316 304 162	K20.00136	210	50a
1316 304 162	K20.00136	218	3
1316 304 162	K20.00136	218	2
1316 304 162	K20.00136	226	49a
1316 304 162	K20.00136	236	3
1316 304 162	K20.00136	236	2
1316 304 162	K20.00136	244	50
1316 304 162	K20.00136	249	2
1316 304 162	K20.00136	249	3
1316 304 162	K20.00136	276	46
1316 304 162	K20.00136	283	3
1316 304 162	K20.00136	283	2
1316 304 162	K20.00136	288	11
1316 304 162	K20.00136	300	46
1316 304 162	K20.00136	307	3
1316 304 162	K20.00136	307	2
1316 304 162	K20.00136	334	46
1316 304 162	K20.00136	341	2
1316 304 162	K20.00136	341	3
1316 304 162	K20.00136	345	11
1316 304 162	K20.00136	356	46
1316 304 162	K20.00136	363	3
1316 304 162	K20.00136	364	2
1316 304 163	K20.00180	210	59a
1316 304 163	K20.00180	219	3
1316 304 163	K20.00180	244	59
1316 304 163	K20.00180	250	3
1316 304 163	K20.00180	276	56
1316 304 163	K20.00180	284	3
1316 304 163	K20.00180	288	22
1316 304 163	K20.00180	300	56
1316 304 163	K20.00180	308	3
1316 304 163	K20.00180	334	56
1316 304 163	K20.00180	342	3
1316 304 163	K20.00180	345	22
1316 304 163	K20.00180	356	56
1316 304 163	K20.00180	364	3
1316 304 167	K20.00103	16	33
1316 304 167	K20.00103	19	5
1316 304 167	K20.00103	19	6
1316 304 167	K20.00103	20	5
1316 304 167	K20.00103	210	51
1316 304 167	K20.00103	218	6
1316 304 167	K20.00103	218	5
1316 304 167	K20.00103	226	50
1316 304 167	K20.00103	236	6
1316 304 167	K20.00103	236	5
1316 304 167	K20.00103	244	51
1316 304 167	K20.00103	249	5
1316 304 167	K20.00103	249	6
1316 304 167	K20.00103	276	47
1316 304 167	K20.00103	283	3
1316 304 167	K20.00103	283	6
1316 304 167	K20.00103	283	5
1316 304 167	K20.00103	288	14
1316 304 167	K20.00103	300	47
1316 304 167	K20.00103	307	6
1316 304 167	K20.00103	307	5
1316 304 167	K20.00103	307	3
1316 304 167	K20.00103	334	47
1316 304 167	K20.00103	341	5
1316 304 167	K20.00103	341	6
1316 304 167	K20.00103	341	3
1316 304 167	K20.00103	345	14
1316 304 167	K20.00103	356	47
1316 304 167	K20.00103	363	3
1316 304 167	K20.00103	363	6

Original parts names, oem numbers, symbols and descriptions used in this catalogue are for reference purposes only.

OEM NO	KAÇMAZ NO	PAGE	FIG
1316 304 167	K20.00103	364	5
1316 304 168	K20.00109	210	49
1316 304 168	K20.00109	218	2
1316 304 168	K20.00109	218	1
1316 304 168	K20.00109	226	48
1316 304 168	K20.00109	236	2
1316 304 168	K20.00109	236	1
1316 304 168	K20.00109	244	49
1316 304 168	K20.00109	249	1
1316 304 168	K20.00109	249	2
1316 304 168	K20.00109	276	45
1316 304 168	K20.00109	283	2
1316 304 168	K20.00109	283	1
1316 304 168	K20.00109	288	10
1316 304 168	K20.00109	298	45
1316 304 168	K20.00109	307	1
1316 304 168	K20.00109	307	2
1316 304 168	K20.00109	334	45
1316 304 168	K20.00109	341	1
1316 304 168	K20.00109	341	2
1316 304 168	K20.00109	345	10
1316 304 168	K20.00109	356	45
1316 304 168	K20.00109	363	2
1316 304 168	K20.00109	363	2
1316 304 168	K20.00109	364	1
1316 304 169	K20.00114	210	60a
1316 304 169	K20.00114	219	6
1316 304 169	K20.00114	244	60
1316 304 169	K20.00114	250	6
1316 304 169	K20.00114	276	57
1316 304 169	K20.00114	284	6
1316 304 169	K20.00114	284	3
1316 304 169	K20.00114	288	23
1316 304 169	K20.00114	300	57
1316 304 169	K20.00114	308	3
1316 304 169	K20.00114	308	6
1316 304 169	K20.00114	334	57
1316 304 169	K20.00114	342	3
1316 304 169	K20.00114	342	6
1316 304 169	K20.00114	345	23
1316 304 169	K20.00114	356	57
1316 304 169	K20.00114	364	3
1316 304 169	K20.00114	364	6
1316 304 170	K20.00113	210	58a
1316 304 170	K20.00113	219	2
1316 304 170	K20.00113	244	58
1316 304 170	K20.00113	250	2
1316 304 170	K20.00113	276	55
1316 304 170	K20.00113	284	2
1316 304 170	K20.00113	287	21
1316 304 170	K20.00113	288	21
1316 304 170	K20.00113	300	55
1316 304 170	K20.00113	308	2
1316 304 170	K20.00113	334	55
1316 304 170	K20.00113	342	2
1316 304 170	K20.00113	345	21
1316 304 170	K20.00113	346	21
1316 304 170	K20.00113	356	55
1316 304 170	K20.00113	364	2
1316 304 170	K20.00113	365	2
1316 304 170	K20.00113	374	67
1316 304 170	K20.00113	381	2
1316 304 170	K20.00113	382	21
1316 304 188	K20.00871	276	47
1316 304 188	K20.00871	283	6
1316 304 188	K20.00871	284	5
1316 304 188	K20.00871	287	14
1316 304 188	K20.00871	300	47
1316 304 188	K20.00871	307	5
1316 304 188	K20.00871	307	6
1316 304 188	K20.00871	334	47
1316 304 188	K20.00871	341	5
1316 304 188	K20.00871	341	6
1316 304 188	K20.00871	346	14
1316 304 188	K20.00871	356	47
1316 304 188	K20.00871	370	20
1316 304 188	K20.00871	374	59
1316 304 188	K20.00871	381	6
1316 304 188	K20.00871	381	5
1316 304 188	K20.00871	382	14
1316 304 188	K20.00871	383	15
1316 304 188	K20.00871	384	15
1316 304 188	K20.00871	385	15
1316 304 189	K20.00880	276	45
1316 304 189	K20.00880	283	2
1316 304 189	K20.00880	284	2
1316 304 189	K20.00880	287	10
1316 304 189	K20.00880	298	45
1316 304 189	K20.00880	307	2
1316 304 189	K20.00880	334	45
1316 304 189	K20.00880	341	2
1316 304 189	K20.00880	346	10
1316 304 189	K20.00880	356	45
1316 304 189	K20.00880	364	2
1316 304 189	K20.00880	370	19
1316 304 189	K20.00880	374	57
1316 304 189	K20.00880	381	2
1316 304 189	K20.00880	382	10
1316 304 189	K20.00880	383	8
1316 304 189	K20.00880	384	8
1316 304 189	K20.00880	385	8
1316 304 190	K20.00881	276	44
1316 304 190	K20.00881	283	1
1316 304 190	K20.00881	284	1
1316 304 190	K20.00881	287	9
1316 304 190	K20.00881	298	44
1316 304 190	K20.00881	307	1
1316 304 190	K20.00881	334	44
1316 304 190	K20.00881	341	1
1316 304 190	K20.00881	346	9
1316 304 190	K20.00881	356	44
1316 304 190	K20.00881	364	1
1316 304 190	K20.00881	370	18
1316 304 190	K20.00881	374	56
1316 304 190	K20.00881	381	1
1316 304 190	K20.00881	382	9
1316 304 190	K20.00881	383	7
1316 304 190	K20.00881	384	7
1316 304 190	K20.00881	385	7
1316 304 235	K20.00423	300	72
1316 304 235	K20.00423	334	65
1316 304 235	K20.00423	356	65
1316 304 235	K20.00423	376	84
1316 305 001	K20.00656	302	90
1316 305 001	K20.00656	320	100
1316 305 001	K20.00656	336	83
1316 305 001	K20.00656	358	83
1316 305 001	K20.00656	376	96
1316 305 002	K20.00639	320	100
1316 305 008	K20.00656	302	90
1316 305 008	K20.00656	320	100
1316 305 008	K20.00656	336	83
1316 305 008	K20.00656	358	83
1316 305 008	K20.00656	376	96
1316 306 015	K20.00325	76	59
1316 306 015	K20.00325	272	6
1316 306 015	K20.00325	296	6
1316 306 015	K20.00325	330	6
1316 306 015	K20.00325	352	6
1316 306 015	K20.00325	372	37
1316 312 015	K20.00885	296	19
1316 312 015	K20.00885	312	23
1316 312 015	K20.00885	330	19
1316 312 023	K20.00654	296	9
1316 312 023	K20.00654	330	9
1316 312 023	K20.00654	352	9
1316 312 024		312	13

Original parts names, oem numbers, symbols and descriptions used in this catalogue are for reference purposes only.

OEM NO	KAÇMAZ NO	PAGE	FIG
1316 332 019	K20.00321	60	47
1316 332 019	K20.00321	100	46
1316 332 042	K20.00665	360	15
1316 332 043	K20.00221	360	8
1316 332 044	K20.01699	360	16
1316 332 068	K20.01693	360	1
1316 332 069	K20.01697	360	4
1316 332 073	K20.00666	360	17
1316 332 096	K20.00425	338	3
1316 332 097	K20.00458	360	9
1316 332 103	K20.00647	280	12
1316 332 103	K20.00647	304	12
1316 332 103	K20.00647	338	13
1316 332 103	K20.00647	378	13
1316 332 108	K20.01593	278	69
1316 332 108	K20.01593	336	69
1316 332 108	K20.01593	358	69
1316 332 109	K20.01692	302	76
1316 332 130	K20.00647	280	12
1316 332 130	K20.00647	304	12
1316 332 130	K20.00647	338	13
1316 332 130	K20.00647	378	13
1316 332 140	K20.01770	338	3
1316 332 141		360	9
1316 333 010	K20.00464	360	20
1316 333 014	K20.01578	280	9
1316 333 014	K20.01578	304	9
1316 333 014	K20.01578	338	10
1316 333 014	K20.01578	360	19
1316 333 026	K20.00464	360	20
1316 333 034	K20.00831	280	22
1316 333 034	K20.00831	284	6
1316 333 034	K20.00831	284	7
1316 333 034	K20.00831	304	22
1316 333 034	K20.00831	309	6
1316 333 034	K20.00831	309	7
1316 333 034	K20.00831	338	23
1316 333 034	K20.00831	342	6
1316 333 034	K20.00831	342	7
1316 333 034	K20.00831	360	27
1316 333 034	K20.00831	366	6
1316 333 034	K20.00831	366	7
1316 334 005		322	10
1316 334 010	K20.00659	338	28
1316 334 011	K20.00667	360	29
1316 334 016	K20.00659	338	28
1316 338 002	K20.00453	340	44
1317 304 026	K20.00679	2	12
1317 304 031	K20.00692	4	25
1317 304 081	K20.00682	2	14
1317 304 114	K20.00691	4	24
1317 304 125	K20.00693	4	26
1317 304 126	K20.00683	2	15
1317 304 149	K20.00691	4	24
1317 304 150	K20.00678	2	11
1324 201 025		76	76
1324 201 028		72	13
1324 201 029		76	76
1324 201 030		72	13
1324 201 031		72	13
1324 201 033		76	76
1324 201 041		76	76
1324 201 045		76	76
1324 201 058		72	13
1324 202 004	K20.01819	72	17
1324 202 004	K20.01819	85	3
1324 202 006	K20.01948	72	17
1324 202 012	K20.01949	72	17
1324 202 012	K20.01949	85	3
1324 202 014	K20.00971	72	17
1324 202 018	K20.01805	72	17
1324 202 018	K20.01805	84	3
1324 202 033	K20.01809	72	17
1324 202 033	K20.01809	84	3
1324 202 036	K20.01806	72	17
1324 202 036	K20.01806	85	3
1324 204 009	K20.00975	72	22
1324 204 009	K20.00975	82	6
1324 204 009	K20.00975	83	6
1324 207 004	K20.00813	262	103
1324 207 004	K20.00813	278	86
1324 207 004	K20.00813	302	94
1324 207 004	K20.00813	320	103
1324 207 004	K20.00813	336	86
1324 207 004	K20.00813	358	86
1324 207 017	K20.00814	56	70
1324 207 017	K20.00814	96	91
1324 207 033	K20.00819	262	104
1324 207 033	K20.00819	278	87
1324 207 033	K20.00819	302	95
1324 207 033	K20.00819	320	104
1324 207 033	K20.00819	336	87
1324 207 033	K20.00819	358	87
1324 207 033	K20.00819	376	98
1324 207 034	K20.00822	56	70
1324 207 034	K20.00822	96	91
1324 207 035	K20.00838	262	105
1324 207 035	K20.00838	278	88
1324 207 035	K20.00838	282	61
1324 207 035	K20.00838	302	96
1324 207 035	K20.00838	306	61
1324 207 035	K20.00838	320	105
1324 207 035	K20.00838	336	88
1324 207 035	K20.00838	358	88
1324 207 035	K20.00838	376	99
1324 232 002	K20.01787	78	3
1324 232 004	K20.00979	78	2
1324 232 004	K20.01066	78	7
1324 233 001	K20.00841	78	25
1324 233 006	K20.00230	30	15
1324 233 006	K20.00230	58	16
1324 233 006	K20.00230	78	16
1324 233 006	K20.00230	98	15
1324 298 003	K20.01885	81	
1324 298 003	K20.01885	81	
1324 298 004	K20.01883	81	
1324 301 169	K20.02119	22	9
1324 301 169	K20.02119	72	12
1324 301 176		80	39
1324 302 003		72	5
1324 302 003		72	15
1324 302 004	K20.01819	72	17
1324 302 004	K20.01819	85	3
1324 302 005		72	7
1324 302 015	K20.01949	85	3
1324 302 024		72	4
1324 302 026		72	4
1324 302 029	K20.00971	72	17
1324 302 031	K20.01805	72	17
1324 302 031	K20.01805	84	3
1324 302 052	K20.01809	72	17
1324 302 052	K20.01809	84	3
1324 302 056	K20.01806	72	17
1324 302 056	K20.01806	85	3
1324 303 001	K20.00960	76	70
1324 303 001	K20.00960	86	7
1324 303 003	K20.00972	76	68
1324 303 003	K20.00972	86	5
1324 303 004	K20.01795	76	67
1324 303 004	K20.01795	86	4
1324 303 007	K20.01790	76	67
1324 303 007	K20.01790	86	4
1324 303 014		72	10
1324 303 015	K20.00963	76	69
1324 303 015	K20.00963	86	6
1324 303 017	K20.00963	76	69
1324 303 017	K20.00963	86	6

Original parts names, oem numbers, symbols and descriptions used in this catalogue are for reference purposes only.

OEM NO	KAÇMAZ NO	PAGE	FIG
1324 303 018	K20.00964	76	68
1324 303 018	K20.00964	86	5
1324 304 003	K20.00976	74	34
1324 304 003	K20.00976	83	12
1324 304 005	K20.00961	76	52
1324 304 005	K20.00961	82	24
1324 304 005	K20.00961	83	24
1324 304 006	K20.00962	74	26
1324 304 006	K20.00962	81	4
1324 304 006	K20.00962	82	8
1324 304 006	K20.00962	83	8
1324 304 009	K20.00959	74	34
1324 304 009	K20.00959	82	12
1324 304 011	K20.00966	74	23
1324 304 011	K20.00966	81	1
1324 304 011	K20.00966	82	4
1324 304 011	K20.00966	83	4
1324 304 013	K20.00965	74	40
1324 304 013	K20.00965	81	1
1324 304 013	K20.00965	82	18
1324 304 013	K20.00965	83	18
1324 304 014	K20.01506	26	51
1324 304 014	K20.01506	52	45
1324 304 014	K20.01506	65	26
1324 304 014	K20.01506	66	26
1324 304 014	K20.01506	67	26
1324 304 014	K20.01506	76	53
1324 304 014	K20.01506	82	25
1324 304 014	K20.01506	83	25
1324 304 014	K20.01506	92	52
1324 304 014	K20.01506	105	19
1324 304 014	K20.01506	106	19
1324 304 014	K20.01506	258	60
1324 304 014	K20.01506	276	52
1324 304 014	K20.01506	287	18
1324 304 014	K20.01506	288	18
1324 304 014	K20.01506	300	52
1324 304 014	K20.01506	316	60
1324 304 014	K20.01506	334	52
1324 304 014	K20.01506	345	18
1324 304 014	K20.01506	346	18
1324 304 014	K20.01506	374	64
1324 304 014	K20.01506	382	18
1324 304 015	K20.01788	74	39
1324 304 015	K20.01788	82	17
1324 304 015	K20.01788	83	17
1324 304 021	K20.00462	54	54
1324 304 021	K20.00462	65	33
1324 304 021	K20.00462	76	62
1324 304 021	K20.00462	82	31
1324 304 021	K20.00462	83	31
1324 304 028	K20.01784	78	1
1324 304 030	K20.00977	74	50
1324 304 030	K20.00977	82	22
1324 304 030	K20.00977	83	22
1324 304 037	K20.00080	54	48
1324 304 037	K20.00080	65	29
1324 304 037	K20.00080	66	29
1324 304 037	K20.00080	67	29
1324 304 037	K20.00080	76	56
1324 304 037	K20.00080	82	28
1324 304 037	K20.00080	83	28
1324 304 052	K20.00297	52	31
1324 304 052	K20.00297	63	2
1324 304 052	K20.00297	65	19
1324 304 052	K20.00297	66	19
1324 304 052	K20.00297	67	19
1324 304 052	K20.00297	74	42
1324 304 052	K20.00297	81	3
1324 304 052	K20.00297	81	2
1324 304 052	K20.00297	82	20
1324 304 052	K20.00297	83	20
1324 304 052	K20.00297	64	3
1324 304 053	K20.00255	8	19
1324 304 053	K20.00255	24	38
1324 304 053	K20.00255	52	34
1324 304 053	K20.00255	63	5
1324 304 053	K20.00255	64	6
1324 304 053	K20.00255	65	22
1324 304 053	K20.00255	66	22
1324 304 053	K20.00255	67	22
1324 304 053	K20.00255	74	43
1324 304 053	K20.00255	81	6
1324 304 053	K20.00255	81	5
1324 304 053	K20.00255	82	21
1324 304 053	K20.00255	83	21
1324 304 053	K20.00255	92	60
1324 304 053	K20.00255	103	5
1324 304 053	K20.00255	104	6
1324 304 053	K20.00255	105	27
1324 304 053	K20.00255	106	27
1324 304 070	K20.00320	52	26
1324 304 070	K20.00320	74	37
1324 304 070	K20.00320	82	15
1324 304 070	K20.00320	83	15
1324 304 080	K20.00976	74	34
1324 304 085	K20.00959	74	34
1324 304 085	K20.00959	82	12
1324 305 001	K20.01950	76	74
1324 306 013		74	44
1324 306 025		76	60
1324 306 026		74	46
1324 306 027		74	33
1324 306 027		74	46
1324 306 031		74	32
1324 306 032		74	32
1324 306 034		74	47
1324 306 036		74	44
1324 306 039		76	58
1324 306 042		76	60
1324 332 007	K20.00980	78	14
1324 332 016	K20.01789	78	4
1324 332 018	K20.00981	78	11
1324 332 048	K20.00980	78	14
1324 334 009		78	28
1324 338 004		80	45
1325 201 024		370	8
1325 201 025		370	8
1325 201 026		370	8
1325 201 031		376	100
1325 201 033		376	100
1325 201 034		376	100
1325 201 044		370	8
1325 233 007	K20.00891	378	25
1325 233 008	K20.00968	381	
1325 298 007	K20.00878	381	
1325 298 008	K20.00879	284	
1325 298 008	K20.00879	307	
1325 298 008	K20.00879	341	
1325 298 008	K20.00879	364	
1325 298 008	K20.00879	381	
1325 298 009	K20.01783	381	
1325 301 065		378	36
1325 302 044	K20.01070	370	2
1325 302 044	K20.91070	376	101
1325 302 048	K20.01075	370	2
1325 302 048	K20.91075	376	101
1325 302 052	K20.01074	370	2
1325 302 052	K20.91074	376	101
1325 302 055	K20.01076	370	2
1325 302 055	K20.91076	376	101
1325 303 017	K20.00873	370	6
1325 312 012	K20.00874	372	46
1325 331 001		380	41
1325 332 011		378	10
1325 332 012		380	43
1325 332 021		380	43

Original parts names, oem numbers, symbols and descriptions used in this catalogue are for reference purposes only.

OEM NO	KAÇMAZ NO	PAGE	FIG
1325 332 026		380	43
1325 332 036		380	43
1325 333 016	K20.00933	378	14
1325 333 018	K20.00870	378	23
1325 333 018	K20.00870	381	6
1325 334 007		378	27
1325 334 008	K20.00869	378	26
1325 334 013		378	35
1325 334 017		378	28
1327 203 037	K20.00795	394	51
1327 203 038	K20.01863	394	51
1327 203 039	K20.01866	394	52
1327 203 040	K20.01865	394	52
1327 203 043	K20.01862	394	51
1327 203 045	K20.01864	394	52
1327 203 054	K20.01863	394	51
1327 203 055	K20.01865	394	52
1327 203 057		394	51
1327 203 060		394	52
1327 206 004		394	63
1327 207 009		56	70
1327 207 009		96	91
1327 301 049		392	48
1327 302 005	K20.01835	390	15
1327 302 006	K20.01837	390	15
1327 302 015	K20.01837	390	15
1327 304 002	K20.01833	392	39
1327 304 015	K20.01834	392	29
1327 304 024	K20.01836	392	39
1327 304 031		392	29
1327 304 032	K20.01838	392	45
1327 304 033	K20.02195	392	38
1327 304 034	K20.02196	392	38
1327 304 035	K20.02197	392	38
1327 304 036	K20.02198	392	38
1327 304 037		392	39
1327 304 050		392	48
1327 306 007		394	64
1327 334 009	K20.02117	398	42
1327 334 009	K20.02117	410	42
1328 201 033	K20.02107	398	30
1328 201 033	K20.02107	408	30
1328 202 038		392	35
1328 202 038		404	35
1328 202 046	K20.01839	390	18
1328 202 046	K20.01839	402	18
1328 202 047	K20.01842	390	21
1328 202 047	K20.01842	404	21
1328 202 048	K20.01841	390	21
1328 202 048	K20.01841	404	21
1328 202 049	K20.01786	390	24
1328 202 049	K20.01786	404	24
1328 203 049	K20.01870	406	52
1328 203 050	K20.00945	406	52
1328 203 051	K20.01871	406	53
1328 203 052	K20.00944	406	53
1328 203 056	K20.01871	406	53
1328 203 057	K20.01870	406	52
1328 206 006		406	64
1328 212 002		394	65
1328 212 002		406	67
1328 232 016	K20.02103	396	22
1328 232 016	K20.02171	398	43
1328 232 016	K20.02103	408	22
1328 232 016	K20.02171	410	43
1328 233 001	K20.01968	396	21
1328 233 001	K20.01968	408	21
1328 298 001	K20.01786	390	24
1328 298 001	K20.01786	404	24
1328 298 002	K20.01840	390	24
1328 298 002	K20.01840	404	24
1328 301 139		402	5
1328 301 141		402	5
1328 301 142		402	5
1328 301 144		402	5
1328 301 163		404	49
1328 301 170	K20.02109	398	32
1328 301 170	K20.02109	410	32
1328 302 024		390	13
1328 302 024		402	13
1328 302 061	K20.02168	392	28
1328 302 061	K20.02168	404	28
1328 302 062	K20.01858	402	15
1328 302 063	K20.01857	402	15
1328 302 064	K20.01844	390	19
1328 302 064	K20.01844	404	19
1328 302 072		390	17
1328 302 072		402	17
1328 302 075		392	31
1328 302 075		404	31
1328 302 077	K20.00922	390	16
1328 302 077	K20.00922	402	16
1328 302 078	K20.00882	390	16
1328 302 078	K20.00882	402	16
1328 302 079	K20.01959	402	16
1328 302 080	K20.01952	390	16
1328 302 080	K20.01952	402	16
1328 302 082	K20.01957	402	16
1328 302 096		390	4
1328 302 096		402	4
1328 302 118		394	55
1328 302 118		406	56
1328 302 119	K20.01956	402	16
1328 302 132	K20.01843	390	20
1328 302 132	K20.01843	404	20
1328 302 133	K20.01958	402	16
1328 302 202		390	1
1328 302 202		402	1
1328 302 203		390	9
1328 302 203		402	9
1328 304 018	K20.01854	404	41
1328 304 035		392	46
1328 304 035		404	47
1328 304 040	K20.01855	404	39
1328 304 043	K20.01845	392	37
1328 304 043	K20.01845	404	37
1328 304 044	K20.01856	404	29
1328 304 060	K20.01832	392	42
1328 304 060	K20.01832	404	42
1328 304 061	K20.01831	392	43
1328 304 061	K20.01831	404	43
1328 304 063	K20.01859	404	46
1328 304 064	K20.01845	392	37
1328 304 064	K20.01845	404	37
1328 304 067	K20.01831	392	43
1328 304 067	K20.01831	404	43
1328 304 068	K20.02093	396	11
1328 304 068	K20.02093	408	11
1328 305 007	K20.02007	394	67
1328 305 007	K20.02007	406	69
1328 305 014	K20.01860	394	69
1328 305 014	K20.01860	406	71
1328 305 015	K20.01860	394	69
1328 305 015	K20.01860	406	71
1328 306 021		394	61
1328 306 021		406	62
1328 306 026		394	59
1328 306 026		406	60
1328 306 027		406	65
1328 306 033		406	66
1328 306 034		394	62
1328 306 034		406	63
1328 312 005	K20.02173	394	66
1328 312 005	K20.02173	406	68
1328 331 004	K20.02110	398	34
1328 331 004	K20.02110	410	34
1328 332 023	K20.02101	396	14

Original parts names, oem numbers, symbols and descriptions used in this catalogue are for reference purposes only.

OEM NO	KAÇMAZ NO	PAGE	FIG
1328 332 023	K20.02101	408	14
1328 332 024	K20.02086	396	4
1328 332 024	K20.02086	408	4
1328 332 030	K20.01954	396	15
1328 332 030	K20.01954	408	15
1328 332 041	K20.02106	398	28
1328 332 041	K20.02106	408	28
1328 332 045	K20.01953	396	6
1328 332 045	K20.01953	408	6
1328 332 046	K20.02088	396	5
1328 332 046	K20.02088	408	5
1328 333 003	K20.01966	396	20
1328 333 003	K20.01966	408	20
1328 333 005	K20.01967	396	17
1328 333 005	K20.01967	408	17
1328 333 006	K20.02081	396	2
1328 333 006	K20.02081	408	2
1328 333 009	K20.02092	396	10
1328 333 009	K20.02092	408	10
1328 333 010	K20.02084	396	1
1328 333 010	K20.02084	408	1
1328 334 004	K20.02115	398	40
1328 334 004	K20.02115	410	40
1328 334 017	K20.02116	398	41
1328 334 017	K20.02116	410	41
1346 304 118	K20.00680	2	12
1348 332 226	K20.02112	398	36
1349 204 001	K20.01875	19	
1355 302 002	K20.00151	289	7
1355 302 012	K20.00668	292	7
1356 102 004	K20.01896	385	1
1356 102 005	K20.01891	383	1
1356 102 006	K20.01892	383	1
1356 102 008	K20.01894	384	1
1356 102 009	K20.01895	384	1
1356 103 002	K20.00861	350	1
1356 103 002	K20.00861	386	1
1356 103 003	K20.00862	350	1
1356 103 003	K20.00862	386	1
1356 104 016	K20.00929	346	1
1356 104 016	K20.00929	382	1
1356 204 004	K20.00903	365	
1356 204 006	K20.01794	283	
1356 204 006	K20.01794	307	
1356 204 006	K20.01794	341	
1356 204 006	K20.01794	364	
1356 204 006	K20.01794	381	
1356 204 007	K20.01793	284	
1356 204 007	K20.01793	342	
1356 204 007	K20.01793	381	
1356 204 022	K20.00889	284	3
1356 204 022	K20.00889	342	3
1356 204 022	K20.00889	365	3
1356 206 001		376	85
1356 206 002		374	77
1356 206 004		374	60
1356 212 002		372	39
1356 302 100	K20.00923	370	21
1356 302 100	K20.00923	385	9
1356 302 101	K20.00809	370	21
1356 302 101	K20.00809	383	9
1356 302 103	K20.01893	370	21
1356 302 103	K20.01893	384	9
1356 302 116	K20.01792	372	28
1356 302 117	K20.01951	372	28
1356 304 019	K20.00898	276	46
1356 304 019	K20.00898	283	3
1356 304 019	K20.00898	287	11
1356 304 019	K20.00898	300	46
1356 304 019	K20.00898	307	3
1356 304 019	K20.00898	334	46
1356 304 019	K20.00898	341	3
1356 304 019	K20.00898	346	11
1356 304 019	K20.00898	356	46
1356 304 019	K20.00898	364	3
1356 304 019	K20.00898	374	58
1356 304 019	K20.00898	381	3
1356 304 019	K20.00898	382	11
1356 304 022	K20.00889	276	56
1356 304 022	K20.00889	287	22
1356 304 022	K20.00889	334	56
1356 304 022	K20.00889	346	22
1356 304 022	K20.00889	356	56
1356 304 022	K20.00889	374	68
1356 304 022	K20.00889	381	3
1356 304 022	K20.00889	382	22
1356 304 023	K20.00871	276	47
1356 304 023	K20.00871	283	6
1356 304 023	K20.00871	284	5
1356 304 023	K20.00871	287	14
1356 304 023	K20.00871	300	47
1356 304 023	K20.00871	307	5
1356 304 023	K20.00871	307	6
1356 304 023	K20.00871	334	47
1356 304 023	K20.00871	341	5
1356 304 023	K20.00871	341	6
1356 304 023	K20.00871	346	14
1356 304 023	K20.00871	356	47
1356 304 023	K20.00871	364	5
1356 304 023	K20.00871	364	6
1356 304 023	K20.00871	370	20
1356 304 023	K20.00871	374	59
1356 304 023	K20.00871	381	6
1356 304 023	K20.00871	381	5
1356 304 023	K20.00871	382	14
1356 304 023	K20.00871	383	15
1356 304 023	K20.00871	384	15
1356 304 023	K20.00871	385	15
1356 304 024	K20.00803	276	57
1356 304 024	K20.00803	284	6
1356 304 024	K20.00803	287	23
1356 304 024	K20.00803	334	57
1356 304 024	K20.00803	342	6
1356 304 024	K20.00803	346	23
1356 304 024	K20.00803	356	57
1356 304 024	K20.00803	365	6
1356 304 024	K20.00803	374	69
1356 304 024	K20.00803	381	6
1356 304 024	K20.00803	381	5
1356 304 024	K20.00803	382	23
1358 232 010	K20.02104	396	26
1358 232 010	K20.02104	408	26
1358 232 013	K20.02104	396	26
1358 232 201	K20.02103	396	22
1358 232 201	K20.02171	398	43
1358 232 201	K20.02103	408	22
1358 232 201	K20.02171	410	43
1358 232 202	K20.02103	396	22
1358 232 202	K20.02171	398	43
1358 232 202	K20.02103	408	22
1358 232 202	K20.02171	410	43
1358 304 247		396	11
1358 332 015		396	16
1358 332 015		408	16
1358 332 206	K20.01946	396	6
1358 332 206	K20.01946	408	6
1358 332 210	K20.02111	398	36
1358 332 210	K20.02111	410	36
1358 332 221	K20.02087	396	4
1358 332 221	K20.02087	408	4
1358 332 222	K20.02089	396	5
1358 332 222	K20.02089	408	5
1358 332 223	K20.02101	396	14
1358 332 223	K20.02101	408	14
1358 332 226	K20.02112	410	36
1358 332 229	K20.02106	398	28
1358 332 244	K20.01954	396	15

Original parts names, oem numbers, symbols and descriptions used in this catalogue are for reference purposes only.

OEM NO	KAÇMAZ NO	PAGE	FIG
1358 332 244	K20.01954	408	15
1358 332 245		396	6
1358 332 247	K20.01954	396	15
1358 332 247	K20.01954	408	15
1358 333 012	K20.01966	396	20
1358 333 012	K20.01966	408	20
1358 333 020		396	20
1499 298 001	K20.01545	116	7
1499 298 001	K20.01545	132	7
1499 298 001	K20.01545	146	7
1499 298 001	K20.01545	160	7
1499 298 001	K20.01545	174	7
1499 298 001	K20.01545	190	7
1499 298 002	K20.01543	116	7
1499 298 002	K20.01543	132	7
1499 298 002	K20.01543	146	7
1499 298 002	K20.01543	160	7
1499 298 002	K20.01543	174	7
1499 298 002	K20.01543	190	7
1499 298 003	K20.01541	116	7
1499 298 003	K20.01541	132	7
1499 298 003	K20.01541	146	7
1499 298 003	K20.01541	160	7
1499 298 003	K20.01541	174	7
1499 298 003	K20.01541	190	7
1499 298 023	K20.01569	208	41
1499 298 023	K20.01569	224	40
1499 298 023	K20.01569	242	41
1499 298 023	K20.01569	258	48
1499 298 023	K20.01569	274	35
1499 298 023	K20.01569	298	35
1499 298 023	K20.01569	316	48
1499 298 023	K20.01569	332	35
1499 298 023	K20.01569	354	35
1499 298 023	K20.01569	372	47
1499 298 024	K20.01567	208	41
1499 298 024	K20.01567	224	40
1499 298 024	K20.01567	242	41
1499 298 024	K20.01567	258	48
1499 298 024	K20.01567	274	35
1499 298 024	K20.01567	298	35
1499 298 024	K20.01567	316	48
1499 298 024	K20.01567	332	35
1499 298 024	K20.01567	354	35
1499 298 024	K20.01567	372	47
1499 298 025	K20.01565	208	41
1499 298 025	K20.01565	224	40
1499 298 025	K20.01565	242	41
1499 298 025	K20.01565	258	48
1499 298 025	K20.01565	274	35
1499 298 025	K20.01565	287	2
1499 298 025	K20.01565	288	2
1499 298 025	K20.01565	298	35
1499 298 025	K20.01565	316	48
1499 298 025	K20.01565	332	35
1499 298 025	K20.01565	345	2
1499 298 025	K20.01565	346	2
1499 298 025	K20.01565	354	35
1499 298 025	K20.01565	372	47
1499 298 025	K20.01565	382	2
1499 298 026	K20.01563	208	41
1499 298 026	K20.01563	224	40
1499 298 026	K20.01563	242	41
1499 298 026	K20.01563	258	48
1499 298 026	K20.01563	274	35
1499 298 026	K20.01563	298	35
1499 298 026	K20.01563	316	48
1499 298 026	K20.01563	332	35
1499 298 026	K20.01563	354	35
1499 298 026	K20.01563	372	47
1499 298 027	K20.01561	208	41
1499 298 027	K20.01561	224	40
1499 298 027	K20.01561	242	41
1499 298 027	K20.01561	258	48
1499 298 027	K20.01561	274	35
1499 298 027	K20.01561	298	35
1499 298 027	K20.01561	316	48
1499 298 027	K20.01561	332	35
1499 298 027	K20.01561	354	35
1499 298 027	K20.01561	372	47
1499 298 030	K20.01576	256	26
1499 298 030	K20.01576	314	26
1499 298 032	K20.01574	256	26
1499 298 032	K20.01574	314	26
1499 298 034	K20.01572	256	26
1499 298 034	K20.01572	314	26
1499 298 036	K20.01589	256	26
1499 298 036	K20.01589	314	26
1499 298 038	K20.01591	254	26
1499 298 038	K20.01591	312	26
1499 298 090	K20.01638	116	10
1499 298 090	K20.01638	132	10
1499 298 090	K20.01638	146	10
1499 298 090	K20.01638	160	10
1499 298 090	K20.01638	174	10
1499 298 090	K20.01638	190	10
1499 298 094	K20.01552	116	10
1499 298 094	K20.01552	132	10
1499 298 094	K20.01552	146	10
1499 298 094	K20.01552	160	10
1499 298 094	K20.01552	174	10
1499 298 094	K20.01552	190	10
1499 298 096	K20.01550	116	10
1499 298 096	K20.01550	132	10
1499 298 096	K20.01550	146	10
1499 298 096	K20.01550	160	10
1499 298 096	K20.01550	174	10
1499 298 096	K20.01550	190	10
1499 298 098	K20.01548	116	10
1499 298 098	K20.01548	132	10
1499 298 098	K20.01548	146	10
1499 298 098	K20.01548	160	10
1499 298 098	K20.01548	174	10
1499 298 098	K20.01548	190	10
1499 298 100	K20.01642	116	10
1499 298 100	K20.01642	132	10
1499 298 100	K20.01642	146	10
1499 298 100	K20.01642	160	10
1499 298 100	K20.01642	174	10
1499 298 100	K20.01642	190	10
1499 298 114	K20.01640	116	10
1499 298 114	K20.01640	132	10
1499 298 114	K20.01640	146	10
1499 298 114	K20.01640	160	10
1499 298 114	K20.01640	174	10
1499 298 114	K20.01640	190	10
1499 298 125	K20.01559	118	39
1499 298 125	K20.01559	148	39
1499 298 125	K20.01559	176	39
1499 298 125	K20.01559	206	7
1499 298 125	K20.01559	222	7
1499 298 125	K20.01559	240	8
1499 298 127	K20.01557	118	39
1499 298 127	K20.01557	148	39
1499 298 127	K20.01557	176	39
1499 298 127	K20.01557	206	7
1499 298 127	K20.01557	222	7
1499 298 127	K20.01557	240	8
1499 298 129	K20.01555	118	39
1499 298 129	K20.01555	148	39
1499 298 129	K20.01555	176	39
1499 298 129	K20.01555	206	7
1499 298 129	K20.01555	222	7
1499 298 129	K20.01555	240	8
1499 298 131	K20.01666	206	7
1499 298 131	K20.01666	222	7
1499 298 131	K20.01666	240	8

Original parts names, oem numbers, symbols and descriptions used in this catalogue are for reference purposes only.

OEM NO	KAÇMAZ NO	PAGE	FIG
1499 298 133	K20.01664	206	7
1499 298 133	K20.01664	222	7
1499 298 133	K20.01664	240	8
1499 298 135	K20.01662	206	7
1499 298 135	K20.01662	222	7
1499 298 135	K20.01662	240	8
1499 298 150	K20.01636	90	32
1499 298 152	K20.01634	90	32
1499 298 154	K20.01632	90	32
1499 298 156	K20.01587	90	32
1499 298 157	K20.01538	90	32
1499 298 157	K20.01538	105	2
1499 298 157	K20.01538	106	2
1499 298 158	K20.01536	90	32
1499 298 159	K20.01534	90	32
2049 309 535	K20.01615	32	42
2049 309 535	K20.01615	60	39
2049 309 535	K20.01615	100	38
2050 309 066	K20.01670	206	10
2050 309 066	K20.01670	222	10
2050 309 066	K20.01670	240	11
2050 309 067	K20.01671	206	10
2050 309 067	K20.01671	222	10
2050 309 067	K20.01671	240	11
2050 309 067	K20.01671	254	6
2050 309 067	K20.01671	272	3
2050 309 067	K20.01671	296	3
2050 309 067	K20.01671	312	6
2050 309 067	K20.01671	330	3
2050 309 067	K20.01671	352	3
2050 309 067	K20.01671	370	15
2050 309 068	K20.01672	206	10
2050 309 068	K20.01672	222	10
2050 309 068	K20.01672	240	11
2050 309 068	K20.01672	254	6
2050 309 068	K20.01672	272	3
2050 309 068	K20.01672	296	3
2050 309 068	K20.01672	312	6
2050 309 068	K20.01672	330	3
2050 309 068	K20.01672	352	3
2050 309 068	K20.01672	370	15
4130 306 306		272	2
4130 306 306		330	2
4130 306 306		352	2
6002 305 511	K20.00253	92	46
6002 305 511	K20.00253	103	5
6002 305 511	K20.00253	103	6
6002 305 511	K20.00253	103	7
6002 305 511	K20.00253	105	15
6002 305 511	K20.00253	106	15
6002 305 515	K20.00298	50	19
6002 305 515	K20.00298	63	5
6002 305 515	K20.00298	63	6
6002 305 515	K20.00298	63	7
6002 305 515	K20.00298	65	10
6002 305 515	K20.00298	66	10
6002 305 515	K20.00298	67	10
6002 305 994	K20.00706	4	42
6085 201 048	K20.01637	90	34
6085 201 050	K20.01635	90	34
6085 201 052	K20.01633	90	34
6085 201 054	K20.01586	90	34
6085 201 055	K20.01539	90	34
6085 201 056	K20.01537	90	34
6085 201 057	K20.01535	90	34
6085 201 079		282	36
6085 201 079		306	36
6085 201 079		340	37
6085 203 001	K20.00805	282	47
6085 203 001	K20.00805	306	47
6085 203 001	K20.00805	340	48
6085 301 003	K20.00584	58	26
6085 301 003	K20.00584	80	37
6085 301 003	K20.00584	98	25
6085 301 012	K20.00649	264	35
6085 301 012	K20.00649	282	39
6085 301 012	K20.00649	306	39
6085 301 012	K20.00649	322	34
6085 301 012	K20.00649	340	40
6085 301 012	K20.00649	362	39
6085 301 012	K20.00649	378	39
6085 301 091	K20.01921	18	73
6085 301 093	K20.02220	398	29
6085 301 160		18	72
6085 301 167		322	36
6085 301 217	K20.01955	398	29
6085 301 217	K20.01955	408	29
6085 303 008	K20.00804	282	46
6085 303 008	K20.00804	306	46
6085 303 008	K20.00804	340	47
6085 303 011	K20.00825	282	49
6085 303 011	K20.00825	306	49
6085 303 011	K20.00825	340	50
6085 403 011	K20.00825	282	49
6085 403 011	K20.00825	306	49
6085 403 011	K20.00825	340	50
6091 303 018	K20.01962	282	60
6091 303 018	K20.01962	306	60
6091 303 018	K20.01962	340	61
6091 315 009	K20.02080	282	51
6091 315 009	K20.02080	306	51
6091 315 009	K20.02080	340	52
6091 316 004	K20.01823	282	58
6091 316 004	K20.01823	306	58
6091 316 004	K20.01823	340	59
6093 201 008		378	37
6093 204 010	K20.00934	378	38
6093 304 028		398	29
6093 304 090	K20.01078	398	29
7429 032 102		130	10
7429 032 102		158	10
7429 032 102		172	10
7429 032 102		188	10
7429 032 102		204	10
7429 032 102		220	10
7429 032 102		238	10
7429 032 102		251	10
7429 032 102		268	10
7429 032 102		285	10
7429 032 102		309	10
7429 032 102		326	10
7429 032 102		343	10
7429 032 102		366	10
7636 038 103	K20.02102	396	16

Original parts names, oem numbers, symbols and descriptions used in this catalogue are for reference purposes only.

OEM NO	KAÇMAZ NO	PAGE	FIG

OEM NO	KAÇMAZ NO	PAGE	FIG

OEM NO	KAÇMAZ NO	PAGE	FIG

Original parts names, oem numbers, symbols and descriptions used in this catalogue are for reference purposes only.

- 6 S 850
- 6 S 1550
- 8 S 180
- 9 S 109
- 9 S 75
- 16 S 109
- 6 S 1600 - 1601 - 1700 - 1701 - 1900 - 1901 BD IT / BO IT
- 9 S 1110 - 1111 - 1115 - 1310 - 1311 - 1315

ECOSPLIT I

- 16 S 130
- 16 S 130/1
- 16 S 160
- 16 S 160/1
- 16 S 190
- 16 S 190/1

ECOSPLIT II

- 16 S 150
- 16 S 220
- 16 S 220 A

ECOSPLIT III
NEW ECOSPLIT

- 16 S 151 OLD
- 16 S 151 NEW
- 16 S 181
- 16 S 221 OLD
- 16 S 221 NEW
- 16 S 251 - 16 S 2723 TO - 16 S 2725 TO

ECOSPLIT IV

- 16 SPEEDS

AS TRONIC

- 12 AS TRONIC
- 16 AS TRONIC

- SHIFT CONTROL TOWER

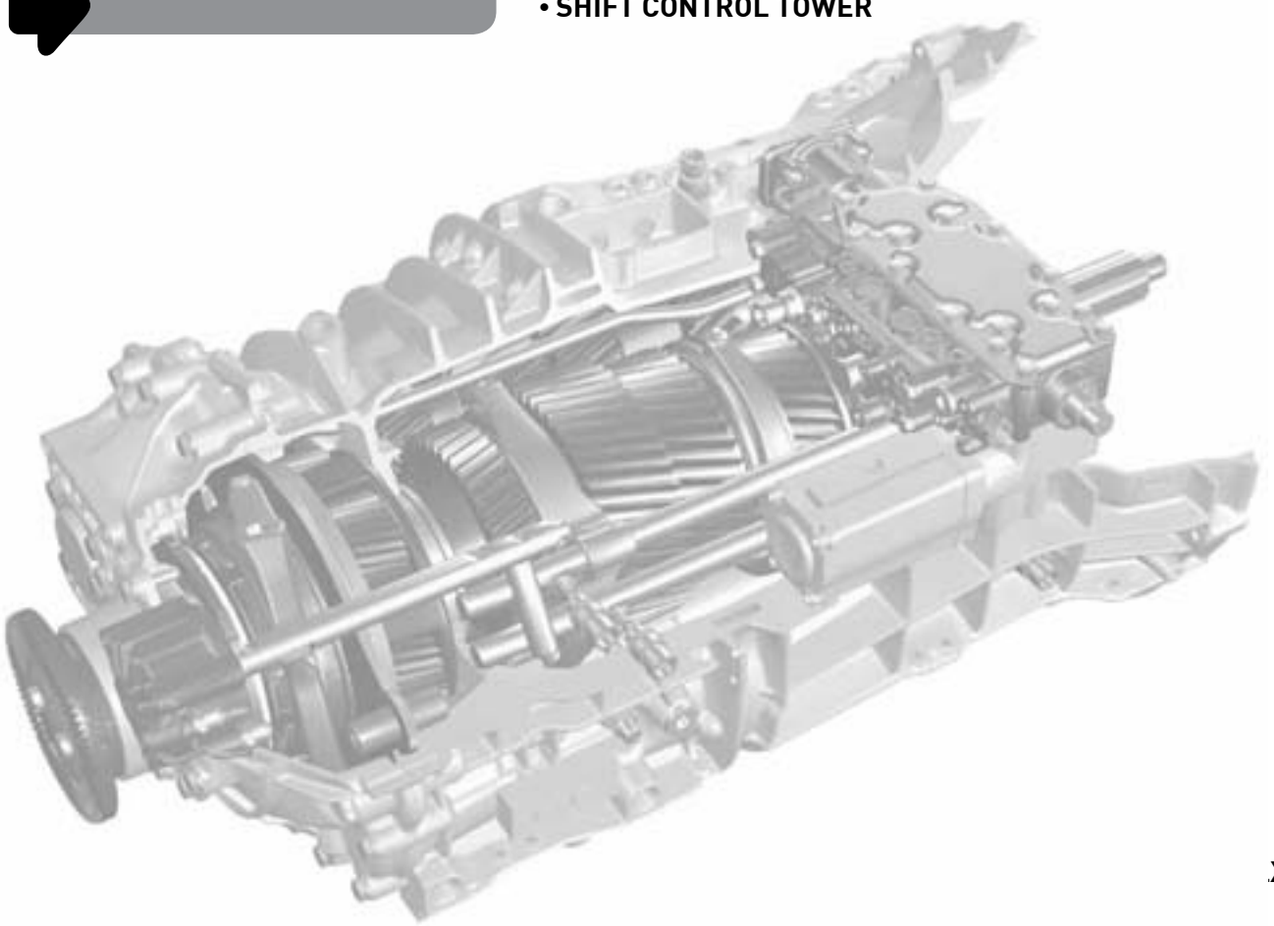

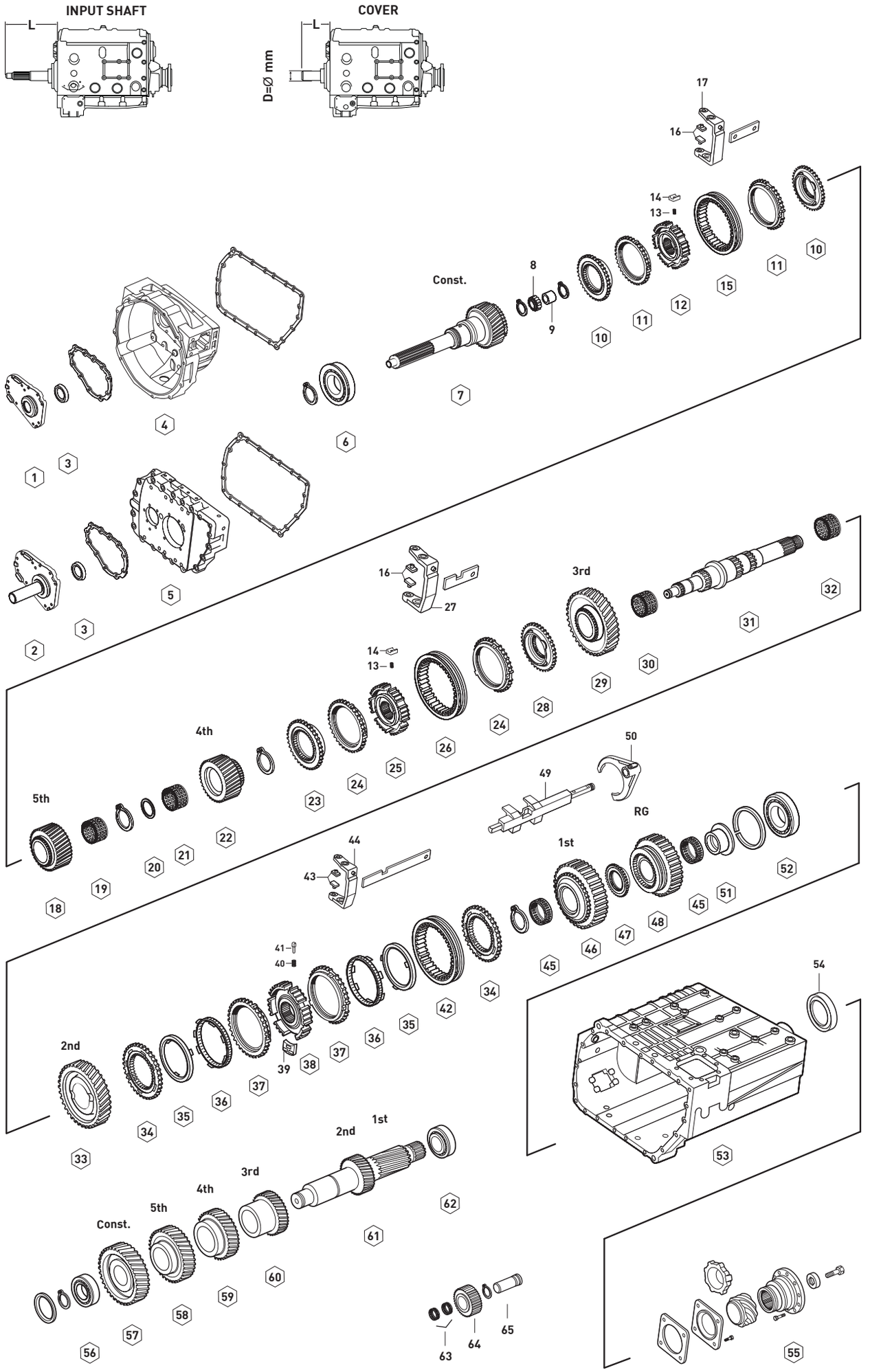

Original parts names, oem numbers, symbols and descriptions used in this catalogue are for reference purposes only.

Fig.	Kacmaz No.	Oem No	Oem Old No	Pcs.	Ürün Tanımı	Description	Sizes	Notes	SG 6.72-0.79	DG 8.50-1.00
1	K20.00673	1290 302 401		1	PRİZDİREK KEÇE KAPAĞI	COVER	D=82 H10 1 1/2	AG	◆	
1		1290 302 430		1	PRİZDİREK KEÇE KAPAĞI	COVER	D=82 H10 1 3/4	B	◆	
2		1290 302 431		1	PRİZDİREK KEÇE KAPAĞI	COVER	L=153 D=47.5	A	◆	
2		1290 302 389		1	PRİZDİREK KEÇE KAPAĞI	COVER	L=136 D=57	CD	◆	
2		1290 302 408		1	PRİZDİREK KEÇE KAPAĞI	COVER	L=190 D=47.5	D		◆
2		1290 302 447		1	PRİZDİREK KEÇE KAPAĞI	COVER	L=185 D=47.6	EF		◆
2	K20.00674	1290 302 437		1	PRİZDİREK KEÇE KAPAĞI	COVER	L=136 D=57	H		◆
3		0750 111 476		1	PRİZDİREK ÖN KEÇE	OIL SEAL	42X62X10mm	ACDEF	◆	◆
3	K20.01001	0750 111 149	(0734 310 161)	1	PRİZDİREK ÖN KEÇE	OIL SEAL	48X65X10mm	BH	◆	◆
3	K20.01027	0750 111 469	(0750 111 268)	1	PRİZDİREK ÖN KEÇE	OIL SEAL	60X74X10mm	G		◆
4		1290 201 227		1	ŞANZIMAN ÖN GÖVDE	HOUSING		A	◆	
4		1290 201 245		1	ŞANZIMAN ÖN GÖVDE	HOUSING		G	◆	
4		1290 201 167		1	ŞANZIMAN ÖN GÖVDE	HOUSING		B	◆	
5		1290 301 176		1	ŞANZIMAN ÖN GÖVDE	HOUSING		ACDEFH	◆	◆
6	K20.01139	0735 330 685		1	PRİZDİREK ÖN BİLYA	ROLLER BEARING	60.0X116.0X28.0mm	ACDEF	◆	◆
6	K20.01140	0735 330 800		1	PRİZDİREK ÖN BİLYA	ROLLER BEARING	55.0X116.0X28.0mm	GH	◆	◆
7		1290 302 478		1	PRİZDİREK	INPUT SHAFT	L=252 SAE 1 1/2	A	◆	
7		1290 302 524	(1290 302 465)	1	PRİZDİREK	INPUT SHAFT	L=252 SAE 1 3/4	B	◆	
7		1290 302 507	(1290 302 482)	1	PRİZDİREK	INPUT SHAFT	L=238 SAE 1 1/2	C	◆	
7		1290 302 480		1	PRİZDİREK	INPUT SHAFT	L=238 SAE 1 1/2	D		◆
7		1290 302 472		1	PRİZDİREK	INPUT SHAFT	L=286 SAE 1 1/2	E		◆
7		1290 302 493		1	PRİZDİREK	INPUT SHAFT	L=286 SAE 1 1/2	F		◆
7	K20.00675	1290 302 511		1	PRİZDİREK	INPUT SHAFT	L=252 SAE 1 1/2	G	◆	
7	K20.00676	1290 302 512		1	PRİZDİREK	INPUT SHAFT	L=238 SAE 1 3/4	H		◆
8	K20.01141	0735 358 128	(0750 115 135)	1	KAMALI MİL UÇ BİLYA	NEEDLE CAGE	31.0X46.0X27.2mm		◆	◆
9	K20.01707	0735 295 119	(0730 161 354)	1	KAMALI MİL UÇ BİLYA BURCU	BUSHING	25.0X31.0X26.0mm		◆	◆
10	K20.00677	1290 304 482	(1290 304 505)	2	PRİZ.VE 5.VİT.SENKROMENÇ	ENGAGING RING			◆	◆
11	K20.00678	1317 304 150		2	PRİZ.VE 5.VİT.FRENLEME	SYNCHRONIZING CONE			◆	◆
12	K20.00679	1317 304 026		1	PRİZ.VE 5.VİT.YILDIZ DİŞLİ	GUIDE SLEEVE		ABCDEF	◆	◆
12	K20.00680	1346 304 118	(1290 304 586)	1	PRİZ.VE 5.VİT.YILDIZ DİŞLİ	GUIDE SLEEVE		GH	◆	◆
13	K20.00681	0732 042 510		6	PRİZ.ve YILDIZ DİŞLİ YAYI	SPRING			◆	◆
14	K20.00682	1317 304 081		6	PRİZ.veYILDIZ DİŞLİ FİŞEĞİ	PRESSURE PIECE			◆	◆
15	K20.00683	1317 304 126		1	PRİZ.VE 5.VİT.SENK.HALKA	ENGAGING SLEEVE			◆	◆
16	K20.00684	1290 306 423		4	5.-3./4.VİT.HİLAL PABUCU	SLIDING PAD			◆	◆
17	K20.00685	1290 206 130		1	PRİZ.VE 5.VİT.HİLALİ	GEAR SHIFT FORK Const./5th			◆	
17	K20.00686	1290 206 132		1	PRİZ.VE 5.VİT.HİLALİ	GEAR SHIFT FORK Const./5th				◆
18	K20.00687	1290 304 547		1	5.VİTES DİŞLİSİ 22 DİŞ	GEAR 5th 22T		ABCG	◆	
18	K20.00688	1290 304 548		1	5.VİTES DİŞLİSİ	GEAR 5th		DEFH		◆
19	K20.01339	0735 321 527		1	5.VİT.MASURA BİLYA	NEEDLE CAGE	44.0X50.0X45.0mm		◆	◆
20	K20.01708	0730 112 265		1	4./5.VİTES ARA PULU	THRUST WASHER	7.00mm		◆	◆
21	K20.01340	0735 321 528		1	4.VİT.MASURA BİLYA	NEEDLE CAGE	60.0X68.0X30.0mm		◆	◆

NOTES :

ABCDEFGH alfabetic letters are used in conjunction with the encoded parts.
Alphabetical Coding has been done according to Input Shaft

NOTLAR :

ABCDEFGH alfabetik harfler ile kodlanan parçalar birlikte kullanılır.
Alfabetik kodlamalar prizdireklere göre yapılmıştır.

Original parts names, oem numbers, symbols and descriptions used in this catalogue are for reference purposes only.

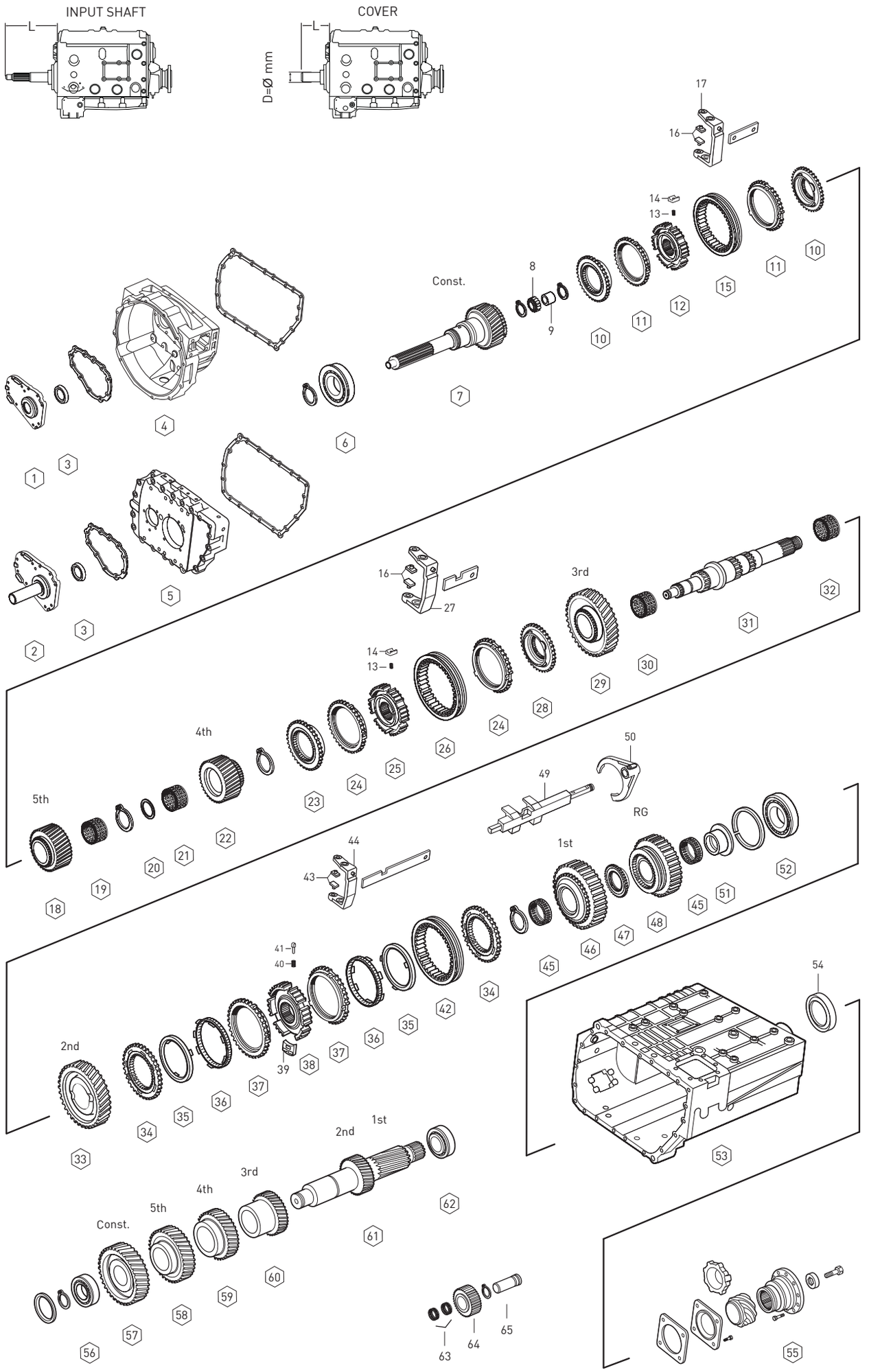

Original parts names, oem numbers, symbols and descriptions used in this catalogue are for reference purposes only.

Fig.	Kacmaz No.	Oem No	Oem Old No	Pcs.	Ürün Tanımı	Description	Sizes	Notes	SG 6.72-0.79	DG 8.50-1.00
22	K20.00689	1290 304 574		1	4.VİTES DİŞLİSİ 23 DİŞ	GEAR 4th 23T			◆	◆
23	K20.00690	1290 304 508		1	4.VİT.SENKROMENÇ	ENGAGING RING			◆	◆
24	K20.00691	1317 304 114	(1317 304 149)	2	3./4.VİT.FRENLEME	SYNCHRONIZING CONE			◆	◆
25	K20.00692	1317 304 031		1	3./4.VİT.YILDIZ DİŞLİ	GUIDE SLEEVE			◆	◆
26	K20.00693	1317 304 125		1	3./4.VİT.SENK.HALKA	ENGAGING SLEEVE			◆	◆
27	K20.00694	1290 206 128		1	3./4.VİTES HİLALİ	GEAR SHIFT FORK 3rd/4th			◆	◆
28	K20.00695	1290 304 509		1	3.VİT.SENKROMENÇ	ENGAGING RING			◆	◆
29	K20.00696	1290 304 581		1	3.VİTES DİŞLİSİ 25 DİŞ	GEAR 3rd 25T			◆	◆
30	K20.01341	0735 321 529		1	3.VİT.MASURA BİLYA	NEEDLE CAGE	75.0X83.0X40.0mm		◆	◆
31	K20.00697	1290 304 571		1	KAMALI MİL	MAIN SHAFT		ABCDEF	◆	◆
31	K20.00698	1290 304 620	(1290 304 587)	1	KAMALI MİL	MAIN SHAFT		GH	◆	◆
32	K20.01342	0735 321 530		1	2.VİT.MASURA BİLYA	NEEDLE CAGE	75.0X83.0X35.0mm		◆	◆
33	K20.00699	1290 304 487		1	2.VİTES DİŞLİSİ 33 DİŞ	GEAR 2nd 33T		ABCG	◆	◆
33	K20.00700	1290 304 485		1	2.VİTES DİŞLİSİ	GEAR 2nd		DEFH		◆
34	K20.00701	1304 304 623	(1304 304 649)	2	1./2.VİT.SENKROMENÇ	ENGAGING RING			◆	◆
35	K20.00702	1290 304 350		2	1./2.VİT.SENK.FRENLEME	SYNCHRONIZING CONE			◆	◆
36	K20.00703	1290 304 366		2	1./2.VİT.SENK.FRENLEME	INTERMEDIATE CONE			◆	◆
37	K20.00704	1290 304 438	(1290 304 356)	2	1./2.VİT.SENK.FRENLEME	SYNCHRONIZING CONE			◆	◆
38	K20.00705	1304 304 687	(1304 304 645)	1	1./2.VİT.YILDIZ DİŞLİ	GUIDE SLEEVE			◆	◆
39	K20.00209	1312 304 159		3	1./2.VİT.YILDIZ DİŞ.BAKLASI	SLIDING BLOCK			◆	◆
40	K20.00110	0732 040 409		3	1./2.VİT.YILDIZ DİŞLİ YAYI	SPRING			◆	◆
41	K20.00111	1297 304 436		3	1./2.VİT.YILDIZ DİŞLİ FİŞEĞİ	PRESSURE PIECE			◆	◆
42	K20.00706	6002 305 994	(1290 304 440)	1	1./2.VİT.SENK.HALKA	ENGAGING SLEEVE			◆	◆
43	K20.00707	1290 306 439		2	1./2.VİTES HİLAL PABUCU	SLIDING PAD			◆	◆
44	K20.00708	1290 306 494	(1290 306 429)	1	1./2.VİTES HİLALİ	GEAR SHIFT FORK 1st/2nd			◆	◆
45	K20.01343	0735 321 531		2	1.VE GERİ VİT.MASURA BİLYA	NEEDLE CAGE	68.0X76.0X35.0mm		◆	◆
46	K20.00709	1290 304 572		1	1.VİTES DİŞLİSİ 39 DİŞ	GEAR 1st 39T			◆	◆
47	K20.00710	1290 304 573		1	GERİ VİT.YILDIZ DİŞLİ 20 DİŞ	HUB 20T			◆	◆
48	K20.00711	1290 304 058	(1290 304 371)	1	GERİ VİTES DİŞLİSİ 35 DİŞ	REVERSE GEAR 35T			◆	◆
49	K20.00712	1290 206 164		1	GERİ VİTES HİLAL MİLİ	GEAR SHIFT RAIL			◆	◆
50	K20.00713	1290 306 295	(1290 306 078)	1	GERİ VİTES HİLALİ	GEAR SHIFT FORK / RG			◆	◆
51	K20.00714	1290 304 056		1	GERİ VİT.MAS.BİLYA ÇANAĞI	BEARING RACE			◆	◆
52	K20.01142	0750 116 373	(0735 330 615)	1	KAMALI MİL ARKA BİLYA	ROLLER BEARING	45.0X100.0X25.0mm		◆	◆
53		1290 201 211		1	ŞANZIMAN ORTA GÖVDE	HOUSING		A	◆	
53		1290 201 207		1	ŞANZIMAN ORTA GÖVDE	HOUSING		B	◆	
53		1290 201 191	(1290 201 180)	1	ŞANZIMAN ORTA GÖVDE	HOUSING		CDEF	◆	◆
53		1290 201 253		1	ŞANZIMAN ORTA GÖVDE	HOUSING		G	◆	
53		1290 201 256		1	ŞANZIMAN ÖN GÖVDE	HOUSING		H		◆
54	K20.01027	0750 111 469	(0750 111 268)	1	ŞANZ.ARKA GÖVDE KEÇESİ	OIL SEAL	60.0X74.0X10.0mm		◆	◆
55	K20.00790	1290 304 599		1	ŞANZIMAN FLANŞI	COMPANION FLANGE	4-H, Ø150mm	ACDG	◆	◆
55	K20.00791	1290 304 580		1	ŞANZIMAN FLANŞI	COMPANION FLANGE	8-H, Ø150mm	B	◆	

NOTES :

ABCDEFGH alfabetic letters are used in conjunction with the encoded parts.
Alphabetical Coding has been done according to Input Shaft

NOTLAR :

ABCDEFGH alfabetik harfler ile kodlanan parçalar birlikte kullanılır.
Alfabetik kodlamalar prizdireklere göre yapılmıştır.

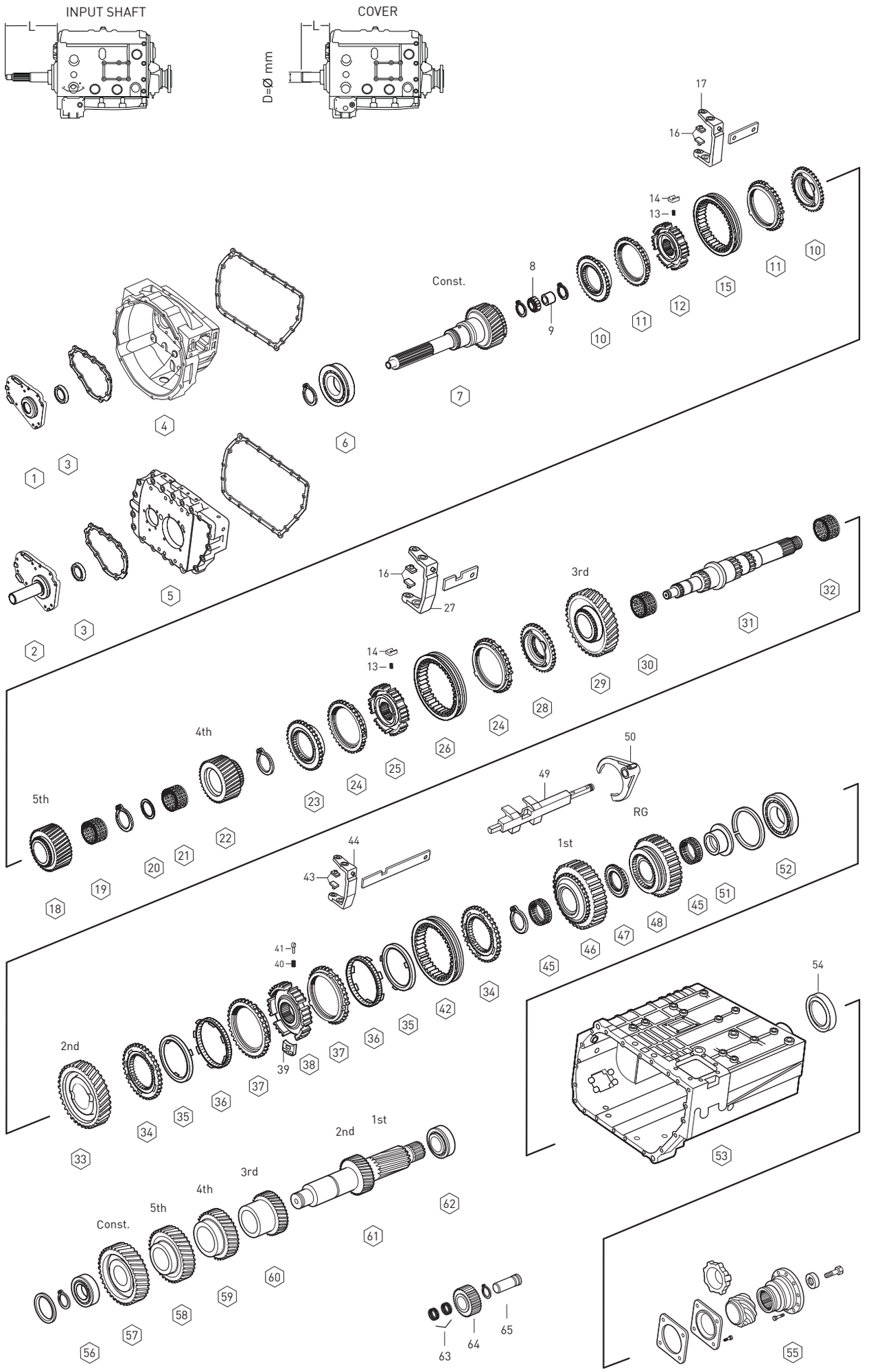

Original parts names, oem numbers, symbols and descriptions used in this catalogue are for reference purposes only.

Fig.	Kacmaz No.	Oem No	Oem Old No	Pcs.	Ürün Tanımı	Description	Sizes	Notes	SG 6.72-0.79	DG 8.50-1.00
55	K20.00792	1290 304 475	(1290 304 598)	1	ŞANZIMAN FLANŞI	COMPANION FLANGE	8-H, Ø175mm	EFH		◆
56	K20.01143	0735 371 607	(0750 117 199)	1	GRUP MİLİ ÖN BİLYA	ROLLER BEARING	40.0X80.0X21.0mm		◆	◆
57	K20.00715	1290 303 200		1	PRİZDİREK KARŞ.36 DİŞ	CONST.GEAR 36 T		ABCG	◆	
57	K20.00716	1290 303 203		1	PRİZDİREK KARŞ.	CONST.GEAR		DEFH		◆
58	K20.00717	1290 303 199		1	5.VİTES DİŞLİ KARŞ.53 DİŞ	GEAR 5th 53 T		ABCG	◆	
58	K20.00718	1290 303 224	(1290 303 204)	1	5.VİTES DİŞLİ KARŞ.	GEAR 5th		DEFH		◆
59	K20.00719	1290 303 198		1	4.VİTES DİŞLİ KARŞ.31 DİŞ	GEAR 4th 31 T			◆	◆
60	K20.00720	1290 303 197		1	3.VİTES DİŞLİ KARŞ.22 DİŞ	GEAR 3rd 22 T		ABCG	◆	
60	K20.00721	1290 303 202		1	3.VİTES DİŞLİ KARŞ.	GEAR 3rd		DEFH		◆
61	K20.00722	1290 203 039	(1290 303 192)	1	GRUP MİLİ 11/17 DİŞ	COUNTER SHAFT 11/17 T		ABCG	◆	
61	K20.00723	1290 203 042		1	GRUP MİLİ 11/17 DİŞ	COUNTER SHAFT 11/17 T		DEFH		◆
62	K20.01144	0735 370 438		1	GRUP MİLİ ARKA BİLYA	ROLLER BEARING	39.6X76.2X23.8mm		◆	◆
63	K20.01344	0635 300 110		2	KÜÇÜK GERİ VİT.MAS.BİLYA	NEEDLE CAGE	28.0X35.0X18.0mm		◆	◆
64	K20.00724	1290 305 034	(1290 305 031)	1	KÜÇÜK GERİ VİTES 20 DİŞ	REV.IDLER GEAR 20T			◆	◆
			(1290 305 029)							
			(1290 305 026)							
			(1290 305 023)							
65	K20.00725	1290 305 028	(1290 305 022)	1	KÜÇÜK GERİ VİTES PİMİ	PIN			◆	◆

NOTES :

ABCDEFGH alfabetic letters are used in conjunction with the encoded parts.
Alphabetical Coding has been done according to Input Shaft

NOTLAR :

ABCDEFGH alfabetik harfler ile kodlanan parçalar birlikte kullanılır.
Alfabetik kodlamalar prizdireklere göre yapılmıştır.

Original parts names, oem numbers, symbols and descriptions used in this catalogue are for reference purposes only.

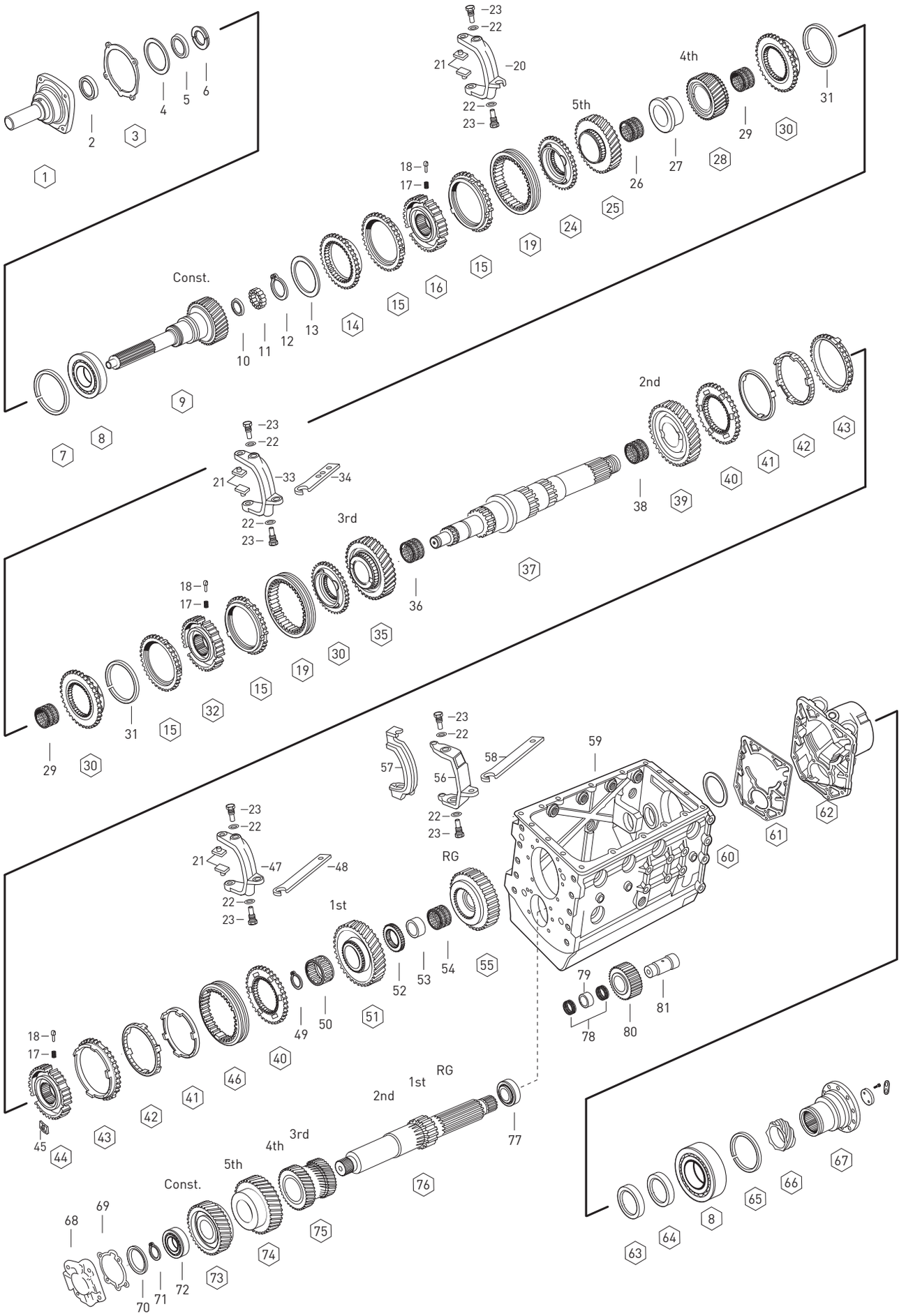

Original parts names, oem numbers, symbols and descriptions used in this catalogue are for reference purposes only.

Fig.	Kacmaz No.	Oem No	Oem Old No	Pcs.	Ürün Tanımı	Description	Sizes	(X1) :1268 008 605	(X2) :1268 008 607	(X3) :1268 008 624
1		0091 302 098		1	PRİZDİREK KEÇE KAPAĞI	COVER		◆		
1		0091 302 111		1	PRİZDİREK KEÇE KAPAĞI	COVER			◆	
1		0091 302 108		1	PRİZDİREK KEÇE KAPAĞI	COVER				◆
2		0734 310 111		1	PRİZDİREK KEÇESİ	OIL SEAL	55.0X75.0X8.0mm	◆	◆	
2		0734 310 108		1	PRİZDİREK KEÇESİ	OIL SEAL	48.0X69.0X10.0mm			◆
3		1250 302 478		1	PRİZ.KEÇE KAPAK CONTASI	GASKET		◆	◆	◆
4		1205 308 016		1	PRİZDİREK PULU	THRUST WASHER	0.20mm	◆	◆	◆
4		1205 308 020		1	PRİZDİREK PULU	THRUST WASHER	0.30mm	◆	◆	◆
5		0730 361 046		1	EMNİYET SACI	SPACER RING		◆	◆	◆
6		0730 102 632		2	PARÇALI KİLİT	SPLIT RING	6.70mm	◆	◆	◆
6		0730 103 510		2	PARÇALI KİLİT	SPLIT RING	7.20mm	◆	◆	◆
7	K20.02121	0630 503 020		2	PRİZ.ÖN BİLYA KİLİT SEGMANI	LOCK RING		◆	◆	◆
8	K20.01161	0750 118 082		2	PRİZ.ÖN VE ARKA KUTU BİLYASI	ROLLER BEARING	70.0X150.0X35.0mm	◆	◆	◆
9	K20.01807	0091 302 097		1	PRİZDİREK 28 DİŞ	INPUT SHAFT 28 T		◆		
9	K20.01898	0091 302 110		1	PRİZDİREK 28 DİŞ	INPUT SHAFT 28 T			◆	
9	K20.01899	1268 302 175		1	PRİZDİREK 28 DİŞ	INPUT SHAFT 28 T				◆
10		0630 501 024		1	PRİZDİREK MASURA BİLA PULU	SEEGER RING	1.50mm	◆	◆	◆
11	K20.01153	0735 455 012		1	PRİZDİREK MASURA BİLYA	NEEDLE CAGE	30.0X68.0X26.0mm	◆	◆	◆
12		0630 501 195		1	PRİZ.MASURA BİLYA SEGMANI	RETAINING RING	2.80mm	◆	◆	◆
13		0730 002 684		1	PRİZDİREK RAYNELİ	SHIM	3.00mm	◆	◆	◆
14	K20.01900	0091 302 152		1	PRİZDİREK SENKROMENÇ	ENGAGING RING		◆	◆	◆
15	K20.00781	1268 304 594	(1268 304 445)	4	PRİZ./5./4./3.VİT.SENK.FRENLEME	SYNCHRONIZING CONE		◆	◆	◆
16	K20.01901	1268 304 554	(0091 304 204)	1	PRİZ.-5.VİT.YILDIZ DİŞLİ	GUIDE SLEEVE		◆	◆	◆
17	K20.00110	0732 040 409		3	PRİZ./5./4./3.VİT.YIL.DİŞLİ YAYI	SPRING		◆	◆	◆
18	K20.00111	1297 304 436		3	PRİZ./5./4./3.VİT.YIL.DİŞLİ FİŞEĞİ	PRESSURE PIECE		◆	◆	◆
19	K20.00255	1324 304 053	(1304 304 597)	2	PRİZ./5./4./3.VİT.SENK.HALKA	ENGAGING SLEEVE		◆	◆	◆
			(1304 304 541)					◆	◆	◆
20		1250 306 262		1	4./5.VİTES HİLALİ	G.SHIFT FORK 4th/5th		◆	◆	◆
21		1268 306 101		6	HİLAL PABUCU	SLIDING PAD		◆	◆	◆
22		0730 300 005		8	HİLAL VİDA PULU	WASHER		◆	◆	◆
23		1252 306 077		8	HİLAL VİDASI	SCREW		◆	◆	◆
24	K20.01811	0091 304 202		1	5.VİTES SENK.FRENLEME	SYNCHRONIZING CONE		◆	◆	◆
25	K20.01902	1268 304 559		1	5.VİTES DİŞLİSİ 31 DİŞ	GEAR 5th 31 T		◆	◆	◆
26		0735 320 837		1	5.VİTES DİŞLİSİ MASURA BİLYA	NEEDLE CAGE		◆	◆	◆
27		1268 304 562		1	4.VİTES DİŞLİ BURCU	BUSHING		◆	◆	◆
28	K20.01903	0091 304 054		1	4.VİTES DİŞLİSİ 31 DİŞ	GEAR 4th 31 T		◆	◆	◆
29	K20.01471	0750 115 134	(0735 320 407)	1	4.VİTES DİŞLİSİ MASURA BİLYA	NEEDLE CAGE	58.0X65.0X36.0mm	◆	◆	◆
30	K20.01812	0091 304 062		2	3./4.VİTES SENK.FRENLEME	SYNCHRONIZING CONE		◆	◆	◆
31		0630 501 181		1	3./4.VİTES YILDIZ DİŞLİ SEK.	SEEGER RING	2.40mm	◆	◆	◆
31		0630 501 153		1	3./4.VİTES YILDIZ DİŞLİ SEK.	SEEGER RING	2.70mm	◆	◆	◆
32	K20.01904	1268 304 555		1	3./4.VİTES YILDIZ DİŞLİ	GUIDE SLEEVE		◆	◆	◆

NOTES :

X1,X2,X3 are used in conjunction with the encoded parts.

NOTLAR :

X1,X2,X3 ile kodlanan parçalar birlikte kullanılır.

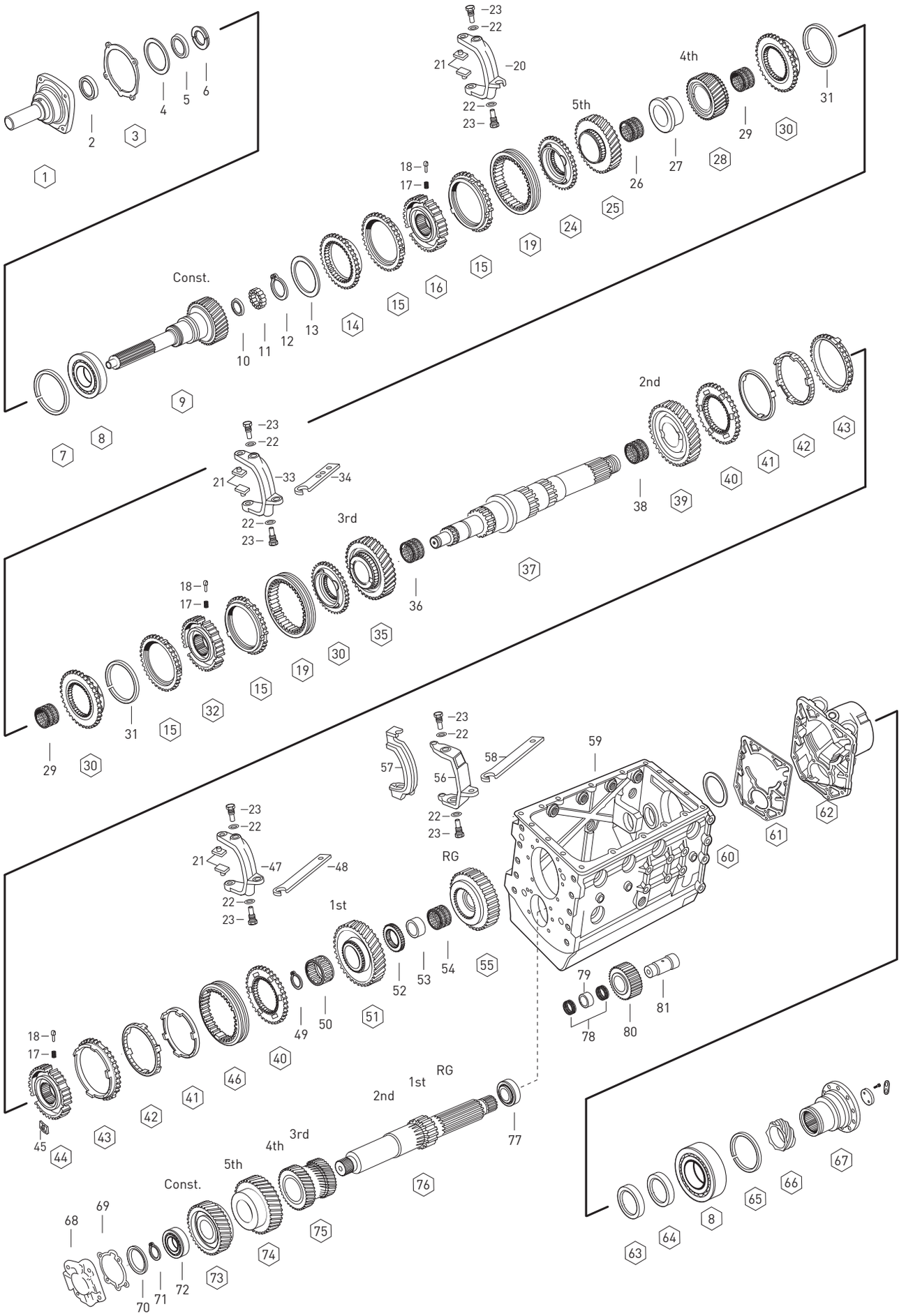

Original parts names, oem numbers, symbols and descriptions used in this catalogue are for reference purposes only.

Fig.	Kacmaz No.	Oem No	Oem Old No	Pcs.	Ürün Tanımı	Description	Sizes	(X1) : 1268 008 605	(X2) : 1268 008 607	(X3) : 1268 008 624
33		1246 206 011		1	2./3.VİTES HİLALİ	G.SHIFT FORK 2nd/3rd		◆	◆	◆
34		1240 306 229		1	2./3.VİTES HİLAL ÇITASI	SELECTOR ROD		◆	◆	◆
35	K20.01798	0091 304 061		1	3.VİTES DİŞLİSİ 35 DİŞ	GEAR 3rd 35 T		◆	◆	◆
36		0735 320 471		1	3.VİTES DİŞLİSİ MASURA BİLYA	NEEDLE CAGE		◆	◆	◆
37	K20.01802	0091 304 328	(1268 304 553)	1	KAMALI MİL	MAIN SHAFT		◆	◆	◆
38	K20.01311	0735 320 786	(0735 320 584)	1	2.VİTES DİŞLİSİ MASURA BİLYA	NEEDLE CAGE	88.0X96.0X24.5mm	◆	◆	◆
			(0501 398 351)							
39	K20.01905	0091 304 338	(1268 304 566)	1	2.VİTES DİŞLİSİ 42 DİŞ	GEAR 2nd 42 T		◆		◆
39	K20.01906	1268 304 175		1	2.VİTES DİŞLİSİ	GEAR 2nd			◆	
40	K20.00143	1312 304 106		2	1./2.VİTES SENKROMENÇ	ENGAGING RING		◆	◆	◆
41	K20.00144	1268 304 424		2	1./2.VİTES SENK.FRENLEME	SYNCHRONIZING CONE		◆	◆	◆
42	K20.00302	1268 304 494	(1268 304 491)	2	1./2.VİTES SENK.FRENLEME	INTERMEDIATE CONE		◆	◆	◆
43	K20.00145	1268 304 525		2	1./2.VİTES SENK.FRENLEME	SYNCHRONIZING CONE		◆	◆	◆
44	K20.01908	1268 304 557		1	1./2.VİTES YILDIZ DİŞLİ	GUIDE SLEEVE		◆	◆	◆
45	K20.00209	1312 304 159		3	1./2.VİTES YILDIZ DİŞLİ BAKLASI	SLIDING BLOCK		◆	◆	◆
46	K20.00147	1310 304 175	(1312 304 157)	1	1./2.VİTES SENK.HALKA	ENGAGING SLEEVE		◆	◆	◆
47		0091 206 005		1	1.VİTES HİLALİ	G.SHIFT FORK 1st		◆	◆	◆
48		1268 306 096		1	1.VİTES HİLAL ÇITASI	SELECTOR ROD		◆	◆	◆
49		0630 501 515		1	1.VİTES MASURA BİLYA SEK.	RETAINING RING	3.40mm	◆	◆	◆
49		0630 501 338		1	1.VİTES MASURA BİLYA SEK.	RETAINING RING	3.60mm	◆	◆	◆
50		0750 115 283		1	1.VİTES MASURA BİLYA	NEEDLE CAGE	80.0X88.0X46.0mm	◆	◆	◆
51	K20.01907	1268 304 568		1	1.VİTES DİŞLİSİ 51 DİŞ	GEAR 1st 51 T		◆	◆	◆
52	K20.02017	1250 304 006		1	GERİ VİTES YILDIZ DİŞLİ	HUB		◆	◆	◆
53	K20.02066	0730 160 344		1	GERİ VİT.MAS.BİLYA ÇANAĞI	BEARING RACE		◆	◆	◆
54		0735 320 154		1	GERİ VİTES MASURA BİLYA	NEEDLE CAGE	84.0X96.0X36.5mm	◆	◆	◆
55	K20.01909	1268 304 008		1	GERİ VİTES DİŞLİSİ 47 DİŞ	REVERSE GEAR 47 T		◆	◆	◆
56		1246 206 008		1	GERİ VİTES HİLALİ	G.SHIFT FORK RG		◆	◆	◆
57		1268 306 035		1	GERİ VİTES HİLAL ARA PARÇA	SLIDING FORK		◆	◆	◆
58		1240 306 214		1	GERİ VİTES HİLAL ÇITASI	SELECTOR ROD		◆		◆
58		0091 306 036		1	GERİ VİTES HİLAL ÇITASI	SELECTOR ROD			◆	
59		0091 301 036		1	ŞANZIMAN ORTA GÖVDE	HOUSING		◆	◆	◆
60		0730 002 672		1	ARKA GÖVDE RAYNELİ	SHIM	1.00mm	◆	◆	◆
60		0730 002 665		1	ARKA GÖVDE RAYNELİ	SHIM	1.70mm	◆	◆	◆
61		1268 308 020		1	ARKA GÖVDE CONTASI	GASKET		◆	◆	◆
62		0091 308 004		1	ŞANZIMAN ARKA GÖVDE	REAR HOUSING		◆		◆
62		0091 308 044		1	ŞANZIMAN ARKA GÖVDE	REAR HOUSING			◆	
63		0734 310 109		1	ŞANZ.ARKA GÖVDE BİL.KEÇESİ	OIL SEAL	85.0X105.0X10.0mm	◆	◆	◆
64	K20.02075	0750 110 074	(0634 300 712)	1	ŞANZ.ARKA GÖVDE BİL.KEÇESİ	OIL SEAL	85.0X105.0X10.0mm	◆	◆	◆
65	K20.02121	0630 503 020		1	ŞANZ.ARKA GÖVDE BİL.KİLİT SEK.	LOCK RING		◆	◆	◆
66		1250 304 198		1	ŞANZIMAN KM DİŞLİSİ	GEAR		◆	◆	◆
67	K20.02062	1269 338 020		1	ŞANZIMAN FLANŞI	COMPANION FLANGE	10-H, Ø180mm	◆		

NOTES :

X1,X2,X3 are used in conjunction with the encoded parts.

NOTLAR :

X1,X2,X3 ile kodlanan parçalar birlikte kullanılır.

Original parts names, oem numbers, symbols and descriptions used in this catalogue are for reference purposes only.

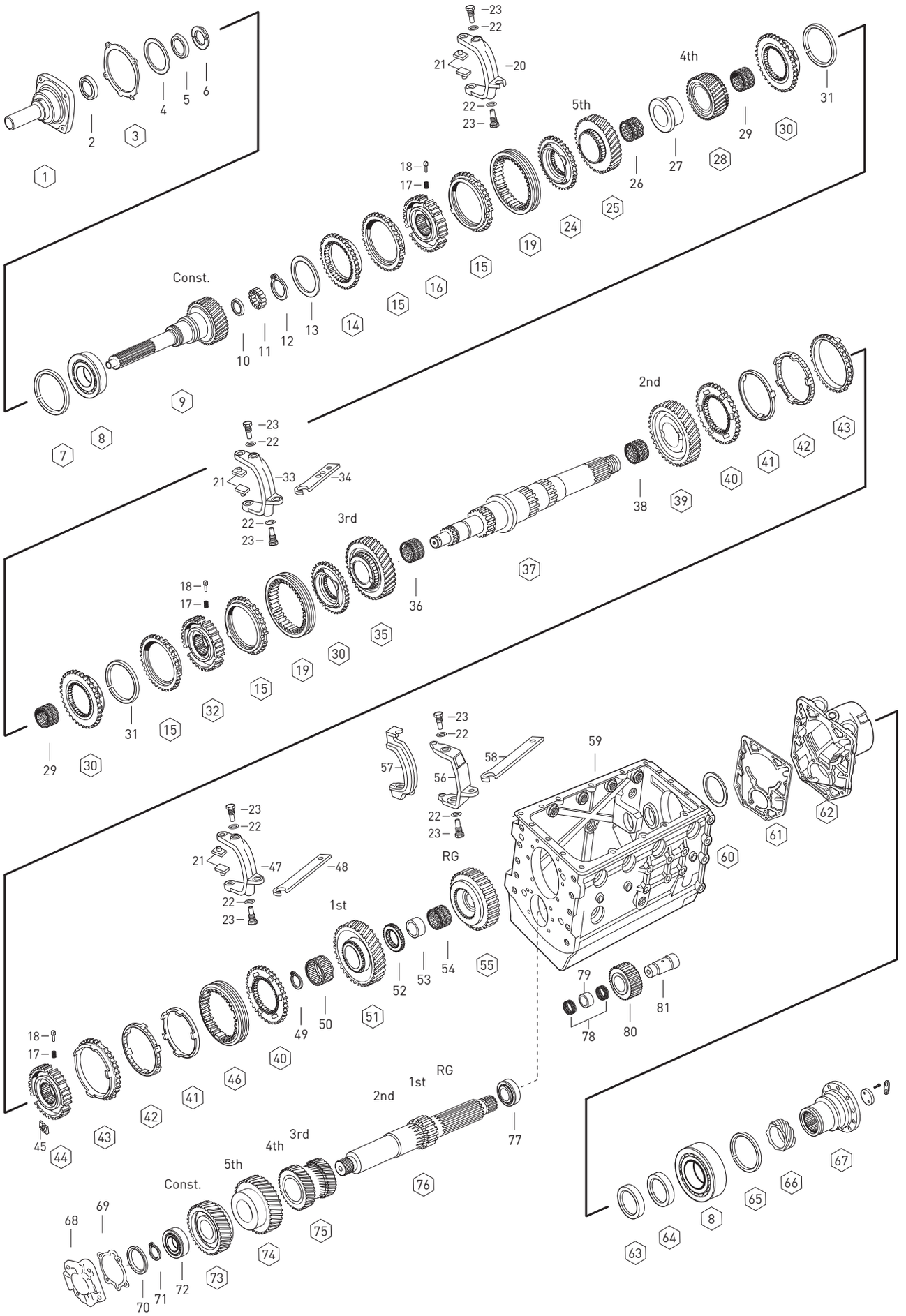

Original parts names, oem numbers, symbols and descriptions used in this catalogue are for reference purposes only.

Fig.	Kacmaz No.	Oem No	Oem Old No	Pcs.	Ürün Tanımı	Description	Sizes	(X1) :1268 008 605	(X2) :1268 008 607	(X3) :1268 008 624
67		0091 204 015		1	ŞANZIMAN FLANŞI	COMPANION FLANGE			◆	
67		1268 304 136		1	ŞANZIMAN FLANŞI	COMPANION FLANGE	8-H, Ø150mm			◆
68		1268 303 066		1	KAPAK	COVER		◆	◆	◆
69		1268 303 132		1	KAPAK CONTASI	GASKET		◆	◆	◆
70		0730 103 124		1	GRUP MİLİ ÖN BİLYA RAYNELİ	SHIM	3.60mm	◆	◆	◆
71		0630 501 147		1	GRUP MİLİ ÖN BİLYA SEGMANI	RETAINING RING	2.30mm	◆	◆	◆
71		0630 501 151		1	GRUP MİLİ ÖN BİLYA SEGMANI	RETAINING RING	3.20mm	◆	◆	◆
72	K20.01124	0750 117 010	(0750 117 030)	1	GRUP MİLİ ÖN BİLYA	ROLLER BEARING		◆	◆	◆
73	K20.01808	1268 303 140		1	TAKVİYE DİŞLİ KARŞILIĞI 46 DİŞ	CONSTANT GEAR 46 T		◆	◆	◆
74	K20.01800	0091 303 030		1	5.VİTES DİŞLİ KARŞILIĞI 39 DİŞ	GEAR 5th 39 T		◆	◆	◆
75	K20.01910	0091 303 031		1	3./4.VİTES DİŞLİ KARŞILIĞI 27/21 DİŞ	DOUBLE GEAR 3rd/4th 27/21 T		◆	◆	◆
76	K20.01801	0091 303 136	(1268 303 138)	1	GRUP MİLİ	COUNTER SHAFT		◆		◆
76	K20.01911	0091 303 080		1	GRUP MİLİ	COUNTER SHAFT			◆	
77	K20.01470	0735 117 778	(0635 374 019)	1	GRUP MİLİ ARKA BİLYA	ROLLER BEARING	45.0X100.0X38.25mm	◆	◆	◆
78		0735 320 492		1	KÜÇÜK GERİ VİTES MASURA BİLYA	NEEDLE CAGE	45.0X53.0X21.0mm	◆	◆	◆
79		1250 305 006		1	KÜÇÜK GERİ VİT.MAS.BİLYA ÇANAĞI	BEARING RACE		◆	◆	◆
80	K20.01912	1268 305 009		1	KÜÇÜK GERİ VİTES 20 DİŞ	REV.IDLER GEAR 20 T		◆	◆	◆
81	K20.02077	1250 305 003		1	KÜÇÜK GERİ VİTES PİMİ	PIN		◆	◆	◆

NOTES :

X1,X2,X3 are used in conjunction with the encoded parts.

NOTLAR :

X1,X2,X3 ile kodlanan parçalar birlikte kullanılır.

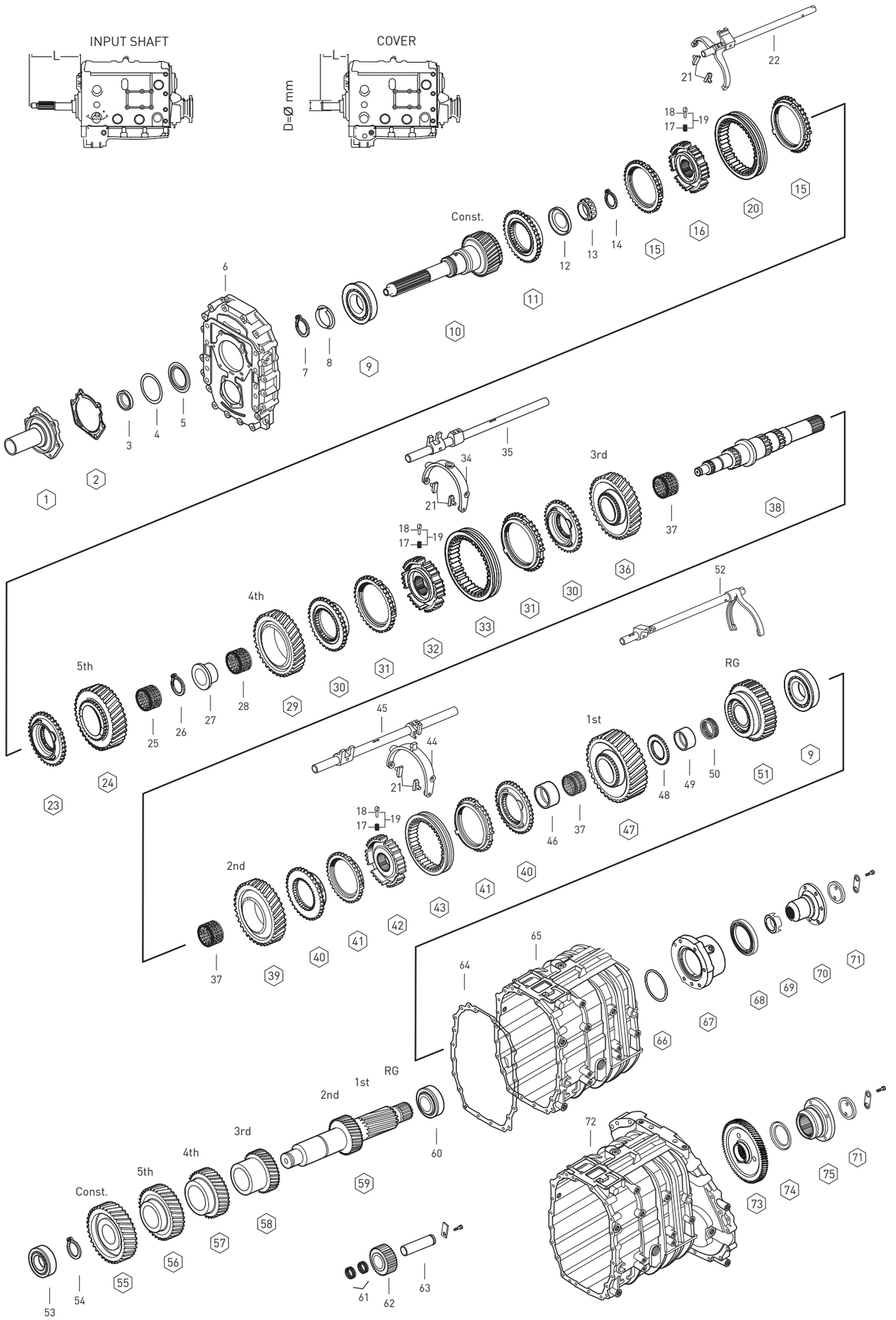

Original parts names, oem numbers, symbols and descriptions used in this catalogue are for reference purposes only.

Fig.	Kacmaz No.	Oem No	Oem Old No	Pcs.	Ürün Tanımı	Description	Sizes	(X1): 6 S 1600 BD	(X2): 6 S 1601 BD IT	(X3): 6 S 1600-1700-1900 BO	(X4): 6 S 1701-1901 BO IT
1		1310 302 075		1	PRİZDİREK KEÇE KAPAĞI	COVER		◆	◆	◆	◆
2		0501 317 402		1	PRİZ.KEÇE KAPAK CONTASI	GASKET		◆	◆	◆	◆
3	K20.01003	0734 310 387	(0734 310 386)	1	PRİZDİREK ÖN KEÇE	OIL SEAL	55x75x8mm	◆	◆	◆	◆
4		0730 002 660		1	PRİZDİREK ÖN BİLYA PULU	THRUST WASHER	1.20mm	◆	◆	◆	◆
4		0730 002 659		1	PRİZDİREK ÖN BİLYA PULU	THRUST WASHER	1.30mm	◆	◆	◆	◆
4		0730 002 658		1	PRİZDİREK ÖN BİLYA PULU	THRUST WASHER	1.40mm	◆	◆	◆	◆
4	K20.01724	0730 002 657		1	PRİZDİREK ÖN BİLYA PULU	THRUST WASHER	1.50mm	◆	◆	◆	◆
4		0730 002 656		1	PRİZDİREK ÖN BİLYA PULU	THRUST WASHER	1.60mm	◆	◆	◆	◆
4		0730 002 655		1	PRİZDİREK ÖN BİLYA PULU	THRUST WASHER	1.70mm	◆	◆	◆	◆
4		0730 002 654		1	PRİZDİREK ÖN BİLYA PULU	THRUST WASHER	1.80mm	◆	◆	◆	◆
4		0730 006 179		1	PRİZDİREK ÖN BİLYA PULU	THRUST WASHER	1.95mm	◆	◆	◆	◆
4		0730 006 180		1	PRİZDİREK ÖN BİLYA PULU	THRUST WASHER	2.00mm	◆	◆	◆	◆
4		0730 005 857		1	PRİZDİREK ÖN BİLYA PULU	THRUST WASHER	2.30mm	◆	◆	◆	◆
4		0730 008 568		1	PRİZDİREK ÖN BİLYA PULU	THRUST WASHER	2.50mm	◆	◆	◆	◆
4		0730 008 576		1	PRİZDİREK ÖN BİLYA PULU	THRUST WASHER	2.90mm	◆	◆	◆	◆
5		1310 302 102		1	YAĞLAMA SACI	RING		◆	◆	◆	◆
6	K20.00938	1310 201 044	(1310 201 045)	1	ŞANZIMAN ÖN GÖVDE	HOUSING		◆	◆	◆	◆
7		0630 513 015		1	PRİZDİREK ÖN BİLYA SEGMANI	RETAINING RING		◆	◆	◆	◆
8		1310 202 001		1	PRİZDİREK YAĞLAMA PİPETİ	RING		◆	◆	◆	◆
9	K20.01151	0750 117 518		2	PRİZ.ÖN VE K.MİL ARKA BİLYA	ROLLER BEARING	71.40x120.0x32.50mm	◆	◆	◆	◆
10	K20.01913	1310 302 088		1	PRİZDİREK 27 DİŞ	INPUT SHAFT 27 T		◆	◆		
10	K20.00956	1310 302 092		1	PRİZDİREK 27 DİŞ	INPUT SHAFT 27 T		◆	◆		
10	K20.00947	1310 302 089		1	PRİZDİREK 31 DİŞ	INPUT SHAFT 31 T				◆	◆
11	K20.10003	1310 302 045	(1310 304 160)	1	PRZİDİREK SENKROMENÇ	ENGAGING RING		◆	◆	◆	◆
12	K20.01068	0501 315 236		1	PRİZDİREK KIL KEÇE	DIAPHRAGM		◆	◆	◆	◆
13	K20.01109	0750 117 232	(0735 371 563)	1	KAMALI MİL UÇ BİLYA	NEEDLE BEARING	42.0x40.30mm	◆	◆	◆	◆
14	K20.02139	0630 501 069		1	KAMALI MİL UÇ BİLYA SEK.	RETAINING RING	2.20mm	◆	◆	◆	◆
14		0630 501 068		1	KAMALI MİL UÇ BİLYA SEK.	RETAINING RING	2.30mm	◆	◆	◆	◆
14		0630 501 067		1	KAMALI MİL UÇ BİLYA SEK.	RETAINING RING	2.40mm	◆	◆	◆	◆
14		0630 531 141		1	KAMALI MİL UÇ BİLYA SEK.	RETAINING RING	2.50mm	◆	◆	◆	◆
15	K20.00781	1268 304 594	(1268 304 445)	2	5./6.VİTES SENK.FRENLEME	SYNCHRONIZING CONE		◆	◆	◆	◆
16	K20.00943	1310 304 158		1	5./6.VİTES SENK.YILDIZ DİŞLİ	GUIDE SLEEVE		◆	◆	◆	◆
17	K20.00110	0732 040 409		9	YILDIZ DİŞLİ YAYI	SPRING		◆	◆	◆	◆
18	K20.00111	1297 304 436		9	YILDIZ DİŞLİ FİŞEĞİ	PRESSURE PIECE		◆	◆	◆	◆
19	K20.01745	1295 298 956		kit	YILDIZ DİŞLİ YAY FİŞEK TAKIMI	REPAIR KIT		◆	◆	◆	◆
20	K20.00951	1310 304 195		1	5./6.VİTES SENK.HALKA	ENGAGING SLEEVE		◆	◆	◆	◆
21	K20.00169	1290 306 066		6	HİLAL PABUCU	SLIDING PAD		◆	◆	◆	◆
22		1310 206 085		1	5./6.VİTES HİLALİ	GEAR SHIFT FORK 5th/6th		◆	◆		
22		1310 206 081		1	5./6.VİTES HİLALİ	GEAR SHIFT FORK 5th/6th				◆	◆
23	K20.00952	1310 304 161		1	5.VİTES SENKROMENÇ	SYNCHRONIZING RING		◆	◆	◆	◆
24	K20.01817	1310 304 137		1	5.VİTES DİŞLİSİ 27 DİŞ	GEAR 5th 27 T		◆	◆		

NOTES :

X1,X2,X3,X4 are used in conjunction with the encoded parts.

NOTLAR :

X1,X2,X3,X4 ile kodlanan parçalar birlikte kullanılır.

Original parts names, oem numbers, symbols and descriptions used in this catalogue are for reference purposes only.

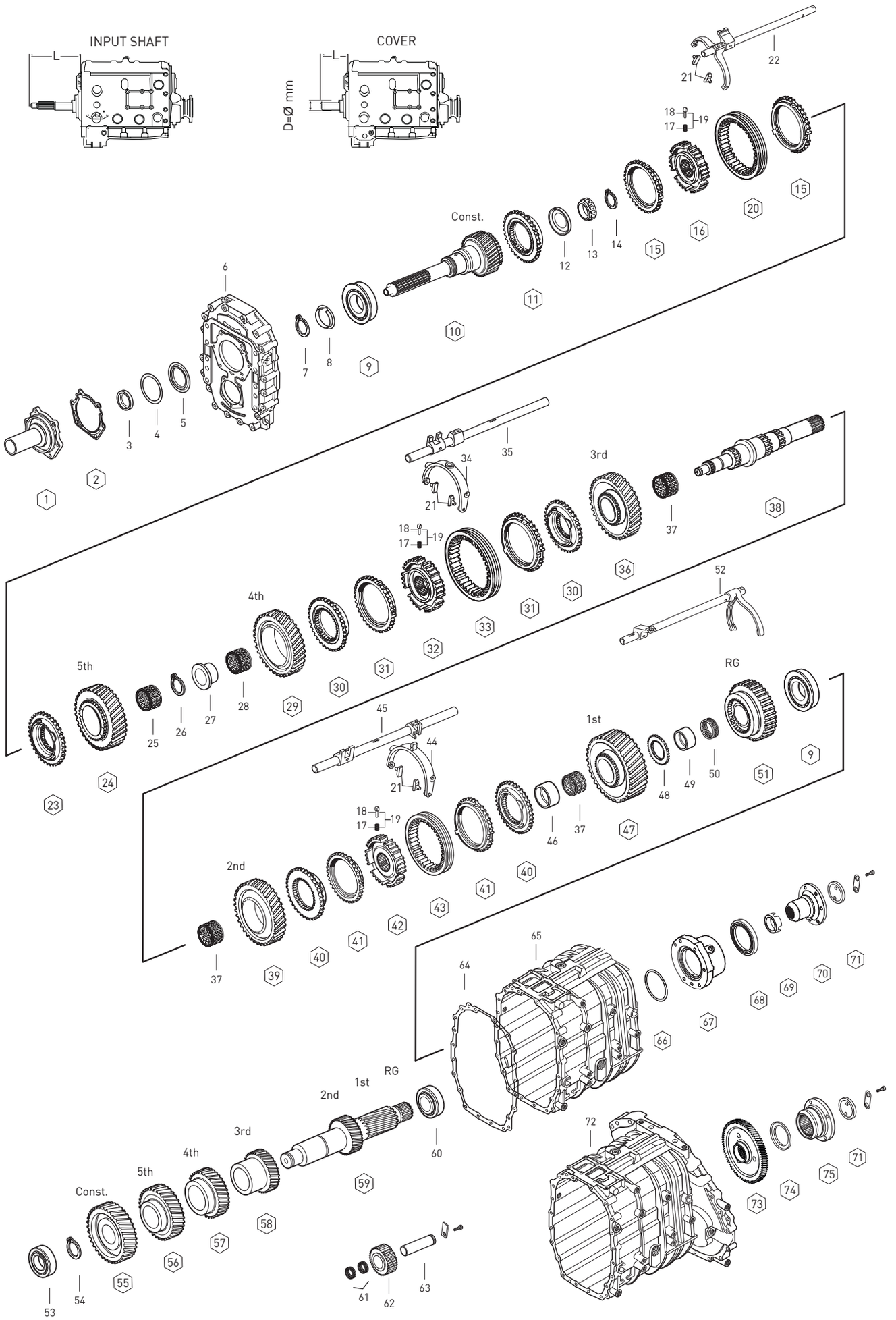

Original parts names, oem numbers, symbols and descriptions used in this catalogue are for reference purposes only.

Fig.	Kacmaz No.	Oem No	Oem Old No	Pcs.	Ürün Tanımı	Description	Sizes	(X1): 6 S 1600 BD	(X2): 6 S 1601 BD IT	(X3): 6 S 1600-1700-1900 BO	(X4): 6 S 1701-1901 BO IT
24	K20.00942	1310 304 138		1	5.VİTES DİŞLİSİ 23 DİŞ	GEAR 5th 23 T				◆	◆
25		0735 321 560	(0750 115 580)	1	5.VİTES MASURA BİLYA	NEEDLE CAGE	65.0X73.0X48.0mm	◆	◆	◆	◆
26		0730 501 729		1	4./5.VİTES AYAR SEGMANI	RETAINING RING	3.70mm	◆	◆	◆	◆
26		0730 501 730		1	4./5.VİTES AYAR SEGMANI	RETAINING RING	3.80mm	◆	◆	◆	◆
26		0730 501 731		1	4./5.VİTES AYAR SEGMANI	RETAINING RING	3.90mm	◆	◆	◆	◆
26		0730 501 732		1	4./5.VİTES AYAR SEGMANI	RETAINING RING	4.00mm	◆	◆	◆	◆
27	K20.00969	0730 162 753		1	4.VİTES MAS.BİLYA ÇANAĞI	BEARING RACE		◆	◆	◆	◆
28		0735 321 392		1	4.VİTES MASURA BİLYA	NEEDLE CAGE	85.0X93.0X44.0mm	◆	◆	◆	◆
29	K20.01818	1310 304 177		1	4 VİTES DİŞLİSİ 28 DİŞ	GEAR 4th 28 T		◆	◆		
29	K20.00941	1310 304 178		1	4 VİTES DİŞLİSİ 28 DİŞ	GEAR 4th 28 T				◆	◆
30	K20.00937	1310 304 232		2	3./4.VİTES SENKROMENÇ	SYNCHRONIZING RING		◆	◆	◆	◆
31	K20.00108	1297 304 484	(1297 304 402)	2	3./4.VİTES SENK.FRENLEME	SYNCHRONIZING CONE		◆	◆	◆	◆
32	K20.00181	1312 304 052		1	3./4.VİTES YILDIZ DİŞLİ	GUIDE SLEEVE		◆	◆	◆	◆
33	K20.00103	1316 304 167	(0769 186 281)	1	3./4.VİTES SENK.HALKA	ENGAGING SLEEVE		◆	◆	◆	◆
			(1297 304 515)								
			(1315 304 135)								
34		1310 306 051		1	3./4.VİTES HİLALİ	GEAR SHIFT FORK 3rd/4th		◆	◆	◆	◆
35		1310 206 084		1	3./4.VİTES HİLAL MİLİ	SELECTOR ROD 3rd/4th		◆	◆		
35		1310 206 079		1	3./4.VİTES HİLAL MİLİ	SELECTOR ROD 3rd/4th				◆	◆
36	K20.01914	1310 304 185		1	3.VİTES DİŞLİSİ 33 DİŞ	GEAR 3rd 33 T		◆	◆		
36	K20.01915	1310 304 186		1	3.VİTES DİŞLİSİ 34 DİŞ	GEAR 3rd 34 T				◆	◆
37		0735 321 432		3	1./2./3.VİTES MASURA BİLYA	NEEDLE CAGE	92.0x100.0x49.50mm	◆	◆	◆	◆
38	K20.00946	1310 304 189		1	KAMALI MİL	MAIN SHAFT		◆	◆	◆	◆
39	K20.01916	1310 304 196		1	2.VİTES DİŞLİSİ 43 DİŞ	GEAR 2nd 43 T		◆	◆	◆	◆
40	K20.00182	1313 304 009		2	1./2.VİTES SENKROMENÇ	ENGAGING RING		◆	◆	◆	◆
41	K20.00112	1297 304 485	(1297 304 401)	2	1./2.VİTES SENK.FRENLEME	SYNCHRONIZING CONE		◆	◆	◆	◆
42	K20.00179	1313 304 008		1	1./2.VİTES YILDIZ DİŞLİ	GUIDE SLEEVE		◆	◆	◆	◆
43	K20.00115	1316 304 078		1	1./2.VİTES SENK.HALKA	ENGAGING SLEEVE		◆	◆	◆	◆
44		1310 306 052		1	1./2.VİTES HİLALİ	GEAR SHIFT FORK 1st/2nd		◆	◆	◆	◆
45		1310 206 083		1	1./2.VİTES HİLAL MİLİ	SELECTOR ROD 1st/2nd		◆	◆		
45		1310 206 078		1	1./2.VİTES HİLAL MİLİ	SELECTOR ROD 1st/2nd				◆	◆
46	K20.02078	0735 295 148		1	1.VİTES MAS.BİLYA ÇANAĞI	BEARING RACE	80.50x92.0x49.50mm	◆	◆	◆	◆
47	K20.00955	1310 304 182		1	1.VİTES DİŞLİSİ 50 DİŞ	GEAR 1st 50 T		◆	◆	◆	◆
48	K20.00950	1310 304 188	(1310 304 187)	1	GERİ VİTES YILDIZ DİŞLİ	HUB		◆	◆	◆	◆
49	K20.02079	0750 119 131		1	GERİ VİT.MAS.BİLYA ÇANAĞI	BEARING RACE		◆	◆	◆	◆
50		0735 321 394		1	GERİ VİTES MASURA BİLYA	NEEDLE CAGE	82.0x90.0x47.0mm	◆	◆	◆	◆
51	K20.00957	1310 304 201		1	GERİ VİTES DİŞLİSİ 46 DİŞ	REVERSE GEAR 46 T		◆	◆	◆	◆
52		1310 206 082		1	GERİ VİTES HİLALİ	GEAR SHIFT FORK RG		◆	◆		
52		1310 206 077		1	GERİ VİTES HİLALİ	GEAR SHIFT FORK RG				◆	◆
53	K20.01123	0750 117 083	(0750 120 291)	1	GRUP MİLİ ÖN BİLYA	ROLLER BEARING	50.80x95.20x27.70mm	◆	◆	◆	◆
			(0750 120 067)								
			(1246 203 007)								
54		0630 501 373		1	GRUP MİLİ ÖN BİLYA SEGMANI	RETAINING RING	1.80mm	◆	◆	◆	◆

NOTES :

X1,X2,X3,X4 are used in conjunction with the encoded parts.

NOTLAR :

X1,X2,X3,X4 ile kodlanan parçalar birlikte kullanılır.

Original parts names, oem numbers, symbols and descriptions used in this catalogue are for reference purposes only.

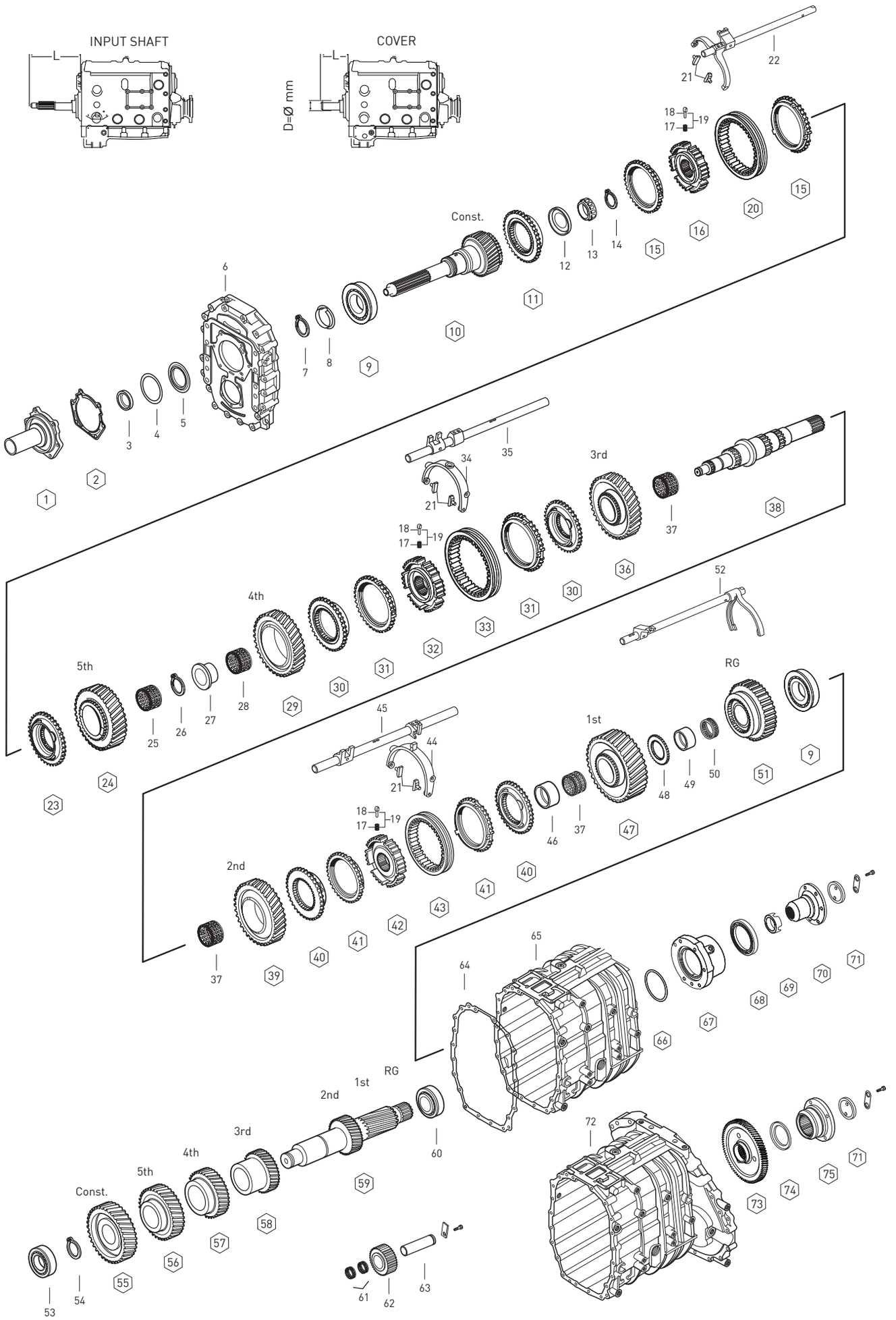

Original parts names, oem numbers, symbols and descriptions used in this catalogue are for reference purposes only.

Fig.	Kacmaz No.	Oem No	Oem Old No	Pcs.	Ürün Tanımı	Description	Sizes	(X1): 6S 1600 BD	(X2): 6S 1601 BD IT	(X3): 6S 1600-1700-1900 BO	(X4): 6S 1701-1901 BO IT
54		0630 501 366		1	GRUP MİLİ ÖN BİLYA SEGMANI	RETAINING RING	1.90mm	◆	◆	◆	◆
54		0630 501 363		1	GRUP MİLİ ÖN BİLYA SEGMANI	RETAINING RING	2.00mm	◆	◆	◆	◆
54		0630 501 364		1	GRUP MİLİ ÖN BİLYA SEGMANI	RETAINING RING	2.10mm	◆	◆	◆	◆
54		0630 501 365		1	GRUP MİLİ ÖN BİLYA SEGMANI	RETAINING RING	2.20mm	◆	◆	◆	◆
54		0630 501 189		1	GRUP MİLİ ÖN BİLYA SEGMANI	RETAINING RING	2.30mm	◆	◆	◆	◆
54		0630 501 190		1	GRUP MİLİ ÖN BİLYA SEGMANI	RETAINING RING	2.40mm	◆	◆	◆	◆
54		0630 501 047		1	GRUP MİLİ ÖN BİLYA SEGMANI	RETAINING RING	2.50mm	◆	◆	◆	◆
55	K20.01816	1310 303 068		1	PRİZDİREK KARŞILIĞI 50 DİŞ	CONSTANT GEAR 50 T		◆	◆		
55	K20.00958	1310 303 069		1	PRİZDİREK KARŞILIĞI 47 DİŞ	CONSTANT GEAR 47 T				◆	◆
56	K20.00954	1310 303 074		1	5.VİTES DİŞLİ KARŞILIĞI 39 DİŞ	GEAR 5th 39 T		◆	◆		
56	K20.01917	1310 303 079		1	5.VİTES DİŞLİ KARŞILIĞI 43 DİŞ	GEAR 5th 43 T				◆	◆
57	K20.00953	1310 303 075		1	4.VİTES DİŞLİ KARŞILIĞI 29 DİŞ	GEAR 4th 29 T		◆	◆		
57	K20.01918	1310 303 083		1	4.VİTES DİŞLİ KARŞILIĞI 31 DİŞ	GEAR 4th 31 T				◆	◆
58	K20.01815	1310 303 073		1	3.VİTES DİŞLİ KARŞILIĞI 23 DİŞ	GEAR 3rd 23 T		◆	◆		
58	K20.01919	1310 303 078		1	3.VİTES DİŞLİ KARŞILIĞI 24 DİŞ	GEAR 3rd 24 T				◆	◆
59	K20.01820	1310 303 053		1	GRUP MİLİ 12-18 DİŞ	COUNTER SHAFT 12-18 T		◆	◆	◆	◆
60	K20.01146	0735 300 511	(1246 203 008)	1	GRUP MİLİ ARKA BİLYA	ROLLER BEARING	44.45x95.25x27.78mm	◆	◆	◆	◆
			(0635 501 398)								
61		0750 115 233		2	KÜÇÜK GERİ VİT.MAS.BİLYA	NEEDLE CAGE	30.0x38.0x30.0mm	◆	◆	◆	◆
62	K20.01920	1310 305 011		1	KÜÇÜK GERİ VİTES 21 DİŞ	REV.IDLER GEAR 21 T		◆	◆	◆	◆
63		1310 305 001		1	KÜÇÜK GERİ VİTES PİMİ	PIN		◆	◆	◆	◆
64		1310 301 059		1	ŞANZ. ORTA GÖVDE CONTASI	GASKET		◆	◆	◆	◆
65		1310 201 012		1	ŞANZIMAN ORTA GÖVDE	HOUSING		◆		◆	
66		0634 313 100		1	ŞANZ.ARKA KAPAK ORİNGİ	O-RING	113x3mm	◆		◆	
67		1310 301 057		1	ŞANZ.ARKA KEÇE KAPAĞI	COVER		◆		◆	
68		0734 319 513		1	ŞANZ.ARKA KAPAK KEÇESİ	OIL SEAL	85x105x12mm	◆		◆	
69		1310 204 018		1	ŞANZ.KM.DEVİR SACI	PULSE STAR		◆		◆	
70		1310 343 027		1	ŞANZIMAN FLANŞI	OUTPUT FLANGE		◆		◆	
71		1259 303 004		1	ŞANZ.FLANŞI ALIN PULU	THRUST WASHER		◆		◆	
72		6085 301 160		1	ŞANZIMAN ORTA GÖVDE	HOUSING	RETARDER		◆		◆
73	K20.01921	6085 301 091		1	RETARDER DİŞLİSİ	ENGAGING RING	RETARDER		◆		◆
74		1310 304 193		1	ŞANZ.FLANŞ EMNİYET SACI	DUST COVER			◆		◆
75		1310 304 162		1	ŞANZIMAN FLANŞI	OUTPUT FLANGE			◆		◆

NOTES :

X1,X2,X3,X4 are used in conjunction with the encoded parts.

NOTLAR :

X1,X2,X3,X4 ile kodlanan parçalar birlikte kullanılır.

Original parts names, oem numbers, symbols and descriptions used in this catalogue are for reference purposes only.

SYNCHRONIZER KIT 5th/6th

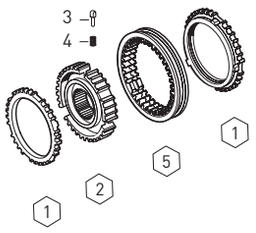

Fig.	Kacmaz No.	Oem No	Oem Old No	Pcs.	Ürün Tanımı	Description
	K20.01874	1310 204 016		Kit	5./6.VİT.SENKROMENÇ KİTİ	SYNCH.KIT 5th/6th
1	K20.00781	1268 304 594	(1268 304 445)	2	5./6.VİT.SENK.FRENLEME	SYNCHRONIZING CONE
2	K20.00943	1310 304 158		1	5./6.VİT.YILDIZ DİŞLİ	GUIDE SLEEVE
3	K20.00111	1297 304 436		3	PRİZ.YILDIZ DİŞLİ FİŞEĞİ	PRESSURE PIECE
4	K20.00110	0732 040 409		3	PRİZ.YILDIZ DİŞLİ YAYI	SPRING
5	K20.00951	1310 304 195		1	5./6.VİT.SENK.HALKA	ENGAGING SLEEVE

SYNCHRONIZER KIT 5th/6th

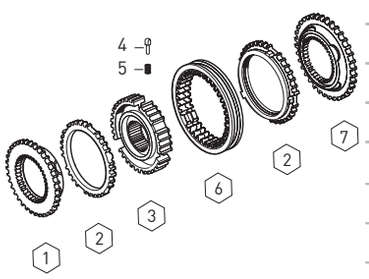

Fig.	Kacmaz No.	Oem No	Oem Old No	Pcs.	Ürün Tanımı	Description
	K20.01872	2001872		Kit	5./6.VİT.SENKROMENÇ KİTİ	SYNCH.KIT 5th/6th
1	K20.10003	1310 302 045	(1310 304 160)	1	PRİZ DİREK SENKROMENÇ	ENGAGING RING
2	K20.00781	1268 304 594	(1268 304 445)	2	5./6.VİT.SENK.FRENLEME	SYNCHRONIZING CONE
3	K20.00943	1310 304 158		1	5./6.VİT.YILDIZ DİŞLİ	GUIDE SLEEVE
4	K20.00111	1297 304 436		3	PRİZ.YILDIZ DİŞLİ FİŞEĞİ	PRESSURE PIECE
5	K20.00110	0732 040 409		3	PRİZ.YILDIZ DİŞLİ YAYI	SPRING
6	K20.00951	1310 304 195		1	5./6.VİT.SENK.HALKA	ENGAGING SLEEVE
7	K20.00952	1310 304 161		1	5.VİTES SENKROMENÇ	ENGAGING RING

SYNCHRONIZER KIT 5th/6th

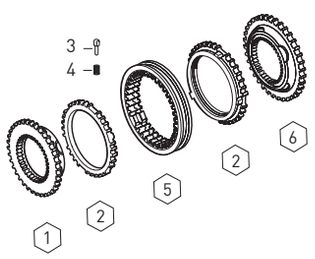

Fig.	Kacmaz No.	Oem No	Oem Old No	Pcs.	Ürün Tanımı	Description
	K20.01873	2001873		Kit	5./6.VİT.SENKROMENÇ KİTİ	SYNCH.KIT 5th/6th
1	K20.10003	1310 302 045	(1310 304 160)	1	PRİZ DİREK SENKROMENÇ	ENGAGING RING
2	K20.00781	1268 304 594	(1268 304 445)	2	5./6.VİT.SENK.FRENLEME	SYNCHRONIZING CONE
3	K20.00111	1297 304 436		3	PRİZ.YILDIZ DİŞLİ FİŞEĞİ	PRESSURE PIECE
4	K20.00110	0732 040 409		3	PRİZ.YILDIZ DİŞLİ YAYI	SPRING
5	K20.00951	1310 304 195		1	5./6.VİT.SENK.HALKA	ENGAGING SLEEVE
6	K20.00952	1310 304 161		1	5.VİTES SENKROMENÇ	ENGAGING RING

SYNCHRONIZER KIT 3rd/4th

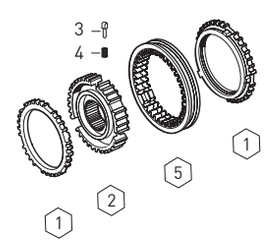

Fig.	Kacmaz No.	Oem No	Oem Old No	Pcs.	Ürün Tanımı	Description
	K20.01875	1349 204 001		Kit	3./4.VİT.SENKROMENÇ KİTİ	SYNCH.KIT 3rd/4th
1	K20.00108	1297 304 484	(1297 304 402)	2	3./4.VİT.SENK.FRENLEME	SYNCHRONIZING CONE
2	K20.00181	1312 304 052		1	3./4.VİT.YILDIZ DİŞLİ	GUIDE SLEEVE
3	K20.00111	1297 304 436		3	PRİZ.YILDIZ DİŞLİ FİŞEĞİ	PRESSURE PIECE
4	K20.00110	0732 040 409		3	PRİZ.YILDIZ DİŞLİ YAYI	SPRING
5	K20.00103	1316 304 167	(1315 304 135)	1	3./4.VİT.SENK.HALKA	ENGAGING SLEEVE

SYNCHRONIZER KIT 3rd/4th

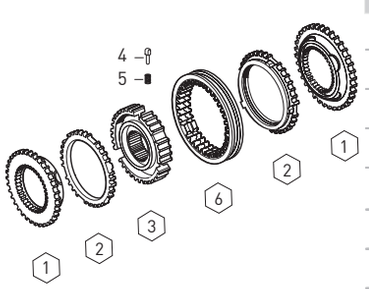

Fig.	Kacmaz No.	Oem No	Oem Old No	Pcs.	Ürün Tanımı	Description
	K20.01876	2001876		Kit	3./4.VİT.SENKROMENÇ KİTİ	SYNCH.KIT 3rd/4th
1	K20.00937	1310 304 232		2	3./4.VİT.SENKROMENÇ	ENGAGING RING
2	K20.00108	1297 304 484	(1297 304 402)	2	3./4.VİT.SENK.FRENLEME	SYNCHRONIZING CONE
3	K20.00181	1312 304 052		1	3./4.VİT.YILDIZ DİŞLİ	GUIDE SLEEVE
4	K20.00111	1297 304 436		3	3./4.VİT.YILDIZ DİŞLİ FİŞEĞİ	PRESSURE PIECE
5	K20.00110	0732 040 409		3	3./4.VİT.YILDIZ DİŞLİ YAYI	SPRING
6	K20.00103	1316 304 167	(1315 304 135)	1	3./4.VİT.SENK.HALKA	ENGAGING SLEEVE

Original parts names, oem numbers, symbols and descriptions used in this catalogue are for reference purposes only.

Fig.	Kacmaz No.	Oem No	Oem Old No	Pcs.	Ürün Tanımı	Description
	K20.01877	2001877		Kit	3./4.VİT.SENKROMENÇ KİTİ	SYNCH.KIT 3rd/4th
1	K20.00937	1310 304 232		1	3./4.VİT.SENKROMENÇ	ENGAGING RING
2	K20.00108	1297 304 484	(1297 304 402)	2	3./4.VİT.SENK.FRENLEME	SYNCHRONIZING CONE
3	K20.00111	1297 304 436		3	3./4.VİT.YILDIZ DİŞLİ FİŞEĞİ	PRESSURE PIECE
4	K20.00110	0732 040 409		3	3./4.VİT.YILDIZ DİŞLİ YAYI	SPRING
5	K20.00103	1316 304 167	(1315 304 135)	1	3./4.VİT.SENK.HALKA	ENGAGING SLEEVE

SYNCHRONIZER KIT 3rd/4th

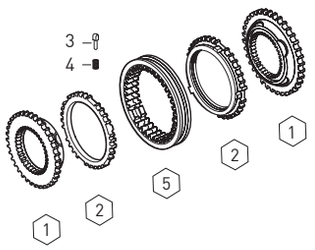

Fig.	Kacmaz No.	Oem No	Oem Old No	Pcs.	Ürün Tanımı	Description
	K20.00526	1313 204 003		Kit	1./2.VİT.SENKROMENÇ KİT	SYNCH.KIT 1st/2nd
1	K20.00112	1297 304 485	(1297 304 401)	2	1./2.VİT.FRENLEME	SYNCH.CONE
2	K20.00179	1313 304 008		1	1./2.VİT.YILDIZ DİŞLİ	GUIDE SLEEVE
3	K20.00111	1297 304 436		3	1./2.VİT.YILDIZ DİŞLİ FİŞEĞİ	PRESSURE PIECE
4	K20.00110	0732 040 409		3	1./2.VİT.YILDIZ DİŞLİ YAYI	SPRING
5	K20.00115	1316 304 078		1	1./2.VİT.SENK.HALKA	ENGAGING SLEEVE

SYNCHRONIZER KIT 1st/2nd

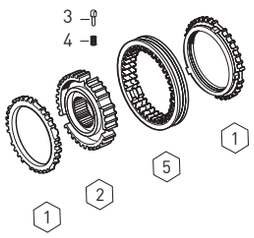

Fig.	Kacmaz No.	Oem No	Oem Old No	Pcs.	Ürün Tanımı	Description
	K20.00527	1313 298 909		Kit	1./2.VİT.SENKROMENÇ KİT	SYNCH.KIT 1st/2nd
1	K20.00182	1313 304 009		2	1./2.VİT.SENKROMENÇ	ENGAGING RING
2	K20.00112	1297 304 485	(1297 304 401)	2	1./2.VİT.FRENLEME	SYNCH.CONE
3	K20.00179	1313 304 008		1	1./2.VİT.YILDIZ DİŞLİ	GUIDE SLEEVE
4	K20.00111	1297 304 436		3	1./2.VİT.YILDIZ DİŞLİ FİŞEĞİ	PRESSURE PIECE
5	K20.00110	0732 040 409		3	1./2.VİT.YILDIZ DİŞLİ YAYI	SPRING
6	K20.00115	1316 304 078		1	1./2.VİT.SENK.HALKA	ENGAGING SLEEVE

SYNCHRONIZER KIT 1st/2nd

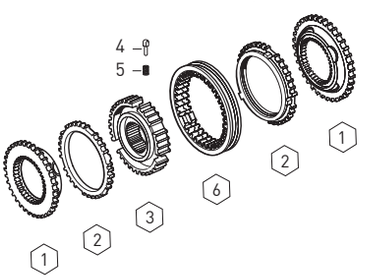

Fig.	Kacmaz No.	Oem No	Oem Old No	Pcs.	Ürün Tanımı	Description
	K20.01878	1313 298 911		Kit	1./2.VİT.SENKROMENÇ KİT	SYNCH.KIT 1st/2nd
1	K20.00182	1313 304 009		2	1./2.VİT.SENKROMENÇ	ENGAGING RING
2	K20.00112	1297 304 485	(1297 304 401)	2	1./2.VİT.FRENLEME	SYNCH.CONE
3	K20.00115	1316 304 078		1	1./2.VİT.SENK.HALKA	ENGAGING SLEEVE
4	K20.00111	1297 304 436		3	1./2.VİT.YILDIZ DİŞLİ FİŞEĞİ	PRESSURE PIECE
5	K20.00110	0732 040 409		3	1./2.VİT.YILDIZ DİŞLİ YAYI	SPRING

SYNCHRONIZER KIT 1st/2nd

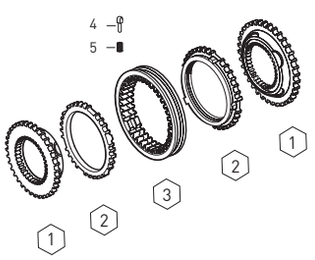

Original parts names, oem numbers, symbols and descriptions used in this catalogue are for reference purposes only.

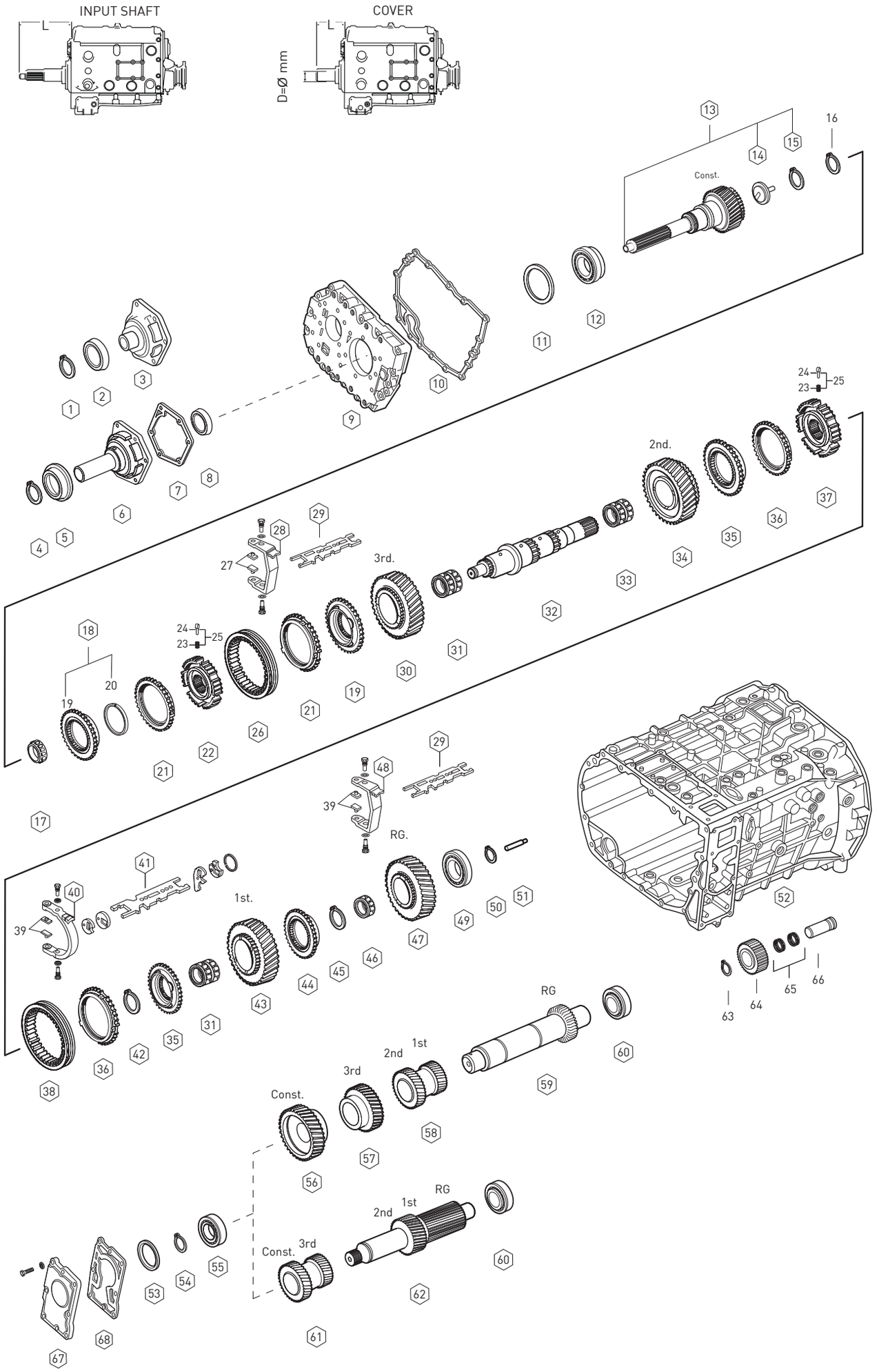

Original parts names, oem numbers, symbols and descriptions used in this catalogue are for reference purposes only.

Fig.	Kacmaz No.	Oem No	Oem Old No	Pcs.	Ürün Tanımı	Description	Sizes	Notes	(X1) : R.6,38-0,76	(X2) : R.8,73-1,00
1		0630 501 042		1	PRİZ.KEÇE KAPAK ÖN SEGMANI	RETAINING RING	62.0X2.0mm			◆
2		1304 302 366		1	PRİZ.KEÇE KAPAK ÖN KEÇE	OIL SEAL				◆
3		1304 302 371		1	PRİZDİREK KEÇE KAPAĞI	COVER				◆
4		0630 501 051		1	PRİZ.KEÇE KAPAK ÖN SEGMANI	RETAINING RING	82.0X2.5mm		◆	◆
5		1304 302 232		1	PRİZ.KEÇE KAPAK EMN.SACI	GUARD			◆	◆
6		1304 302 361		1	PRİZDİREK KEÇE KAPAĞI	COVER			◆	
6		1304 302 381		1	PRİZDİREK KEÇE KAPAĞI	COVER			◆	
6		1304 302 355		1	PRİZDİREK KEÇE KAPAĞI	COVER			◆	
6		1304 302 350		1	PRİZDİREK KEÇE KAPAĞI	COVER			◆	◆
6		1304 302 352		1	PRİZDİREK KEÇE KAPAĞI	COVER				◆
6		1304 302 356		1	PRİZDİREK KEÇE KAPAĞI	COVER				◆
7		0501 322 828	(0501 316 990)	1	PRİZ.KEÇE KAPAK CONTASI	SHEET GASKET			◆	◆
8	K20.01001	0734 310 104	(0734 310 161)	1	PRİZDİREK KEÇESİ	OIL SEAL	52.0X68.0X8.0mm		◆	◆
9		1304 301 332		1	ŞANZIMAN ÖN GÖVDE	HOUSING			◆	◆
9	K20.02119	1324 301 169		1	ŞANZIMAN ÖN GÖVDE	HOUSING				◆
10		0501 313 379		1	ŞANZIMAN ÖN GÖVDE CONTASI	GASKET			◆	◆
10	K20.01986	0501 321 065		1	ŞANZIMAN ÖN GÖVDE CONTASI	GASKET				◆
11		1204 308 123		1	PRİZDİREK ÖN BİLYA RAYNELİ	SHIM	1.00mm		◆	◆
11		0730 002 659		1	PRİZDİREK ÖN BİLYA RAYNELİ	SHIM	1.30mm		◆	◆
11		0730 002 658		1	PRİZDİREK ÖN BİLYA RAYNELİ	SHIM	1.40mm		◆	◆
11	K20.01724	0730 002 657		1	PRİZDİREK ÖN BİLYA RAYNELİ	SHIM	1.50mm		◆	◆
11		0730 002 656		1	PRİZDİREK ÖN BİLYA RAYNELİ	SHIM	1.60mm		◆	◆
11		0730 002 655		1	PRİZDİREK ÖN BİLYA RAYNELİ	SHIM	1.70mm		◆	◆
11		0730 002 654		1	PRİZDİREK ÖN BİLYA RAYNELİ	SHIM	1.80mm		◆	◆
11		0730 006 169		1	PRİZDİREK ÖN BİLYA RAYNELİ	SHIM	1.90mm		◆	◆
11		0730 006 180		1	PRİZDİREK ÖN BİLYA RAYNELİ	SHIM	2.00mm		◆	◆
11		0730 006 182		1	PRİZDİREK ÖN BİLYA RAYNELİ	SHIM	2.10mm		◆	◆
11		0730 006 184		1	PRİZDİREK ÖN BİLYA RAYNELİ	SHIM	2.20mm		◆	◆
11		0730 005 857		1	PRİZDİREK ÖN BİLYA RAYNELİ	SHIM	2.30mm		◆	◆
12	K20.01151	0750 117 518		1	PRİZDİREK ÖN BİLYA	ROLLER BEARING	71.4X120.0X32.5mm		◆	◆
13	K20.01922	1304 202 208		1	PRİZDİREK 29 DİŞ	INPUT SHAFT 29T			◆	◆
13	K20.01923	1304 202 210		1	PRİZDİREK 29 DİŞ	INPUT SHAFT 29T			◆	◆
13	K20.01924	1304 202 212		1	PRİZDİREK 29 DİŞ	INPUT SHAFT 29T			◆	
13	K20.01925	1304 202 207		1	PRİZDİREK 29 DİŞ	INPUT SHAFT 29T			◆	
13	K20.01926	1304 202 205		1	PRİZDİREK 29 DİŞ	INPUT SHAFT 29T				◆
13	K20.01927	1304 202 206		1	PRİZDİREK 29 DİŞ	INPUT SHAFT 29T				◆
13	K20.01928	1304 202 211		1	PRİZDİREK 29 DİŞ	INPUT SHAFT 29T				◆
14	K20.01501	1304 302 440		1	PRİZDİREK YAĞ PİPETİ	OIL PIPET			◆	◆
15	K20.01502	0630 502 063		1	PRİZDİREK SEGMANI	RETAINING RING	DIN472 58.0X2.0mm		◆	◆
16		0630 501 157		1	KAMALI MİL UÇ BİLYA SEGMANI	RETAINING RING	42.0X2.00mm		◆	◆
16		0630 501 208		1	KAMALI MİL UÇ BİLYA SEGMANI	RETAINING RING	42.0X2.10mm		◆	◆

NOTES :

X1,X2 are used conjunction with the encoded parts.

NOTLAR :

X1,X2 ile kodlanan parçalar birlikte kullanılır.

Original parts names, oem numbers, symbols and descriptions used in this catalogue are for reference purposes only.

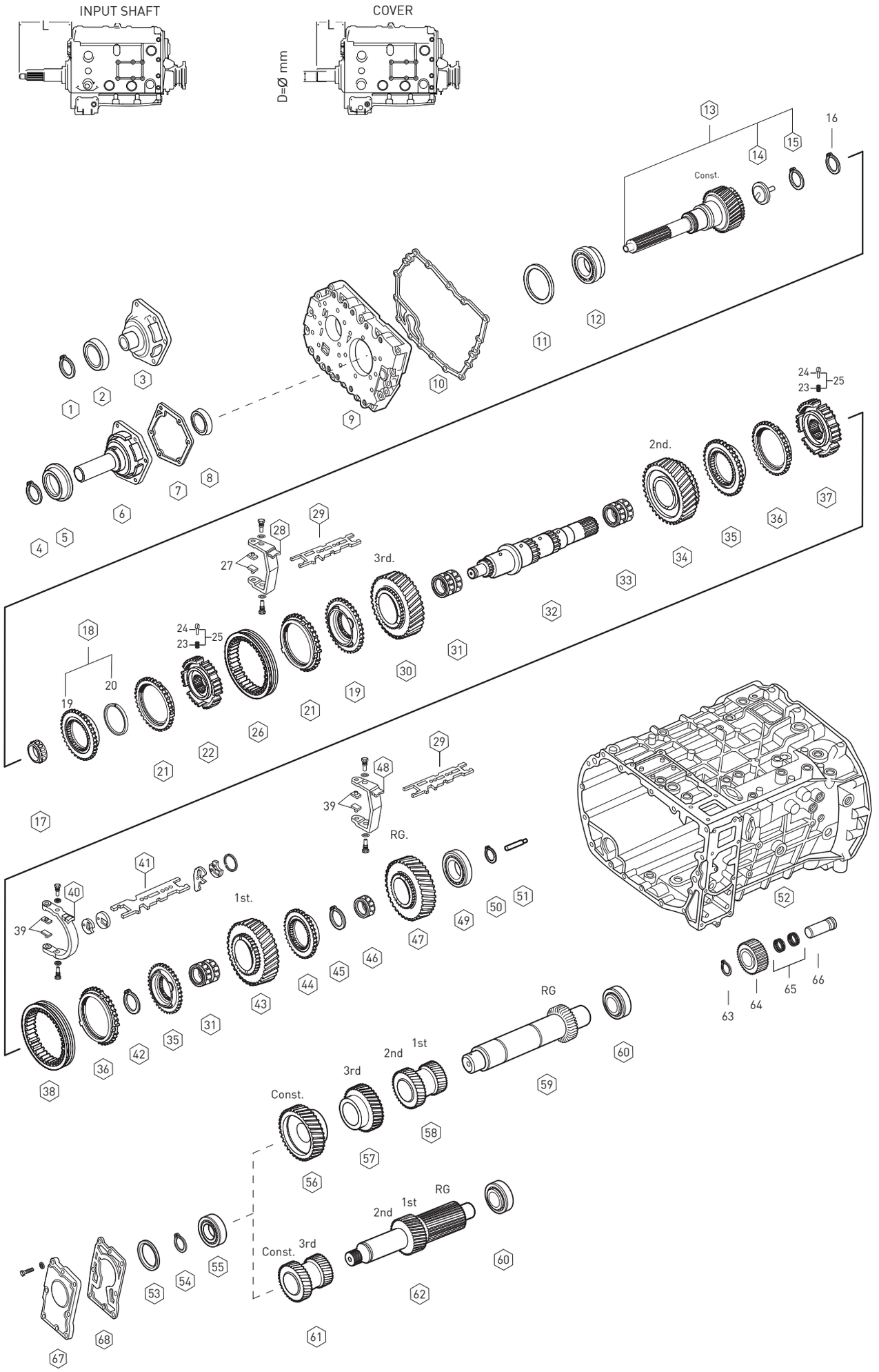

Original parts names, oem numbers, symbols and descriptions used in this catalogue are for reference purposes only.

Fig.	Kacmaz No.	Oem No	Oem Old No	Pcs.	Ürün Tanımı	Description	Sizes	Notes	(X1) : R.6,38-0,76	(X2) : R.8,73-1,00
16		0630 501 210		1	KAMALI MİL UÇ BİLYA SEGMANI	RETAINING RING	42.0X2.20mm		◆	◆
16		0630 501 156		1	KAMALI MİL UÇ BİLYA SEGMANI	RETAINING RING	42.0X2.30mm		◆	◆
16		0630 501 120		1	KAMALI MİL UÇ BİLYA SEGMANI	RETAINING RING	42.0X2.40mm		◆	◆
16		0630 531 052		1	KAMALI MİL UÇ BİLYA SEGMANI	RETAINING RING	42.0X2.50mm		◆	◆
17	K20.01109	0750 117 232	(0735 371 563)	1	KAMALI MİL UÇ BİLYA	ROLLER BEARING	42.07X82.5X40.0mm		◆	◆
18	K20.00915	1304 202 214		1	PRİZDİREK SENKROMENÇ	ENGAGING RING			◆	◆
19	K20.00919	1304 302 425		2	PRİZ-3.VİTES SENKROMENÇ	ENGAGING RING			◆	◆
20	K20.01041	0501 314 108		1	SENKROMENÇ YAĞ KEÇESİ	OIL DAM			◆	◆
21	K20.00916	1311 304 255		2	PRİZ-3.VİTES SENK.FRENLEME	SYNCHRONIZING CONE			◆	◆
22	K20.00917	1304 304 651		1	PRİZ-3.VİTES YILDIZ DİŞLİ	GUIDE SLEEVE			◆	◆
23	K20.00110	0732 040 409		6	PRİZ-3./1.-2.VİT.YIL.DİŞLİ YAYI	SPRING			◆	◆
24	K20.00111	1297 304 436		6	PRİZ-3./1.-2.VİT.YIL.DİŞLİ FİŞEĞİ	PRESSURE PIECE			◆	◆
25	K20.01745	1295 298 956		kit	YILDIZ DİŞLİ YAY FİŞEK TK.	REPAIR KIT			◆	◆
26	K20.00918	1304 304 664		1	PRİZ.-3.VİT.SENK.HALKA	ENGAGING SLEEVE			◆	◆
27	K20.02131	1304 306 107		2	PRİZ.-3.VİT.HİLAL PABUCU	SLIDING PAD			◆	
27	K20.00169	1290 306 066		2	PRİZ.-3.VİT.HİLAL PABUCU	SLIDING PAD				◆
28		1304 306 103		1	PRİZ.-3.VİT.HİLALİ	GEAR SHIFT FORK 3rd/4th			◆	
28		1304 306 102		1	PRİZ.-3.VİT.HİLALİ	GEAR SHIFT FORK 3rd/4th				◆
28		1304 306 106		1	PRİZ.-3.VİT.HİLALİ	GEAR SHIFT FORK 3rd/4th				◆
29		1304 306 115		1	PRİZ.-3./GERİ VİT.HİLAL ÇITASI	GEAR SHIFT RAIL 3rd/4th/RG			◆	◆
29		1304 306 136		1	PRİZ.-3./GERİ VİT.HİLAL ÇITASI	GEAR SHIFT RAIL 3rd/4th/RG			◆	◆
30	K20.01929	1304 304 637		1	3.VİTES DİŞLİSİ 24 DİŞ	GEAR 3rd 24T			◆	
30	K20.01930	1304 304 636		1	3.VİTES DİŞLİSİ 29 DİŞ	GEAR 3rd 29T				◆
31		0750 115 430		2	1./3.VİTES DİŞLİ MASURA BİLYA	NEEDLE CAGE	70.0X78.0X30.0mm		◆	◆
32	K20.01931	1304 304 604		1	KAMALI MİL	MAIN SHAFT			◆	◆
33		0735 320 378		1	2.VİTES DİŞLİ MASURA BİLYA	NEEDLE CAGE	75.0X83.0X55.0mm		◆	◆
34	K20.01932	1304 304 582		1	2.VİTES DİŞLİSİ 29 DİŞ	GEAR 2nd 29T			◆	
34	K20.01933	1304 304 581		1	2.VİTES DİŞLİSİ 33 DİŞ	GEAR 2nd 33T				◆
35	K20.00837	1311 304 015		2	1.-2.VİTES SENKROMENÇ	ENGAGING RING			◆	◆
36	K20.00781	1268 304 594	(1268 304 445)	2	1.-2.VİT.SENK.FRENLEME	SYNCHRONIZING CONE			◆	◆
37	K20.00913	1304 304 576		1	1.-2.VİTES YILDIZ DİŞLİ	GUIDE SLEEVE			◆	◆
38	K20.00255	1324 304 053	(1304 304 597)	1	1./2.VİT.SENK.HALKA	ENGAGING SLEEVE			◆	◆
			(1304 304 541)							
39	K20.00169	1290 306 066		2	1.-2./GERİ VİT.HİLAL PABUCU	SLIDING PAD			◆	◆
40		1304 306 043		1	1./2.VİTES HİLALİ	GEAR SHIFT FORK 1st/2nd			◆	◆
40		1304 306 009		1	1./2.VİTES HİLALİ	GEAR SHIFT FORK 1st/2nd			◆	◆
41		1304 306 112		1	1./2.VİTES HİLAL ÇITASI	GEAR SHIFT RAIL 1st/2nd			◆	◆
41		1304 306 137		1	1./2.VİTES HİLAL ÇITASI	GEAR SHIFT RAIL 1st/2nd			◆	◆
42		0630 501 325		1	1.-2.VİT.YILDIZ DİŞLİ SEGMANI	RETAINING RING	2.80mm		◆	◆
42		0630 501 326		1	1.-2.VİT.YILDIZ DİŞLİ SEGMANI	RETAINING RING	2.90mm		◆	◆
42		0630 501 327		1	1.-2.VİT.YILDIZ DİŞLİ SEGMANI	RETAINING RING	3.00mm		◆	◆

NOTES :

X1,X2 are used conjunction with the encoded parts.

NOTLAR :

X1,X2 ile kodlanan parçalar birlikte kullanılır.

Original parts names, oem numbers, symbols and descriptions used in this catalogue are for reference purposes only.

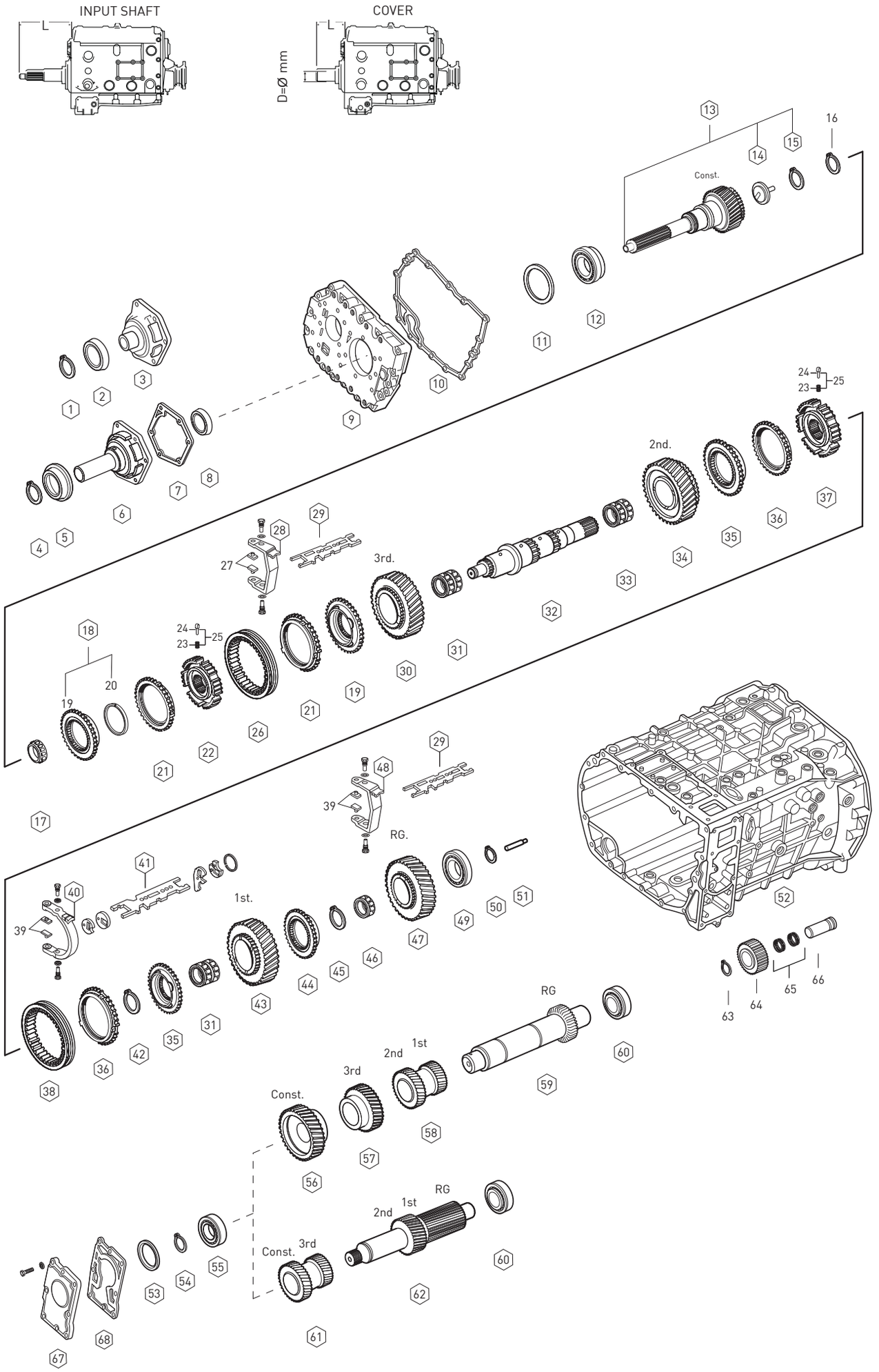

Original parts names, oem numbers, symbols and descriptions used in this catalogue are for reference purposes only.

Fig.	Kacmaz No.	Oem No	Oem Old No	Pcs.	Ürün Tanımı	Description	Sizes	Notes	(X1) : R.6,38-0,76	(X2) : R.8,73-1,00
42		0630 501 328		1	1.-2.VİT.YILDIZ DİŞLİ SEGMANI	RETAINING RING	3.10mm		◆	◆
42		0630 501 329		1	1.-2.VİT.YILDIZ DİŞLİ SEGMANI	RETAINING RING	3.20mm		◆	◆
43	K20.01934	1304 304 587		1	1.VİTES DİŞLİSİ 33 DİŞ	GEAR 1st 33T			◆	
43	K20.01935	1304 304 586		1	1.VİTES DİŞLİSİ 38 DİŞ	GEAR 1st 38T				◆
44	K20.00263	1304 304 007		1	GERİ VİTES YILDIZ DİŞLİ 20 DİŞ	HUB 20T			◆	◆
45		0630 501 067		1	GERİ VİT.YILDIZ DİŞLİ SEGMANI	RETAINING RING	2.40mm		◆	◆
45		0630 531 141		1	GERİ VİT.YILDIZ DİŞLİ SEGMANI	RETAINING RING	2.50mm		◆	◆
45		0630 501 197		1	GERİ VİT.YILDIZ DİŞLİ SEGMANI	RETAINING RING	2.60mm		◆	◆
45		0630 501 194		1	GERİ VİT.YILDIZ DİŞLİ SEGMANI	RETAINING RING	2.70mm		◆	◆
45		0630 501 195		1	GERİ VİT.YILDIZ DİŞLİ SEGMANI	RETAINING RING	2.80mm		◆	◆
46	K20.01309	0750 115 973	(0750 115 225)	1	GERİ VİTES MASURA BİLYA	NEEDLE CAGE	60.0X68.0X39.0mm		◆	◆
47	K20.01936	1304 304 672		1	GERİ VİTES DİŞLİSİ 35 DİŞ	REVERSE GEAR 35T			◆	◆
48		1304 306 011		1	GERİ VİTES HİLALİ	GEAR SHIFT FORK RG			◆	◆
49		0735 371 599		1	KAMALI MİL ARKA BİLYA	ROLLER BEARING	50.8X104.7X36.5mm		◆	◆
50		0630 501 145		1	GÜNEŞ DİŞLİ SEGMANI	RETAINING RING	2.10mm		◆	◆
50	K20.02138	0630 501 146		1	GÜNEŞ DİŞLİ SEGMANI	RETAINING RING	2.20mm		◆	◆
50		0630 501 147		1	GÜNEŞ DİŞLİ SEGMANI	RETAINING RING	2.30mm		◆	◆
50		0630 501 148		1	GÜNEŞ DİŞLİ SEGMANI	RETAINING RING	2.40mm		◆	◆
50	K20.02200	0630 531 064		1	GÜNEŞ DİŞLİ SEGMANI	RETAINING RING	2.50mm		◆	◆
50		0630 501 118		1	GÜNEŞ DİŞLİ SEGMANI	RETAINING RING	2.60mm		◆	◆
50		0630 501 116		1	GÜNEŞ DİŞLİ SEGMANI	RETAINING RING	2.70mm		◆	◆
50		0630 501 114		1	GÜNEŞ DİŞLİ SEGMANI	RETAINING RING	2.80mm		◆	◆
50		0630 501 112		1	GÜNEŞ DİŞLİ SEGMANI	RETAINING RING	2.90mm		◆	◆
50	K20.01960	0630 531 065		1	GÜNEŞ DİŞLİ SEGMANI	RETAINING RING	3.00mm		◆	◆
50		0630 501 150		1	GÜNEŞ DİŞLİ SEGMANI	RETAINING RING	3.10mm		◆	◆
50		0630 501 151		1	GÜNEŞ DİŞLİ SEGMANI	RETAINING RING	3.20mm		◆	◆
51	K20.01506	1324 304 014	(1312 304 150)	1	KAMALI MİL YAĞ BORUSU	OIL PIPE			◆	◆
52		1304 301 375	(1304 301 337)	1	ŞANZIMAN ARKA GÖVDE	HOUSING			◆	◆
53		0730 002 939		1	GRUP MİLİ ÖN BİLYA PULU	THRUST WASHER	1.50mm		◆	◆
53		0730 002 938		1	GRUP MİLİ ÖN BİLYA PULU	THRUST WASHER	1.60mm		◆	◆
53		0730 002 937		1	GRUP MİLİ ÖN BİLYA PULU	THRUST WASHER	1.70mm		◆	◆
53		0730 002 936		1	GRUP MİLİ ÖN BİLYA PULU	THRUST WASHER	1.80mm		◆	◆
53		0730 002 935		1	GRUP MİLİ ÖN BİLYA PULU	THRUST WASHER	1.90mm		◆	◆
53		0730 002 934		1	GRUP MİLİ ÖN BİLYA PULU	THRUST WASHER	2.00mm		◆	◆
53		0730 004 732		1	GRUP MİLİ ÖN BİLYA PULU	THRUST WASHER	2.10mm		◆	◆
53		0730 004 734		1	GRUP MİLİ ÖN BİLYA PULU	THRUST WASHER	2.20mm		◆	◆
53		0730 004 736		1	GRUP MİLİ ÖN BİLYA PULU	THRUST WASHER	2.30mm		◆	◆
53		0730 003 436		1	GRUP MİLİ ÖN BİLYA PULU	THRUST WASHER	2.40mm		◆	◆
54		0630 501 040		1	GRUP MİLİ ÖN BİLYA SEGMANI	RETAINING RING	2.00mm		◆	◆
54		0630 501 140		1	GRUP MİLİ ÖN BİLYA SEGMANI	RETAINING RING	2.10mm		◆	◆
54		0630 501 104		1	GRUP MİLİ ÖN BİLYA SEGMANI	RETAINING RING	2.20mm		◆	◆

NOTES :

X1,X2 are used conjunction with the encoded parts.

NOTLAR :

X1,X2 ile kodlanan parçalar birlikte kullanılır.

Original parts names, oem numbers, symbols and descriptions used in this catalogue are for reference purposes only.

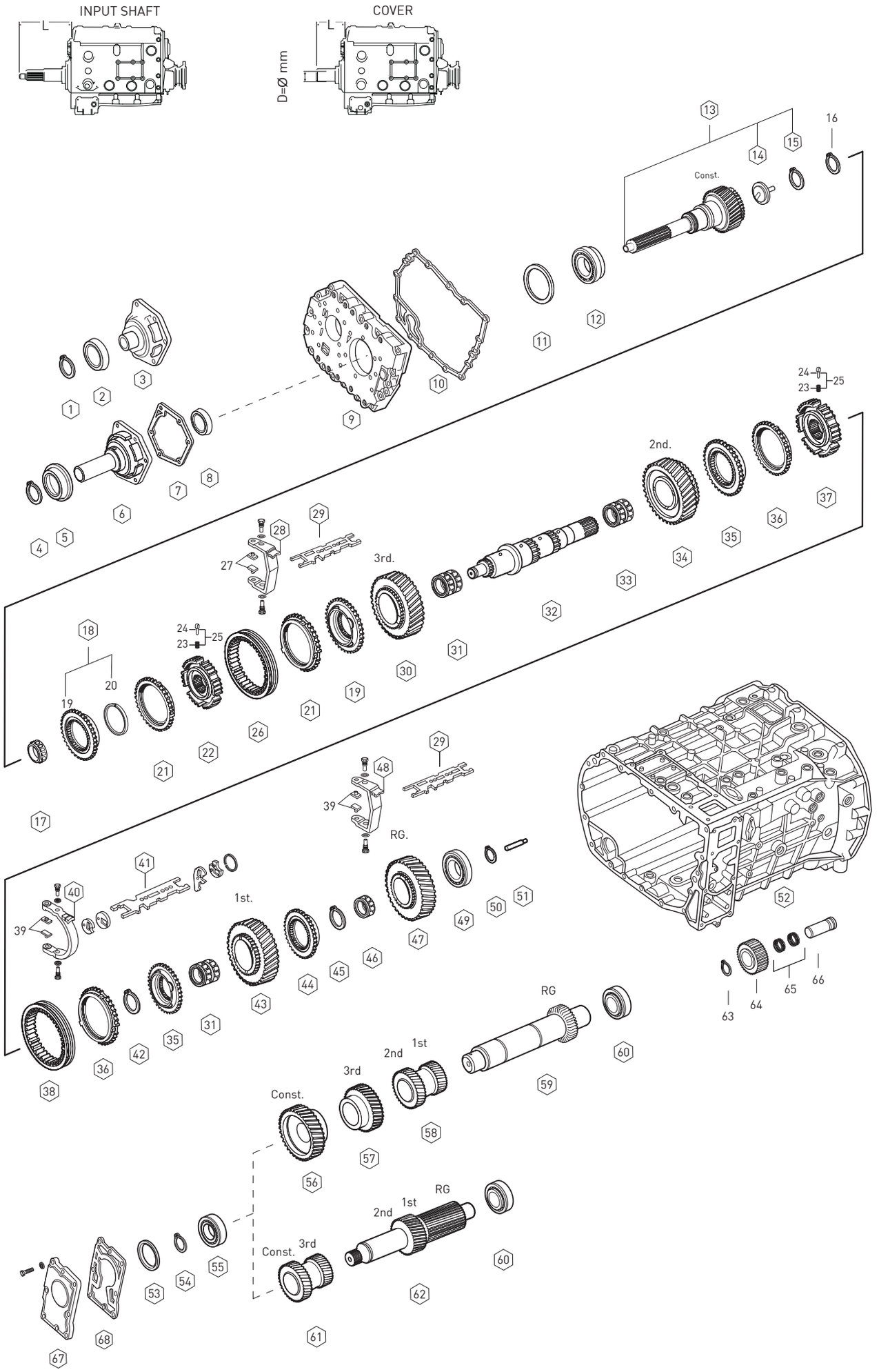

Original parts names, oem numbers, symbols and descriptions used in this catalogue are for reference purposes only.

Fig.	Kacmaz No.	Oem No	Oem Old No	Pcs.	Ürün Tanımı	Description	Sizes	Notes	(X1) : R.6,38-0,76	(X2) : R.8,73-1,00
54		0630 501 076		1	GRUP MİLİ ÖN BİLYA SEGMANI	RETAINING RING	2.30mm		◆	◆
54		0630 501 074		1	GRUP MİLİ ÖN BİLYA SEGMANI	RETAINING RING	2.40mm		◆	◆
54		0730 513 862		1	GRUP MİLİ ÖN BİLYA SEGMANI	RETAINING RING	2.50mm		◆	◆
55	K20.01154	0735 371 096		1	GRUP MİLİ ÖN BİLYA	ROLLER BEARING	40.0X85.0X33.0mm		◆	◆
56	K20.01938	1304 303 294		1	TAKVİYE DİŞLİ KARŞILIĞI 31 DİŞ	GEAR Const. 31T			◆	
57	K20.01939	1304 303 293		1	3.VİTES DİŞLİ KARŞILIĞI 34 DİŞ	GEAR 3rd 34T			◆	
58	K20.01940	1304 303 292		1	1./2.VİT.DİŞLİ KARŞ.19/23 DİŞ	DOUBLE GEAR 19/23T			◆	
59	K20.01941	1304 303 291		1	GRUP MİLİ 16 DİŞ	COUNTER SHAFT 16T			◆	
60	K20.01123	0750 117 083	(0750 120 291)	1	GRUP MİLİ ARKA BİLYA	ROLLER BEARING	50.8X95.2X27.7mm		◆	◆
			(0750 120 067)							
			(1246 203 007)							
61	K20.01942	1304 303 289		1	TAK./3.VİT.DİŞLİ KARŞ.23/31 DİŞ	DOUBLE GEAR 23/31T				◆
62	K20.01943	1304 303 322		1	GRUP MİLİ 16/19 DİŞ	COUNTER SHAFT 16/19T				◆
63		0630 502 022		1	KÜÇÜK GERİ VİT.KİLİT SEGMANI	LOCK RING	1.75mm		◆	◆
64	K20.00577	1304 305 043		1	KÜÇÜK GERİ VİTES 22 DİŞ	REV.IDLER GEAR 22T			◆	◆
65	K20.01333	0750 115 974	(0735 358 192)	2	KÜÇÜK GERİ VİT.MAS.BİLYA	NEEDLE CAGE	40.0X60.0X26.0mm		◆	◆
			(0750 115 229)							
66	K20.00576	1304 305 030	(1304 305 002)	1	KÜÇÜK GERİ VİTES PİMİ	PIN			◆	◆
67	K20.00939	0501 004 551		1	ŞANZIMAN YAĞ POMPASI	OIL PUMP			◆	◆
68		0501 322 829		1	ŞANZIMAN YAĞ POMPA CONTASI	SHEET GASKET			◆	◆

NOTES :
X1,X2 are used conjunction with the encoded parts.

NOTLAR :
X1,X2 ile kodlanan parçalar birlikte kullanılır.

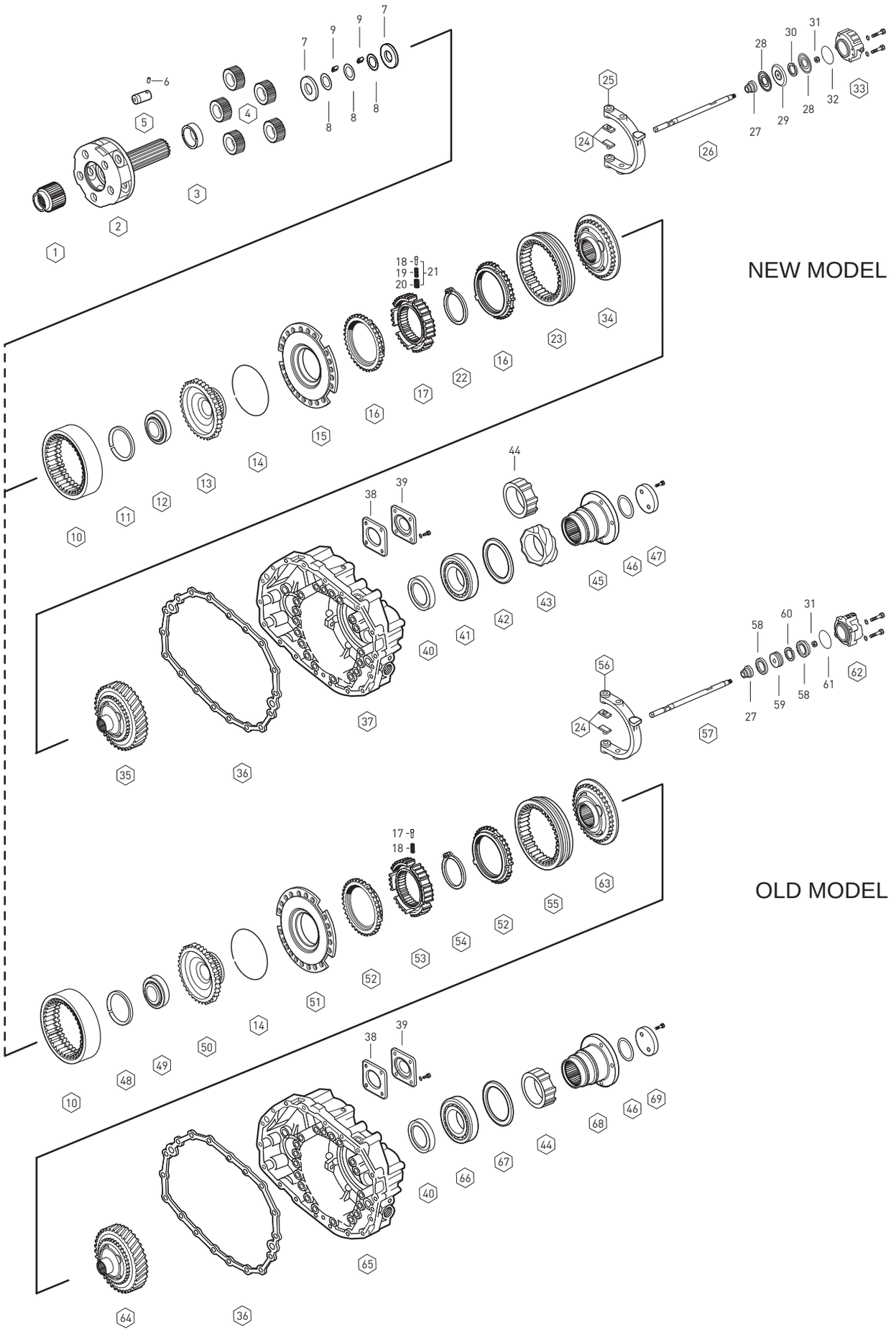

Original parts names, oem numbers, symbols and descriptions used in this catalogue are for reference purposes only.

Fig.	Kacmaz No.	Oem No	Oem Old No	Pcs.	Ürün Tanımı	Description	Sizes	Notes	(X1) : R.6,38-0,76	(X2) : R.8,73-1,00
1	K20.01937	1304 304 588		1	GÜNEŞ DİŞLİSİ 48 DİŞ	SUN GEAR 48T			◆	◆
2		1304 232 092		1	ŞANZIMAN HEYKELİ	PLANETARY CARRIER			◆	◆
3	K20.01612	1304 333 012		1	ŞANZIMAN HEYKEL BURCU	BUSHING			◆	
4		1304 232 051		5	HEYK.KOZA DİŞLİ TAKIMI	PLANETARY GEAR SET			◆	◆
5	K20.00321	1304 332 111	(1304 332 019)	5	HEYKEL KOZA DİŞLİ PİMİ	PLANET SHAFT			◆	◆
6		0631 329 037		5	HEY.KOZA DİŞLİ PİM KİLİT PİMİ	LOCK PIN	4.0X26.0mm		◆	◆
7	K20.01508	0730 150 767	(0501 304 692)	10	HEYKEL KOZA DİŞLİ PULU	THRUST WASHER			◆	◆
8	K20.01509	0730 103 102		15	HEYKEL KOZA DİŞLİ PULU	THRUST WASHER			◆	◆
9	K20.01451	0735 470 115		200	HEYK.KOZA DİŞ.TANE BİLYA	NEEDLE ROLLER	5X15.3mm		◆	◆
10		1304 332 122		1	ÇEMBER DİŞLİ 117 DİŞ	RING WHEEL 117 T			◆	◆
11		0730 513 760		1	PLANET ÇAN DİŞLİ BİLYA SEK.	RETAINING RING	2.00mm		◆	
11		0730 513 759		1	PLANET ÇAN DİŞLİ BİLYA SEK.	RETAINING RING	2.10mm		◆	
11		0730 513 758		1	PLANET ÇAN DİŞLİ BİLYA SEK.	RETAINING RING	2.20mm		◆	
11		0730 513 757		1	PLANET ÇAN DİŞLİ BİLYA SEK.	RETAINING RING	2.30mm		◆	
11		0730 513 756		1	PLANET ÇAN DİŞLİ BİLYA SEK.	RETAINING RING	2.40mm		◆	
11		0730 513 755		1	PLANET ÇAN DİŞLİ BİLYA SEK.	RETAINING RING	2.50mm		◆	
12	K20.01133	0750 116 165	(0635 338 049)	1	PLANET ÇAN DİŞLİ BİLYASI	ROLLER BEARING	80.0X110.0X16.0mm		◆	
13	K20.01944	1304 332 210		1	PLANET ÇAN DİŞLİ 117 DİŞ	CARRIER HUB 117T	H=81.80		◆	
14		0730 505 053		1	ÇEMBER DİŞLİ SEGMANI	SPRING RING	2.00mm		◆	◆
15	K20.00230	1304 233 006	(1324 233 006)	1	TEPSİ SENKROMENÇ	FLANGE			◆	
			(1304 233 011)							
16	K20.00038	1296 333 045	(1296 333 022)	2	AĞIR SERİ SENK.FRENLEME	SYNCHRONIZING CONE			◆	
			(0769 174 091)							
17	K20.00185	1313 333 001		1	AĞIR SERİ YILDIZ DİŞLİ	GUIDE SLEEVE			◆	
18	K20.00471	1240 304 278		9	AĞIR SERİ YILDIZ DİŞ.FİŞEĞİ	PRESSURE PIECE			◆	
19	K20.00469	0732 040 385		9	AĞIR SERİ YILDIZ DİŞ.YAYI	SPRING			◆	
20	K20.00470	0732 040 386		9	AĞIR SERİ YILDIZ DİŞ.YAYI	SPRING			◆	
21	K20.00810	1272 298 934		kit	A.SERİ YIL.DİŞ.YAY FİŞEK TK.	REPAIR KIT			◆	
22		0630 501 175		1	AĞIR SERİ YILDIZ DİŞLİ SEK.	RETAINING RING	3.70mm		◆	
22		0630 501 174		1	AĞIR SERİ YILDIZ DİŞLİ SEK.	RETAINING RING	3.80mm		◆	
22		0630 501 173		1	AĞIR SERİ YILDIZ DİŞLİ SEK.	RETAINING RING	3.90mm		◆	
22		0630 501 061		1	AĞIR SERİ YILDIZ DİŞLİ SEK.	RETAINING RING	4.00mm		◆	
23	K20.00267	1304 333 011		1	AĞIR SERİ SENK.HALKA	ENGAGING SLEEVE			◆	
24	K20.00328	1272 334 003		2	AĞIR SERİ HİLAL PABUCU	SLIDING PAD			◆	◆
25		1304 334 063		1	AĞIR SERİ HİLALİ	GEAR SHIFT FORK			◆	
26		1304 334 077		1	AĞIR SERİ HİLAL MİLİ	GEAR SHIFT RAIL			◆	
27	K20.01017	0750 112 047		1	AĞIR SERİ HİLAL MİL KEÇESİ	FLANGE PACKING	22.0X36.0X14.5mm		◆	◆
28	K20.01018	0734 307 287		2	AĞIR SERİ HAVA KEÇESİ	SEALING RING	50.0X100.0X7.5mm		◆	
29	K20.02128	1315 334 041		1	AĞIR SERİ HİLAL MİL PİSTONU	PISTON			◆	
30	K20.01614	0750 112 096		1	AĞIR SERİ HİLAL MİL FİBERİ	GUIDE RING	100.2X88.4X4.8mm		◆	
31	K20.01774	0737 006 095		1	AĞIR SERİ HİLAL MİL SOMUNU	NUT	M16X1.5mm		◆	◆

NOTES :

X1,X2 are used conjunction with the encoded parts.

NOTLAR :

X1,X2 ile kodlanan parçalar birlikte kullanılır.

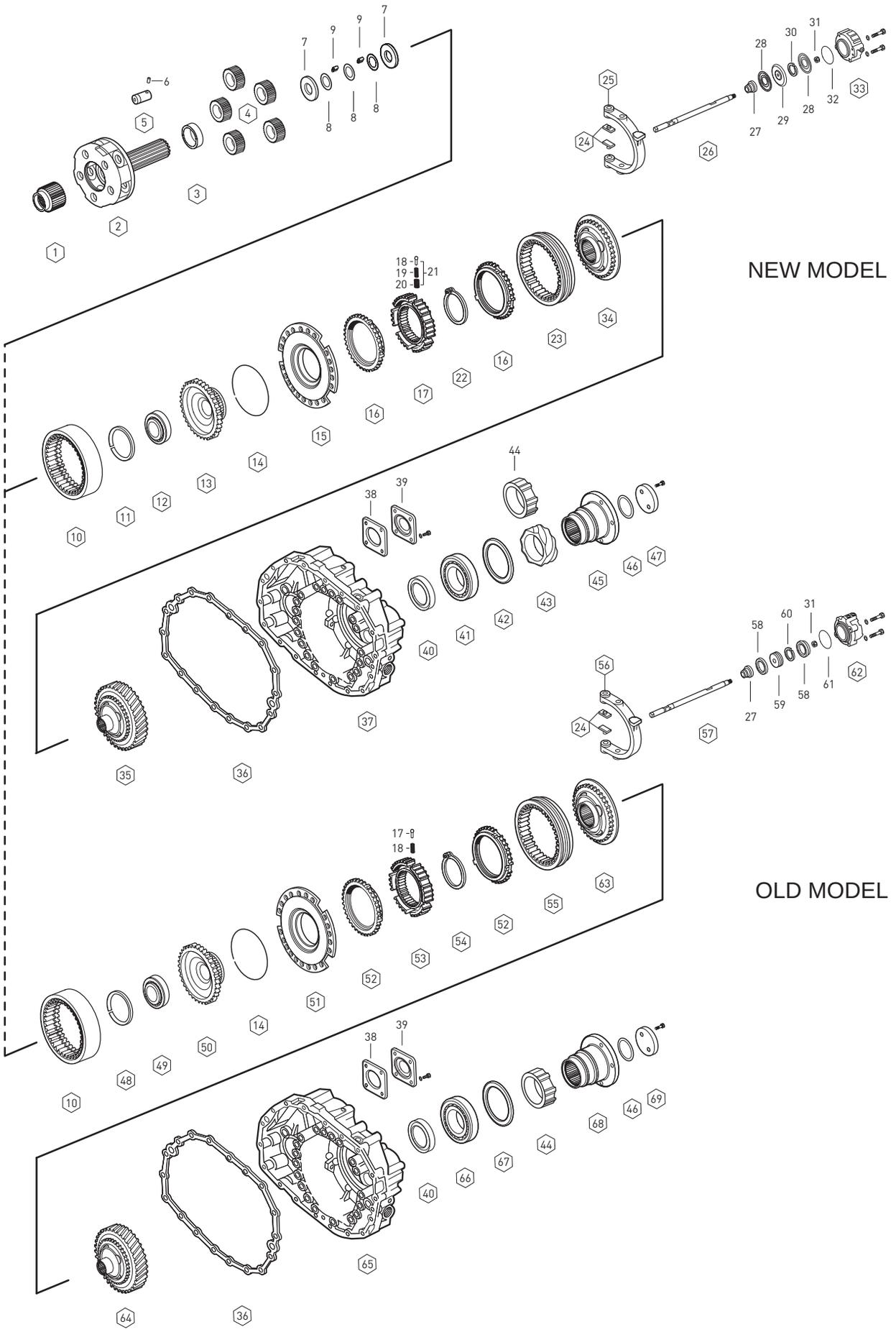

Original parts names, oem numbers, symbols and descriptions used in this catalogue are for reference purposes only.

Fig.	Kacmaz No.	Oem No	Oem Old No	Pcs.	Ürün Tanımı	Description	Sizes	Notes	(X1) : R.6,38-0,76	(X2) : R.8,73-1,00
32	K20.02135	0634 313 338		1	AĞIR SERİ SİLİNDİR ORİNGİ	O-RING	108.0X3.0mm		◆	
33	K20.00888	1304 334 079	(1304 334 073)	1	AĞIR SERİ SİLİNDİR GÖVDESİ	CYLINDER			◆	
34	K20.00231	1304 233 013	(1297 233 059)	1	SERİ SENKROMENÇ	ENGAGING RING			◆	
35	K20.00323	1304 232 085	(1304 232 083)	1	RETARDER DİŞLİSİ 55 DİŞ	RETARDER GEAR 55T			◆	
36		1304 301 063	(1304 301 030)	1	ŞANZ.ARKA GÖVDE CONTASI	GASKET			◆	◆
37		1304 301 381	(1304 301 321)	1	ŞANZIMAN ARKA GÖVDE	HOUSING			◆	
38	K20.02108	1238 308 201	(1238 308 166)	1	PTO BAĞLANTI KAPAK CONTASI	GASKET			◆	◆
39		1304 301 034		1	PTO BAĞLANTI KAPAĞI	COVER			◆	◆
40	K20.01012	0734 319 439		1	ŞANZIMAN FLANŞ KEÇESİ	OIL SEAL	95.0X115.0X10.0mm		◆	◆
40		0734 310 212		1	ŞANZIMAN FLANŞ KEÇESİ	OIL SEAL	105.0X125.0X12.0mm		◆	
41	K20.01156	0750 116 404	(0750 116 197)	1	ŞANZIMAN ARKA BİLYA	ROLLER BEARING	80.0X140.0X26.0mm		◆	
42	K20.01615	2049 309 535		1	ŞANZ.ARKA BİLYA RAYNELİ	SHIM	1.90mm		◆	
42	K20.01616	0730 006 534		1	ŞANZ.ARKA BİLYA RAYNELİ	SHIM	1.50mm		◆	
42	K20.01617	2001617		1	ŞANZ.ARKA BİLYA RAYNELİ	SHIM	0.30mm		◆	
42	K20.01618	2001618		1	ŞANZ.ARKA BİLYA RAYNELİ	SHIM	0.20mm		◆	
42	K20.01619	2001619		1	ŞANZ.ARKA BİLYA RAYNELİ	SHIM	0.10mm		◆	
43		1304 338 020		1	ŞANZ.KİLOMETRE DİŞLİSİ	SPEEDOMETER GEAR			◆	
44		1304 332 147		1	ŞANZ.KİLOMETRE DEVİR SACI	PULSE DISK			◆	◆
45		1304 338 019		1	ŞANZIMAN FLANŞI	COMP.FLANGE	8-H, Ø165mm		◆	
45	K20.00340	1304 338 097		1	ŞANZIMAN FLANŞI	COMP.FLANGE	4-H, Ø180mm		◆	
45		1304 343 053		1	ŞANZIMAN FLANŞI	COMP.FLANGE			◆	
45		1304 343 051		1	ŞANZIMAN FLANŞI	COMP.FLANGE			◆	
46	K20.02136	0634 313 223		1	ŞANZIMAN FLANŞ ORİNGİ	O-RING			◆	◆
47	K20.01620	1304 338 072		1	ŞANZIMAN FLANŞ PULU	WASHER			◆	
48		0630 513 191		1	PLANET ÇAN DİŞLİ BİLYA SEK.	RETAINING RING	2.00mm			◆
48		0630 513 190		1	PLANET ÇAN DİŞLİ BİLYA SEK.	RETAINING RING	2.10mm			◆
48		0630 513 189		1	PLANET ÇAN DİŞLİ BİLYA SEK.	RETAINING RING	2.20mm			◆
48		0630 513 188		1	PLANET ÇAN DİŞLİ BİLYA SEK.	RETAINING RING	2.30mm			◆
48		0630 513 187		1	PLANET ÇAN DİŞLİ BİLYA SEK.	RETAINING RING	2.40mm			◆
48		0630 513 073		1	PLANET ÇAN DİŞLİ BİLYA SEK.	RETAINING RING	2.50mm			◆
49	K20.01334	0735 340 080	(0635 338 028)	1	PLANET ÇAN DİŞLİ BİLYASI	ROLLER BEARING	70.0X90.0X10.0mm			◆
50	K20.01945	1304 332 071		1	PLANET ÇAN DİŞLİ 117 DİŞ	CARRIER HUB 117T				◆
51	K20.00229	1304 233 005	(1304 233 004)	1	TEPSİ SENKROMENÇ	FLANGE				◆
52	K20.00268	1304 333 005	(1304 333 021)	2	AĞIR SERİ SENK.FRENLEME	SYNCHRONIZING CONE				◆
53	K20.00265	1304 332 066		1	AĞIR SERİ YILDIZ DİŞLİ	GUIDE SLEEVE				◆
54		0630 501 385		1	AĞIR SERİ YILDIZ DİŞLİ SEK.	RETAINING RING	2.90mm			◆
54		0630 501 056		1	AĞIR SERİ YILDIZ DİŞLİ SEK.	RETAINING RING	3.00mm			◆
54		0630 501 152		1	AĞIR SERİ YILDIZ DİŞLİ SEK.	RETAINING RING	3.10mm			◆
54		0630 501 141		1	AĞIR SERİ YILDIZ DİŞLİ SEK.	RETAINING RING	3.20mm			◆
55	K20.00264	1304 332 089	(1304 332 065)	1	AĞIR SERİ SENK.HALKA	ENGAGING SLEEVE				◆
56	K20.00888	1304 334 039	(1304 334 073)	1	AĞIR SERİ HİLALİ	GEAR SHIFT FORK				◆

NOTES :

X1,X2 are used conjunction with the encoded parts.

NOTLAR :

X1,X2 ile kodlanan parçalar birlikte kullanılır.

Original parts names, oem numbers, symbols and descriptions used in this catalogue are for reference purposes only.

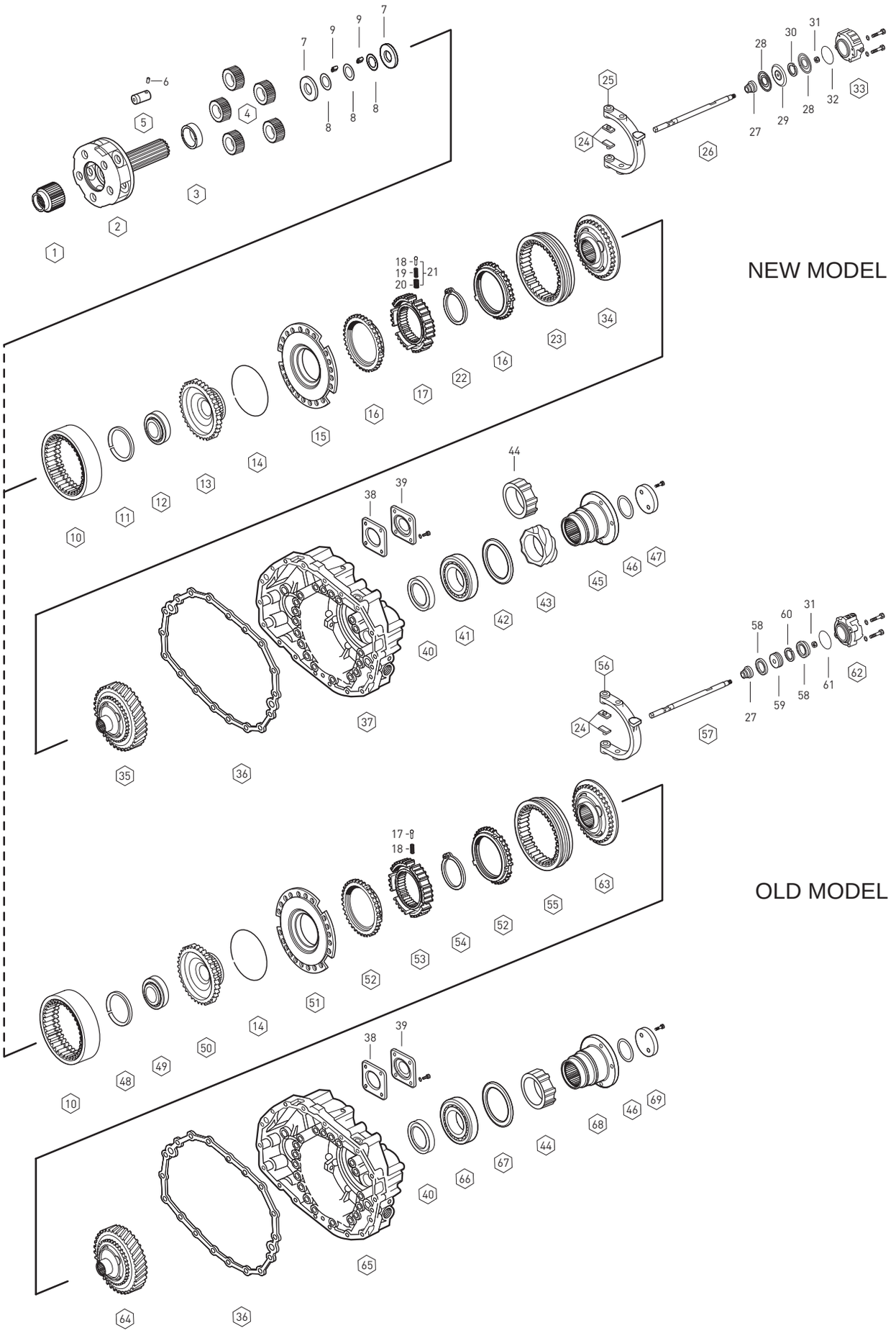

Original parts names, oem numbers, symbols and descriptions used in this catalogue are for reference purposes only.

Fig.	Kacmaz No.	Oem No	Oem Old No	Pcs.	Ürün Tanımı	Description	Sizes	Notes	(X1) : R.6,38-0,76	(X2) : R.8,73-1,00
57		1304 334 052		1	AĞIR SERİ HİLAL MİLİ	GEAR SHIFT RAIL				◆
58	K20.01023	0734 307 296	(0750 112 049)	2	AĞIR SERİ HAVA KEÇESİ	RING	74.0X84.0X5.0mm			◆
59		1304 334 072	(1304 334 014)	1	AĞIR SERİ HİLAL MİL PİSTONU	PISTON				◆
60	K20.01621	0750 145 003		1	AĞIR SERİ HİLAL MİL FİBERİ	GUIDE RING	78.0X82.7X5.5mm			◆
61		0634 313 232		1	AĞIR SERİ SİLİNDİR ORİNGİ	O-RING	95.0X2.0mm			◆
62		1304 334 061	(1304 334 037)	1	AĞIR SERİ SİLİNDİR GÖVDESİ	CYLINDER				◆
63	K20.00266	1304 332 075		1	SERİ SENKROMENÇ	ENGAGING RING				◆
64	K20.01947	1304 313 133		1	RETARDER DİŞLİSİ 35 DİŞ	RETARDER GEAR 35T				◆
65		1304 301 360	(1304 301 316)	1	ŞANZIMAN ARKA GÖVDE	HOUSING				◆
66	K20.01129	0750 116 048	(0735 330 137)	1	ŞANZIMAN ARKA BİLYA	ROLLER BEARING	78.0X130.0X25.0mm			◆
67		0730 002 549		1	ŞANZ.ARKA BİLYA RAYNELİ	SHIM	1.30mm			◆
67		0730 002 548		1	ŞANZ.ARKA BİLYA RAYNELİ	SHIM	1.40mm			◆
67		0730 002 547		1	ŞANZ.ARKA BİLYA RAYNELİ	SHIM	1.50mm			◆
67	K20.01622	0730 002 546		1	ŞANZ.ARKA BİLYA RAYNELİ	SHIM	1.60mm			◆
67		0730 002 545		1	ŞANZ.ARKA BİLYA RAYNELİ	SHIM	1.70mm			◆
67		0730 002 544		1	ŞANZ.ARKA BİLYA RAYNELİ	SHIM	1.80mm			◆
67		0730 002 543		1	ŞANZ.ARKA BİLYA RAYNELİ	SHIM	1.90mm			◆
68		0501 313 792		1	ŞANZIMAN FLANŞI	COMP.FLANGE				◆
68		1304 338 069		1	ŞANZIMAN FLANŞI	COMP.FLANGE	4-H, Ø180mm			◆
68		1304 338 037		1	ŞANZIMAN FLANŞI	COMP.FLANGE	4-H, Ø165mm			◆
69	K20.01626	1304 338 045		1	ŞANZIMAN FLANŞ PULU	WASHER				◆

NOTES :

X1,X2 are used conjunction with the encoded parts.

NOTLAR :

X1,X2 ile kodlanan parçalar birlikte kullanılır.

SYNCHRONIZER KIT 1st/2nd

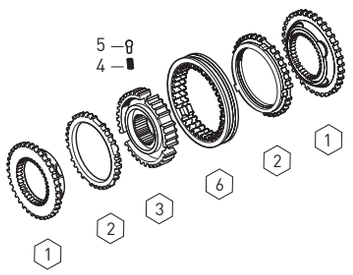

Fig.	Kacmaz No.	Oem No	Oem Old No	Pcs.	Ürün Tanımı	Description
	K20.00912	1304 298 964		Kit	1./2.VİT.SENKROMENÇ KİT	SYNCH.KIT 1st/2nd.
1	K20.00837	1311 304 015		2	1./2.VİT.SENKROMENÇ	ENGAGING RING
2	K20.00781	1268 304 594	(1268 304 445)	2	1./ 2.VİT.SENK.FRENLEME	SYNCH.CONE
3	K20.00913	1304 304 576		1	1./ 2.VİT.YILDIZ DİŞLİ	GUIDE SLEEVE
4	K20.00110	0732 040 409		3	1./ 2.VİT.YILDIZ DİŞ.YAYI	SPRING
5	K20.00111	1297 304 436		3	1./ 2.VİT.YILDIZ DİŞ.FİŞEĞİ	PRESSURE PIECE
6	K20.00255	1304 304 597	(1304 304 541)	1	1./ 2.VİT.SENK.HALKA	ENGAGING SLEEVE

SYNCHRONIZER KIT 3rd/Const.

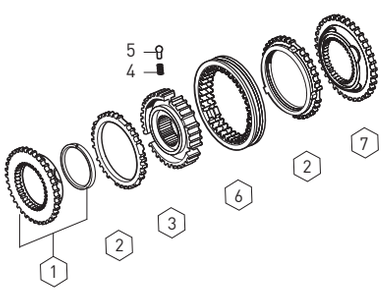

Fig.	Kacmaz No.	Oem No	Oem Old No	Pcs.	Ürün Tanımı	Description
	K20.00914	1304 298 965		Kit	PRİZ./3.VİT.SENKROMENÇ KİT	SYNCH.KIT 3rd/Const.
1	K20.00915	1304 202 214		1	PRİZ.VE 3.VİT.SENKROMENÇ	ENGAGING RING
2	K20.00916	1311 304 255		2	PRİZ.VE 3.VİT.FRENLEME	SYNCH.CONE
3	K20.00917	1304 304 651		1	PRİZ.VE 3.VİT.YILDIZ DİŞLİ	GUIDE SLEEVE
4	K20.00110	0732 040 409		3	3.VİT.YILDIZ DİŞLİ YAYI	SPRING
5	K20.00111	1297 304 436		3	3.VİT.YILDIZ DİŞLİ FİŞEĞİ	PRESSURE PIECE
6	K20.00918	1304 304 664		1	PRİZ.VE 3.VİT.SENK.HALKA	ENGAGING SLEEVE
7	K20.00919	1304 302 425		1	PRİZ.VE 3.VİT.SENKROMENÇ	ENGAGING RING

SYNCHRONIZER KIT 1st/2nd

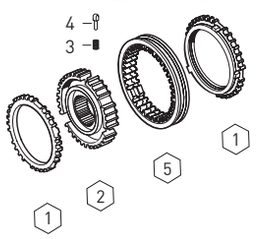

Fig.	Kacmaz No.	Oem No	Oem Old No	Pcs.	Ürün Tanımı	Description
	K20.00920	1304 204 040		Kit	1./2.VİT.SENKROMENÇ KİT	SYNCH.KIT 1st/2nd.
1	K20.00781	1268 304 594	(1268 304 445)	2	1./ 2.VİT.SENK.FRENLEME	SYNCH.CONE
2	K20.00913	1304 304 576		1	1./ 2.VİT.YILDIZ DİŞLİ	GUIDE SLEEVE
3	K20.00110	0732 040 409		3	1./ 2.VİT.YILDIZ DİŞ.YAYI	SPRING
4	K20.00111	1297 304 436		3	1./ 2.VİT.YILDIZ DİŞ.FİŞEĞİ	PRESSURE PIECE
5	K20.00255	1304 304 597	(1304 304 541)	1	1./ 2.VİT.SENK.HALKA	ENGAGING SLEEVE

SYNCHRONIZER KIT 3rd/Const.

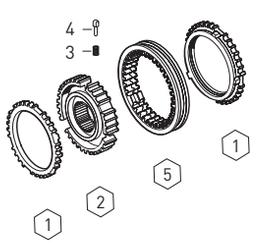

Fig.	Kacmaz No.	Oem No	Oem Old No	Pcs.	Ürün Tanımı	Description
	K20.00921	1304 204 056		Kit	PRİZ./3.VİT.SENKROMENÇ KİT	SYNCH.KIT 3rd/Const.
1	K20.00916	1311 304 255		2	PRİZ./3.VİT.SENKROMENÇ	ENGAGING RING
2	K20.00917	1304 304 651		1	PRİZ./3.VİT.YILDIZ DİŞLİ	GUIDE SLEEVE
3	K20.00110	0732 040 409		3	PRİZ./3.VİT.YILDIZ DİŞ.YAYI	SPRING
4	K20.00111	1297 304 436		3	PRİZ./3.VİT.YILDIZ DİŞ.FİŞEĞİ	PRESSURE PIECE
5	K20.00918	1304 304 664		1	PRİZ./3.VİT.SENK.HALKA	ENGAGING SLEEVE

Original parts names, oem numbers, symbols and descriptions used in this catalogue are for reference purposes only.

Fig.	Kacmaz No.	Oem No	Oem Old No	Pcs.	Ürün Tanımı	Description	Sizes
	K20.02150	1304 298 939		Kit	KEÇE TAKIMI	SEAL KIT	
1	K20.01037	0634 300 302		1	YAĞ KEÇESİ	OIL SEAL	25X35X7mm
2	K20.01036	0634 307 367		1	YAĞ KEÇESİ	OIL SEAL	25X35X7/10mm
3	K20.01008	0734 310 104		1	PRİZDİREK KEÇESİ	OIL SEAL	52X68X8mm
4	K20.01012	0734 319 439		2	ŞAFT FLANŞ KEÇESİ	OIL SEAL	95X115X10mm

GEARBOX GASKET KIT

GEARBOX GASKET KIT

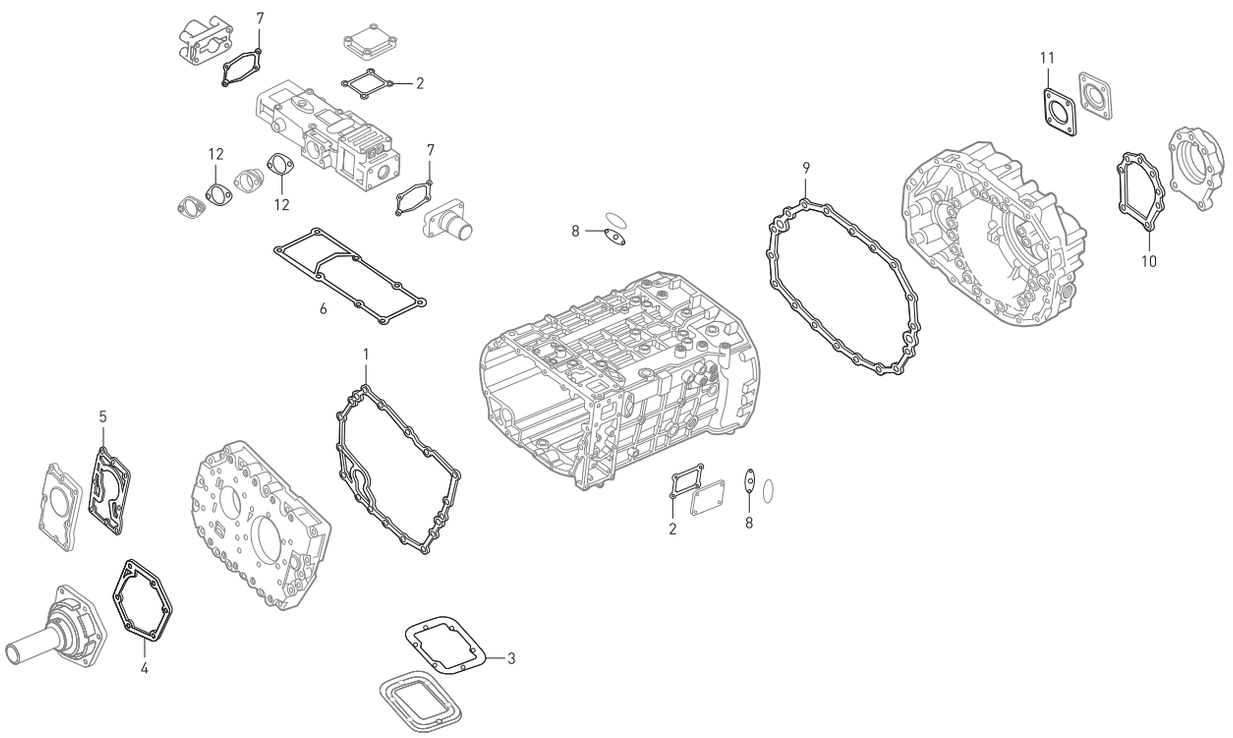

Fig.	Kacmaz No.	Oem No	Oem Old No	Pcs.	Ürün Tanımı	Description
	K20.01583	1304 298 914	(1304 298 902)	Kit	ŞANZIMAN CONTA TAKIMI	GASKET KIT
1		0501 313 379		1	ŞANZ.ÖN KAPAK CONTASI	GASKET
2		1304 307 437	(1304 307 176)	2	ŞANZ.KULE BAĞ.KAPAK CONTASI	GASKET
3		1290 301 140	(1290 301 073)	1	ŞANZ.DAMPER CONTASI	GASKET
4		0501 316 990	(0501 313 678)	1	PRİZ.KEÇE KAPAK CONTASI	GASKET
5		1304 303 297		1	YAĞ POMPA CONTASI	GASKET
6		1304 307 338		1	ŞANZ.KULE ALT CONTASI	GASKET
7		0501 318 308	(1304 307 177)	2	ŞANZ.KULE KAPAK CONTASI	GASKET
8		1268 307 170	(1268 307 091)	2	ŞANZ.MÜŞÜR KAPAK CONTASI	GASKET
9		1304 301 063	(1304 301 030)	1	ŞANZ.ARKA GÖVDE CONTASI	GASKET
10		1304 301 109	(1304 301 021)	1	ŞANZ.ARKA KEÇE KAPAK CONTASI	GASKET
11	K20.02108	1238 308 201	(1238 308 166)	1	PTO BAĞLANTI KAPAK CONTASI	GASKET
12		1304 207 277	(1304 307 196)	2	ŞANZ.İSTİNAT KAPAK CONTASI	GASKET

Original parts names, oem numbers, symbols and descriptions used in this catalogue are for reference purposes only.

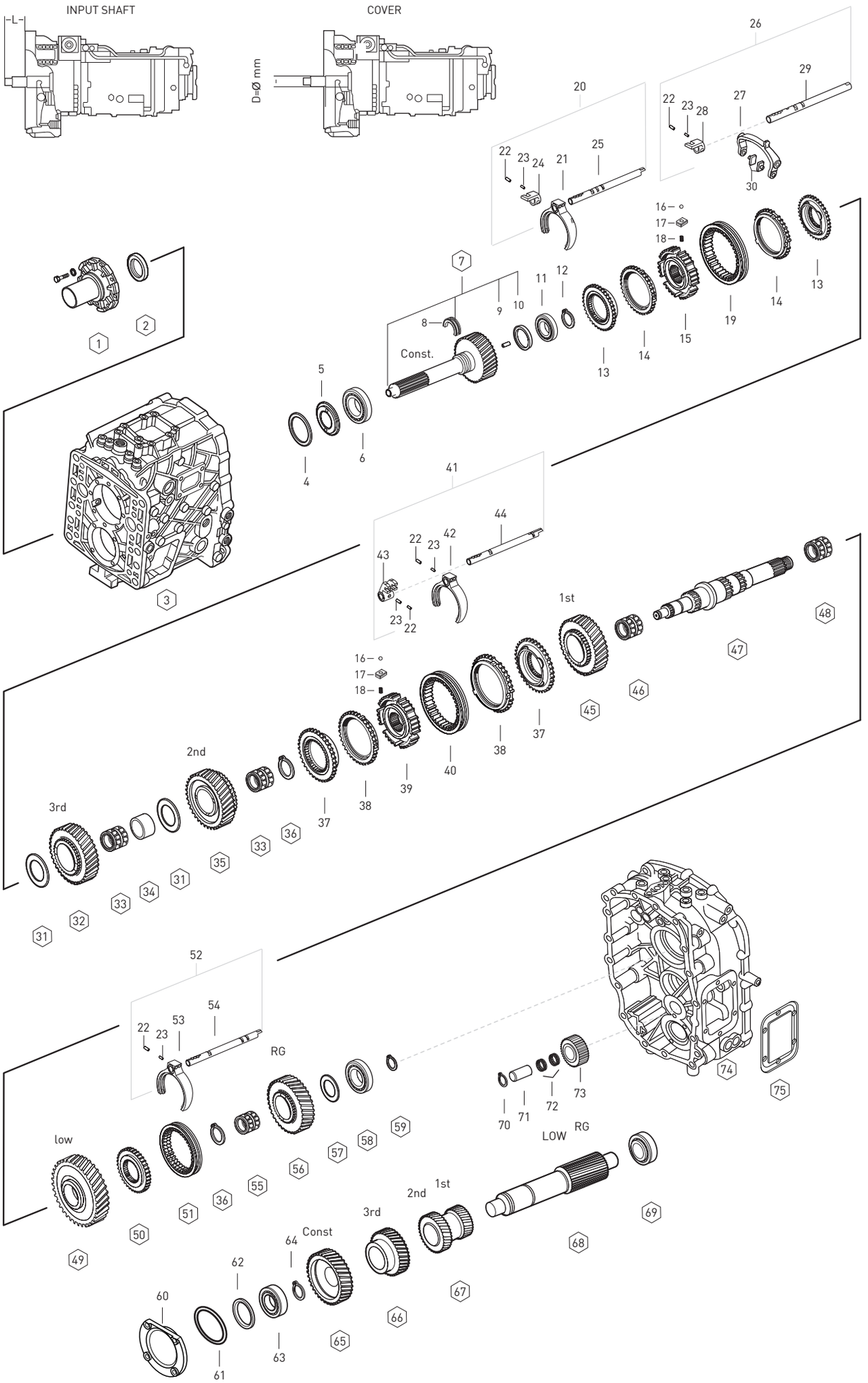

Original parts names, oem numbers, symbols and descriptions used in this catalogue are for reference purposes only.

Fig.	Kacmaz No.	Oem No	Oem Old No	Pcs.	Ürün Tanımı	Description	Sizes	Notes	(X1):DG 13.16-1.00	(X2):SG 9.56-0.73	(X3):SG 6.47-0.73
1	K20.00726	1308 302 041		1	PRİZDİREK KEÇE KAPAĞI	COVER	L=170 D=57	(B) (A)	◆	◆	◆
1	K20.00729	1308 302 053		1	PRİZDİREK KEÇE KAPAĞI	COVER	L=156 D=54	(M)	◆	◆	
1		1308 302 050		1	PRİZDİREK KEÇE KAPAĞI	COVER		(V)	◆		
1		1308 302 052		1	PRİZDİREK KEÇE KAPAĞI	COVER		(IS)	◆		
1		1308 302 083		1	PRİZDİREK KEÇE KAPAĞI	COVER		(S)	◆		
1	K20.00727	1308 302 084		1	PRİZDİREK KEÇE KAPAĞI	COVER		(F)	◆		
1	K20.00728	1308 302 044		1	PRİZDİREK KEÇE KAPAĞI	COVER	L=147 D=57	(A)			◆
1		1308 302 057		1	PRİZDİREK KEÇE KAPAĞI	COVER		(D)	◆		
1		1308 302 122		1	PRİZDİREK KEÇE KAPAĞI	COVER		(IV)	◆		
2	K20.01001	0750 111 149	(0734 310 161)	1	PRİZDİREK KEÇESİ	OIL SEAL	48.0X65.0X10.0mm		◆	◆	◆
3		1308 201 108	(1308 201 098)	1	ŞANZIMAN ÖN GÖVDE	HOUSING	Old Type		◆	◆	◆
3		1308 201 105		1	ŞANZIMAN ÖN GÖVDE	HOUSING	New Type		◆	◆	◆
4	K20.01709	0730 005 494		1	PRİZ.ÖN BİLYA RAYNELİ	SHIM	1.90mm		◆	◆	◆
4	K20.01710	0730 005 486		1	PRİZ.ÖN BİLYA RAYNELİ	SHIM	1.50mm		◆	◆	◆
4	K20.01711	0730 006 543		1	PRİZ.ÖN BİLYA RAYNELİ	SHIM	1.10mm		◆	◆	◆
4	K20.01712	0730 006 541		1	PRİZ.ÖN BİLYA RAYNELİ	SHIM	1.05mm		◆	◆	◆
4	K20.01713	0730 007 361		1	PRİZ.ÖN BİLYA RAYNELİ	SHIM	0.70mm		◆	◆	◆
4	K20.01715	2001715		1	PRİZ.ÖN BİLYA RAYNELİ	SHIM	0.30mm		◆	◆	◆
4	K20.01716	2001716		1	PRİZ.ÖN BİLYA RAYNELİ	SHIM	0.20mm		◆	◆	◆
4	K20.01717	2001717		1	PRİZ.ÖN BİLYA RAYNELİ	SHIM	0.10mm		◆	◆	◆
5		1308 302 124	(1308 302 029)	1	PRİZ.YAĞ PULU SACI	DIAPHRAGM			◆	◆	◆
6	K20.01136	0735 300 740	(0750 117 312)	1	PRİZDİREK ÖN BİLYA	ROLLER BEARING	50.8X104.7X30.1mm		◆	◆	◆
7	K20.00730	1308 202 050	(1308 302 094)	1	PRİZDİREK 26 DİŞ	INPUT SHAFT 26T		(B)	◆		
7	K20.00839	1308 202 052	(1308 202 038)	1	PRİZDİREK 26 DİŞ	INPUT SHAFT 26T		(M) (A)	◆		
7	K20.00732	1308 202 048	(1308 302 034)	1	PRİZDİREK 26 DİŞ	INPUT SHAFT 26T		(V) (L) (A)	◆		
7	K20.00731	1308 202 064	(1308 302 114)	1	PRİZDİREK 26 DİŞ	INPUT SHAFT 26T		(F)	◆		
7	K20.00733	1308 202 051	(1308 202 037)	1	PRİZDİREK 26 DİŞ	INPUT SHAFT 26T		(IS)	◆		
7		1308 202 063		1	PRİZDİREK 26 DİŞ	INPUT SHAFT 26T		(S)	◆		
7		1308 202 054		1	PRİZDİREK	INPUT SHAFT		(D)			◆
7		1308 202 057		1	PRİZDİREK	INPUT SHAFT		(M)		◆	
8	K20.01730	1308 302 107		1	PRİZDİREK YAĞ KOLLEKTÖRÜ	SEAL BAFFLE			◆	◆	◆
9	K20.01731	0631 329 064		1	PRİZDİREK YAĞ BORUSU	PIN			◆	◆	◆
10	K20.01010	0501 311 146		1	PRİZDİREK ARKA KEÇE	OIL SEAL			◆	◆	◆
11	K20.01145	1307 203 019	(1307 203 010)	1	KAMALI MİL UÇ BİLYA	ROLLER BEARING			◆	◆	◆
12		0730 501 399		1	KAMALI MİL UÇ BİLYA SEK.	RETAINING RING	2.50mm		◆	◆	◆
12		0730 501 501		1	KAMALI MİL UÇ BİLYA SEK.	RETAINING RING	3.00mm		◆	◆	◆
13	K20.00734	1308 304 078		2	PRİZ.-3.VİT.SENKROMENÇ	ENGAGING RING			◆	◆	◆
14	K20.00735	1308 304 097	(1308 304 095)	2	PRİZ.-3.VİT.SENK.FRENLEME	SYNCHRONIZING CONE			◆	◆	◆
			(1308 304 072)								
15	K20.00736	1308 304 111	(1307 304 607)	1	PRİZ.-3.VİT.YILDIZ DİŞLİ	GUIDE SLEEVE			◆	◆	◆
			(1307 304 168)								

NOTES :

Alphabetical Coding has been done according to Input Shaft
X1,X2,X3 are used conjunction with the encoded parts.

NOTLAR :

Alfabetik kodlamalar prizdireklere göre yapılmıştır.
X1,X2,X3 ile kodlanan parçalar birlikte kullanılır.

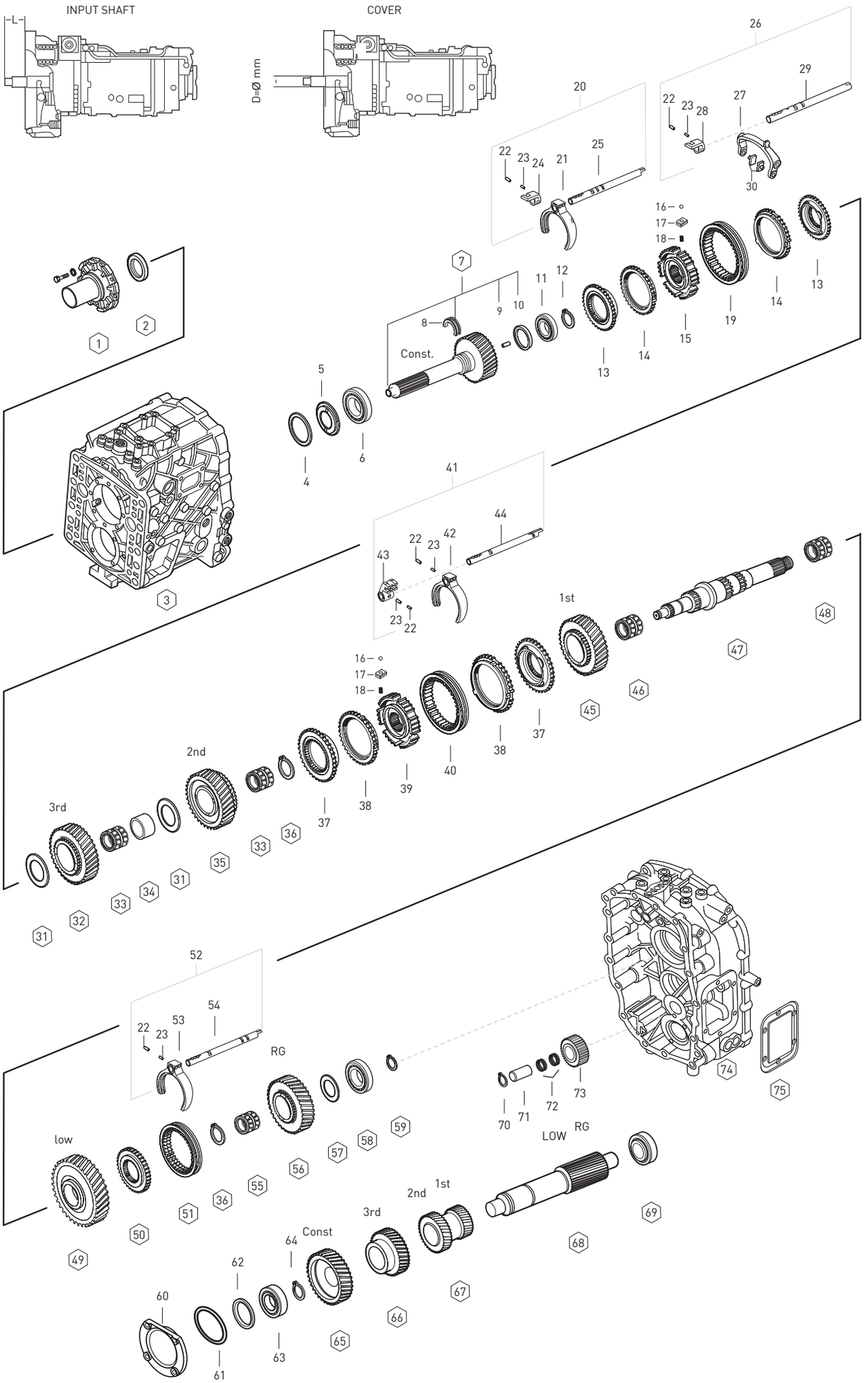

Original parts names, oem numbers, symbols and descriptions used in this catalogue are for reference purposes only.

Fig.	Kacmaz No.	Oem No	Oem Old No	Pcs.	Ürün Tanımı	Description	Sizes	Notes	(X1):DG 13.16-1.00	(X2):SG 9.56-0.73	(X3):SG 6.47-0.73
16	K20.01457	0635 460 010		6	1./2.-3.VİT.YILDIZ DİŞLİ BİLYASI	BALL			◆	◆	◆
17	K20.00738	1307 304 156		6	1./2.-3.VİT.YILDIZ DİŞLİ FİŞEĞİ	PRESSURE PIECE			◆	◆	◆
18	K20.00737	0732 041 571		6	1./2.-3.VİT.YILDIZ DİŞLİ YAYI	SPRING			◆	◆	◆
19	K20.00739	1308 304 090	(1308 304 076)	1	PRİZ./3.VİT.SENK.HALKA	ENGAGING SLEEVE			◆	◆	◆
20	K20.00742	1308 206 054		1	PRİZ.-3.VİTES HİLALİ KOMPLE	GEAR SHIFT FORK ASSY.	New Type		◆	◆	◆
20		1308 206 048		1	PRİZ.-3.VİTES HİLALİ KOMPLE	GEAR SHIFT FORK ASSY.	Old Type		◆	◆	◆
21	K20.00741	1308 306 081	(1308 306 038)	1	PRİZ.-3.VİTES HİLALİ	GEAR SHIFT FORK Const./3rd			◆	◆	◆
22	K20.01719	0631 329 028		8	3.-2.-1.R-C.VİTES HİLAL PİMİ	SLOT.PIN	3.5X30.0mm		◆	◆	◆
23	K20.01718	0631 329 069		8	PRİZ.-3.VİTES HİLAL PİMİ	SLOT.PIN	6.0X30.0mm		◆	◆	◆
24		1308 306 032		1	PRİZ.-3.VİT.HİLAL MİL SÜRÜCÜ	DRIVER			◆	◆	◆
25	K20.00740	1308 306 070		1	PRİZ.-3.VİTES HİLAL MİLİ	GEAR SHIFT FORK RAIL	New Type		◆	◆	◆
25		1308 306 050		1	PRİZ.-3.VİTES HİLAL MİLİ	GEAR SHIFT FORK RAIL	Old Type		◆	◆	◆
26	K20.00746	1308 206 055		1	PRİZ.-3.VİTES HİLALİ KOMPLE	GEAR SHIFT FORK ASSY.			◆	◆	◆
27	K20.00744	1308 306 121	(1308 306 063)	1	PRİZ.-3.VİTES HİLALİ	GEAR SHIFT FORK Const./3rd			◆	◆	◆
28		1308 306 032		1	PRİZ.-3.VİT.HİLAL MİL SÜRÜCÜ	DRIVER			◆	◆	◆
29	K20.00745	1308 306 082		1	PRİZ.-3.VİTES HİLAL MİLİ	GEAR SHIFT FORK RAIL			◆	◆	◆
30	K20.00743	1306 306 050	(1306 306 032)	2	PRİZ.-3.VİTES HİLAL PABUCU	SLIDING PAD			◆	◆	◆
31	K20.01720	0730 108 172		2	PRİZ.-2./3.VİT.DİŞLİ PULU	THRUST WASHER	4.15mm		◆	◆	◆
32	K20.00747	1308 304 064		1	3.VİTES DİŞLİSİ 30 DİŞ	GEAR 3rd 30 T			◆		
32	K20.00748	1308 304 063		1	3.VİTES DİŞLİSİ 26 DİŞ	GEAR 3rd 26 T				◆	◆
33	K20.01345	0750 115 995	(0735 321 494)	2	2./3.VİTES MASURA BİLYA	NEEDLE CAGE	60.0X68.0X41.6mm		◆	◆	◆
34	K20.00749	0730 162 428		1	3.VİTES MAS.BİLYA ÇANAĞI	BEARING RACE	42.30mm		◆	◆	◆
35	K20.00750	1308 304 054		1	2.VİTES DİŞLİSİ 30 DİŞ	GEAR 2nd 30 T			◆	◆	◆
36		0730 501 409		2	GERİ/2.VİT.MAS.BİLYA SEK.	RETAINING RING	2.50mm		◆	◆	◆
36		0730 501 418		2	GERİ/2.VİT.MAS.BİLYA SEK.	RETAINING RING	2.80mm		◆	◆	◆
37	K20.00751	1308 304 077		2	1./2.VİT.SENKROMENÇ	ENGAGING RING			◆	◆	◆
38	K20.00752	1308 304 096	(1308 304 094)	2	1./2.VİT.SENK.FRENLEME	SYNCHRONIZING CONE			◆	◆	◆
			(1308 304 070)								
39	K20.00753	1308 304 110	(1307 304 608)	1	1./2.VİT.YILDIZ DİŞLİ	GUIDE SLEEVE			◆	◆	◆
			(1307 304 166)								
40	K20.00754	1308 304 091	(1308 304 074)	1	1./2.VİT.SENK.HALKA	ENGAGING SLEEVE			◆	◆	◆
41	K20.00757	1308 206 061		1	1.-2.VİTES HİLALİ KOMPLE	GEAR SHIFT FORK ASSY.	New Type		◆	◆	◆
41		1308 206 042		1	1.-2.VİTES HİLALİ KOMPLE	GEAR SHIFT FORK ASSY.	Old Type		◆	◆	◆
42	K20.00756	1308 306 037		1	1./2.VİTES HİLALİ	GEAR SHIFT FORK 1st/2nd			◆	◆	◆
43		1308 306 024		1	1-2.VİT.HİLAL MİL SÜRÜCÜ	DRIVER			◆	◆	◆
44	K20.00755	1308 306 072		1	1./2.VİTES HİLAL MİLİ	GEAR SHIFT FORK RAIL	New Type		◆	◆	◆
44		1308 306 051		1	1./2.VİTES HİLAL MİLİ	GEAR SHIFT FORK RAIL	Old Type		◆	◆	◆
45	K20.00758	1308 304 057		1	1.VİTES DİŞLİSİ 34 DİŞ	GEAR 1st 34 T			◆	◆	◆
46	K20.01346	0750 115 994	(0735 321 012)	1	1.VİTES MASURA BİLYA	NEEDLE CAGE	67.0X75.0X44.0mm		◆	◆	◆
47	K20.00759	1308 304 053		1	KAMALI MİL	MAIN SHAFT			◆	◆	◆
48	K20.01347	0750 115 427		1	C VİTES MASURA BİLYA	NEEDLE CAGE	67.0X75.0X37.0mm		◆	◆	◆

NOTES :

Alphabetical Coding has been done according to Input Shaft
X1,X2,X3 are used conjunction with the encoded parts.

NOTLAR :

Alfabetik kodlamalar prizdireklere göre yapılmıştır.
X1,X2,X3 ile kodlanan parçalar birlikte kullanılır.

Original parts names, oem numbers, symbols and descriptions used in this catalogue are for reference purposes only.

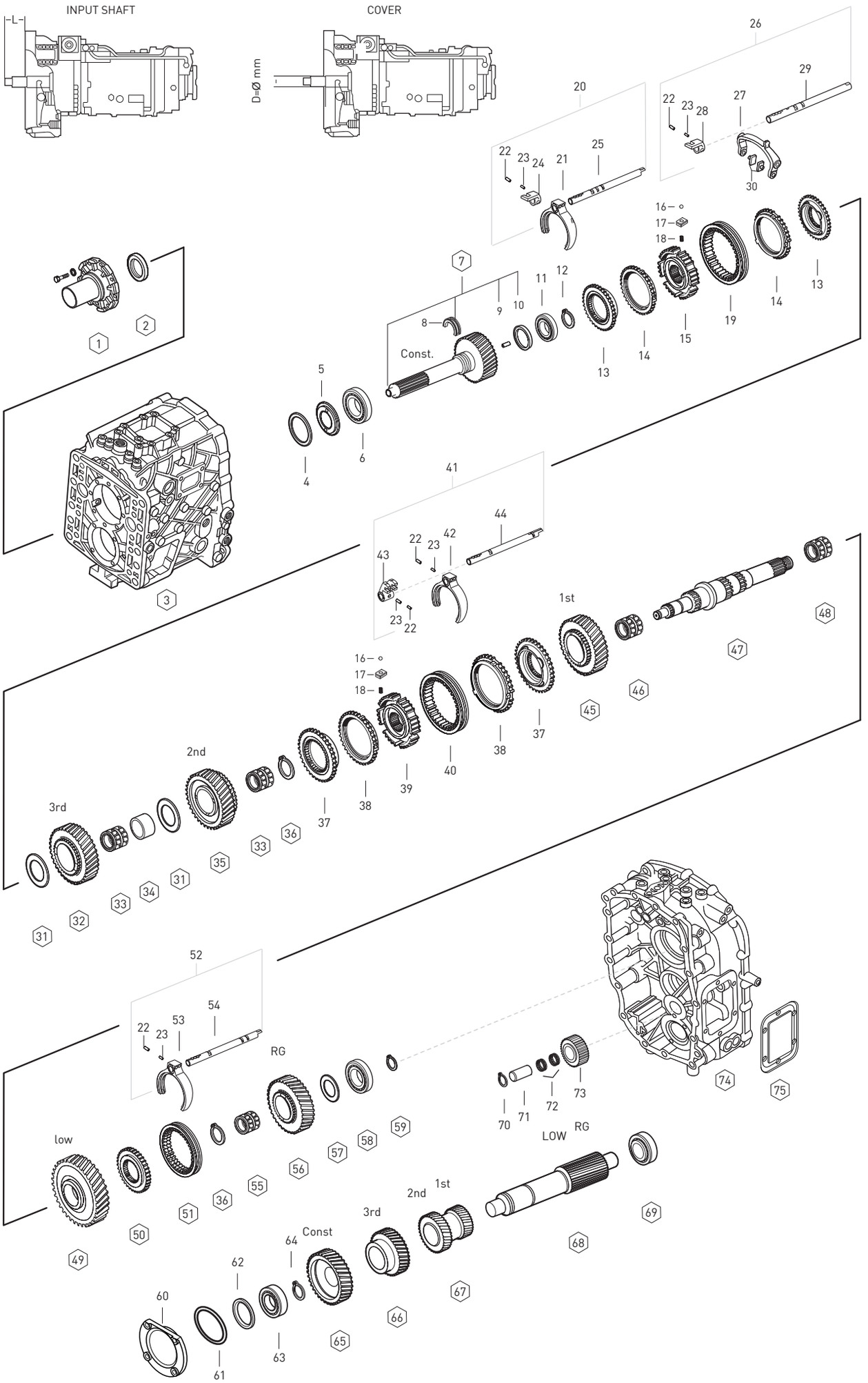

Original parts names, oem numbers, symbols and descriptions used in this catalogue are for reference purposes only.

Fig.	Kacmaz No.	Oem No	Oem Old No	Pcs.	Ürün Tanımı	Description	Sizes	Notes	(X1):DG 13.16-1.00	(X2):SG 9.56-0.73	(X3):SG 6.47-0.73
49	K20.00760	1308 304 086		1	C VİTES DİŞLİSİ 37 DİŞ	GEAR CRAWLING GEAR			◆	◆	◆
50	K20.00761	1308 304 051		1	GERİ VİTES YILDIZ DİŞLİ	GUIDE SLEEVE			◆	◆	◆
51	K20.00762	1308 304 087		1	GERİ VİTES HALKASI	ENGAGING SLEEVE			◆	◆	◆
52	K20.00765	1308 206 060		1	GERİ VİTES HİLALİ KOMPLE	GEAR SHIFT FORK ASSY.	New Type		◆	◆	◆
52		1308 206 043		1	GERİ VİTES HİLALİ KOMPLE	GEAR SHIFT FORK ASSY.	Old Type		◆	◆	◆
53	K20.00764	1308 306 067	(1308 306 035)	1	GERİ VİTES HİLALİ	GEAR SHIFT FORK / RG			◆	◆	◆
54	K20.00763	1308 306 071		1	GERİ VİTES HİLAL MİLİ	GEAR SHIFT FORK RAIL	New Type		◆	◆	◆
54		1308 306 057		1	GERİ VİTES HİLAL MİLİ	GEAR SHIFT FORK RAIL	Old Type		◆	◆	◆
55	K20.01348	0750 115 533	(0750 115 298)	1	GERİ VİTES MASURA BİLYA	NEEDLE CAGE	60.0X68.0X31.3mm		◆	◆	◆
56	K20.00766	1308 304 052		1	GERİ VİTES DİŞLİSİ 33 DİŞ	REVERSE GEAR 33 T			◆	◆	◆
57	K20.01721	0730 106 496		1	K.MİL ARKA BİLYA PULU	THRUST WASHER	4.00mm		◆	◆	◆
58	K20.01146	0735 300 511	(1246 203 008)	1	KAMALI MİL ARKA BİLYA	ROLLER BEARING			◆	◆	◆
59		0630 531 058		1	GÜNEŞ DİŞLİ SEGMANI	RETAINING RING	3.00mm		◆	◆	◆
59		0730 501 499		1	GÜNEŞ DİŞLİ SEGMANI	RETAINING RING	3.50mm		◆	◆	◆
60		1308 301 175		1	GRUP MİLİ ÖN BİLYA KAPAĞI	COVER			◆	◆	◆
61		0634 303 121		1	G.MİLİ ÖN BİLYA KAPAK ORİNGİ	O-RING	75X2.50mm		◆	◆	◆
62		0730 108 414		1	GRUP MİLİ ÖN BİLYA PULU	THRUST WASHER	2.40mm		◆	◆	◆
62		0730 104 302		1	GRUP MİLİ ÖN BİLYA PULU	THRUST WASHER	2.20mm		◆	◆	◆
62		0730 104 303		1	GRUP MİLİ ÖN BİLYA PULU	THRUST WASHER	2.00mm		◆	◆	◆
62		0730 106 656		1	GRUP MİLİ ÖN BİLYA PULU	THRUST WASHER	1.80mm		◆	◆	◆
63	K20.01147	0750 120 097	(0735 370 742)	1	GRUP MİLİ ÖN BİLYA	ROLLER BEARING	39.6X79.9X29.3mm		◆	◆	◆
64		0730 501 493		1	GRUP MİLİ ÖN BİLYA SEK.	RETAINING RING	2.50mm		◆	◆	◆
64		0730 501 489		1	GRUP MİLİ ÖN BİLYA SEK.	RETAINING RING	2.40mm		◆	◆	◆
65	K20.00768	1308 303 023		1	PRİZDİREK KARŞ.37 DİŞ	CONSTANT GEAR 37T				◆	◆
65	K20.00769	1308 303 020		1	PRİZDİREK KARŞ.31 DİŞ	CONSTANT GEAR 31T			◆		
66	K20.00770	1308 303 027		1	3.VİT.DİŞLİ KARŞ.32 DİŞ	GEAR 3rd 32T				◆	◆
66	K20.00771	1308 303 024		1	3.VİT.DİŞLİ KARŞ.37 DİŞ	GEAR 3rd 37T			◆		
67	K20.00772	1308 303 021		1	1./2.VİT.DİŞLİ KARŞ. 19/23 DİŞ	D.GEAR 1st/2nd 19/23T			◆	◆	◆
68	K20.00773	1308 303 022		1	GRUP MİLİ 14 DİŞ	COUNTER SHAFT 14T			◆	◆	◆
69	K20.01144	0735 370 438	(0750 117 198)	1	GRUP MİLİ ARKA BİLYA	ROLLER BEARING	39.6X76.2X23.8mm		◆	◆	◆
70		0630 502 022		1	KÜÇÜK GERİ VİT.KİLİT SEK.	LOCK PIN	1.75mm		◆	◆	◆
71	K20.00576	1304 305 030	(1304 305 002)	1	KÜÇÜK GERİ VİTES PİMİ	PIN			◆	◆	◆
72	K20.01333	0750 115 974	(0735 358 192)	2	KÜÇÜK GERİ VİT.MAS.BİLYA	NEEDLE CAGE	28.0X35.0X18.0mm		◆	◆	◆
			(0750 115 229)								
73	K20.00774	1308 305 001		1	K.GERİ VİTES DİŞLİSİ 20 DİŞ	REV.IDLER GEAR 20 T			◆	◆	◆
74		1308 201 110		1	ŞANZIMAN ORTA GÖVDE	HOUSING	New Type		◆	◆	◆
74		1308 201 068		1	ŞANZIMAN ORTA GÖVDE	HOUSING	Old Type		◆	◆	◆
75		1304 301 318		1	ŞANZ.DAMPER KAPAĞI	COVER			◆	◆	◆

NOTES :

Alphabetical Coding has been done according to Input Shaft
X1,X2,X3 are used conjunction with the encoded parts.

NOTLAR :

Alfabetik kodlamalar prizdireklere göre yapılmıştır.
X1,X2,X3 ile kodlanan parçalar birlikte kullanılır.

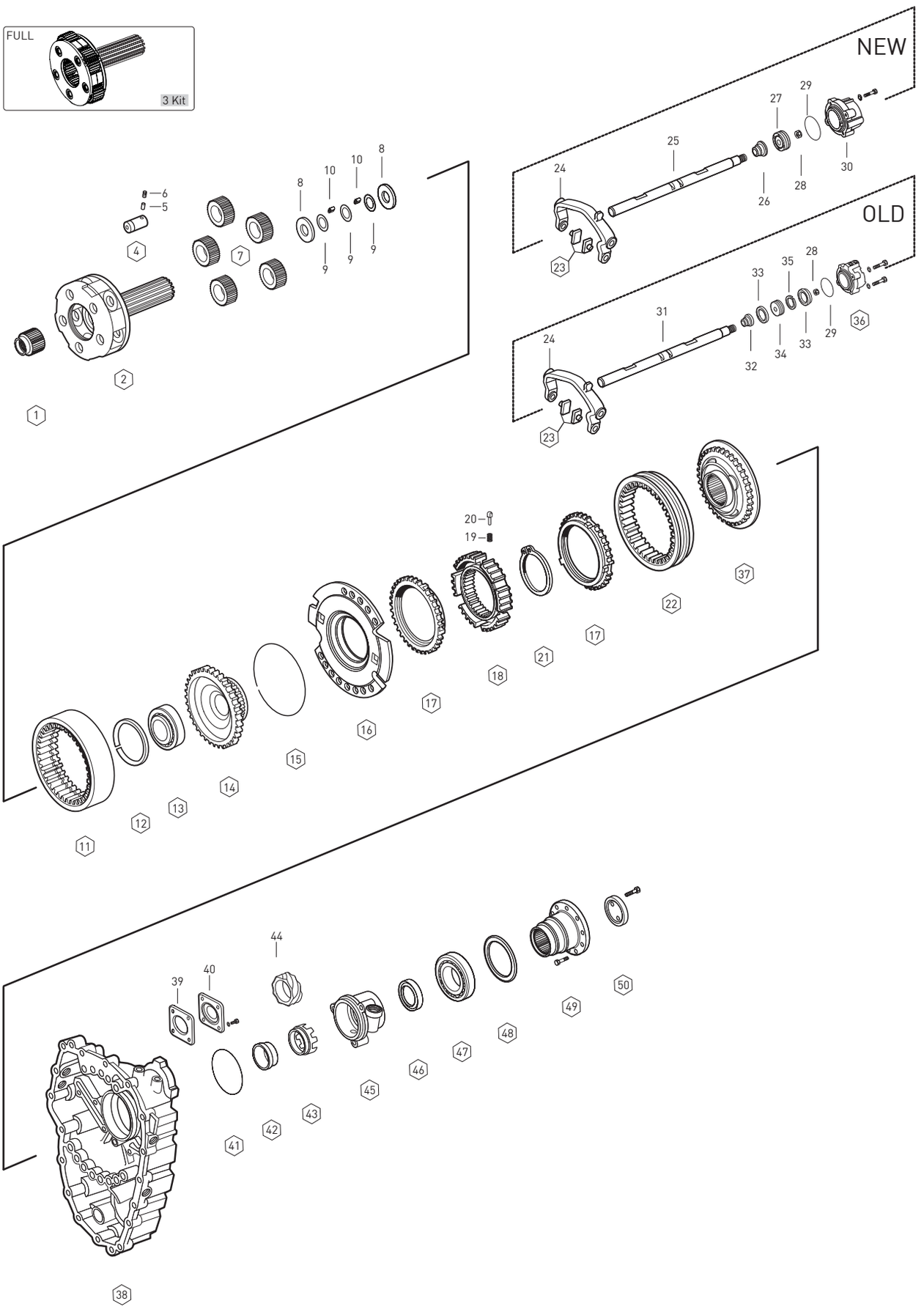

Original parts names, oem numbers, symbols and descriptions used in this catalogue are for reference purposes only.

Fig.	Kacmaz No.	Oem No	Oem Old No	Pcs.	Ürün Tanımı	Description	Sizes	Notes	(X1) :	(X2) :
1	K20.00767	1308 304 059		1	GÜNEŞ DİŞLİSİ 30 DİŞ	SUN GEAR 30 T			◆	◆
2	K20.00775	1308 232 011	(1308 232 009)	1	ŞANZIMAN HEYKELİ (BOŞ)	PLANETARY CARRIER	Empty		◆	◆
3	K20.00775	1308 232 011		1	ŞANZIMAN HEYKELİ (DOLU)	PLANETARY CARRIER	Full		◆	◆
4	K20.00777	1308 332 004		5	HEYKEL KOZA DİŞLİ PİMİ	PLANET SHAFT			◆	◆
5		0631 329 049		5	HEY.KOZA DİŞLİ PİM KİLİT PİMİ	LOCK PIN	5.0X22.0mm		◆	◆
6		0631 329 175		5	HEY.KOZA DİŞLİ PİM KİLİT PİMİ	LOCK PIN	3.0X22.0mm		◆	◆
7	K20.00776	1308 232 007		1	HEYKEL KOZA DİŞLİ TAKIMI	PLANETARY GEAR SET			◆	◆
8	K20.01508	0730 150 767	(0501 304 692)	10	HEYKEL KOZA DİŞLİ PULU	THRUST WASHER			◆	◆
9	K20.01509	0730 103 102		15	HEYKEL KOZA DİŞLİ PULU	THRUST WASHER			◆	◆
10	K20.01458	0735 470 155		200	HEYK.KOZA DİŞLİ TANE BİLYA	NEEDLE ROLLER	5X11.8mm		◆	◆
11	K20.00778	1308 332 026		1	ÇEMBER DİŞLİ 75 DİŞ	RING WHEEL 75 T			◆	◆
12		0730 513 744		1	PLANET ÇAN DİŞLİ BİLYA SEK.	RETAINING RING	2.00mm		◆	◆
12		0730 513 574		1	PLANET ÇAN DİŞLİ BİLYA SEK.	RETAINING RING	2.20mm		◆	◆
13	K20.01149	0750 116 958	(0635 338 090)	1	PLANET ÇAN DİŞLİ BİLYASI	ROLLER BEARING	65.0X85.0X10.0mm		◆	◆
14	K20.00779	1308 332 034		1	PLANET ÇAN DİŞLİ 75 DİŞ	CARRIER HUB 75 T	H=59.0mm		◆	◆
15	K20.01723	0730 505 149		1	ÇEMBER DİŞLİ SEGMANI	SPRING RING	2.00mm		◆	◆
16	K20.00780	1308 233 003		1	TEPSİ SENKROMENÇ	FLANGE			◆	◆
17	K20.00781	1268 304 594	(1268 304 445)	2	AĞIR SERİ SENK.FRENLEME	SYNCHRONIZING CONE			◆	◆
18	K20.00782	1308 332 036		1	AĞIR SERİ YILDIZ DİŞLİ	GUIDE SLEEVE			◆	◆
19	K20.00110	0732 040 409		3	AĞIR SERİ YILDIZ DİŞLİ YAYI	SPRING			◆	◆
20	K20.00783	1297 304 437		3	AĞIR SERİ YILDIZ DİŞLİ FİŞEĞİ	PRESSURE PIECE			◆	◆
21		0730 501 574		1	SERİ SENKROMENÇ SEGMANI	RETAINING RING	2.90mm		◆	◆
21		0730 501 505		1	SERİ SENKROMENÇ SEGMANI	RETAINING RING	3.20mm		◆	◆
22	K20.00784	1308 332 015		1	AĞIR SERİ SENK.HALKA	ENGAGING SLEEVE			◆	◆
23	K20.00204	1297 306 120		2	AĞIR SERİ HİLAL PABUCU	SLIDING PAD			◆	◆
24	K20.00785	1308 334 001		1	AĞIR SERİ HİLALİ	GEAR SHIFT FORK			◆	◆
25	K20.00786	1308 334 014		1	AĞIR SERİ HİLAL MİLİ	GEAR SHIFT RAIL	NEW		◆	
26	K20.01017	0750 112 047		1	AĞIR SERİ HİLAL MİL KEÇESİ	FLANGE PACKING	22.0X36.0X14.5mm		◆	
27		0734 309 377		1	AĞIR SERİ HİLAL MİL PİSTONU	PISTON	NEW		◆	
28	K20.01774	0737 300 037	(0737 006 095)	1	AĞIR SERİ HİLAL MİL SOMUNU	NUT			◆	◆
29		0634 313 216		1	AĞIR SERİ SİLİNDİR ORİNGİ	O-RING	82.0X2.5mm		◆	◆
30		1308 334 011		1	AĞIR SERİ SİLİNDİR GÖVDESİ	CYLINDER	NEW		◆	
31		1308 334 009		1	AĞIR SERİ HİLAL MİLİ	GEAR SHIFT RAIL				◆
32	K20.01017	0750 112 047		1	AĞIR SERİ HİLAL MİL KEÇESİ	FLANGE PACKING	22.0X36.0X14.5mm			◆
33		0750 112 048		2	AĞIR SERİ HİLAL MİL KEÇESİ	SEAL RING	OLD - 53.0X63.0X5.0mm			◆
34		1297 334 053		1	AĞIR SERİ HİLAL MİL PİSTONU	PISTON	OLD			◆
35		0750 145 002		1	AĞIR SERİ HİLAL MİL FİBERİ	GUIDE RING	OLD			◆
36		1304 334 038		1	AĞIR SERİ SİLİNDİR GÖVDESİ	CYLINDER	OLD			◆
37	K20.00787	1308 232 010	(1308 232 006)	1	SERİ SENKROMENÇ	ENGAGING RING			◆	◆
38		1308 301 234		1	ŞANZIMAN ARKA GÖVDE	HOUSING			◆	◆
39	K20.02108	1238 308 201	(1238 308 166)	1	PTO BAĞLANTI KAPAK CONTASI	GASKET			◆	◆

NOTES :

X1,X2 are used conjunction with the encoded parts.

NOTLAR :

X1,X2 ile kodlanan parçalar birlikte kullanılır.

Original parts names, oem numbers, symbols and descriptions used in this catalogue are for reference purposes only.

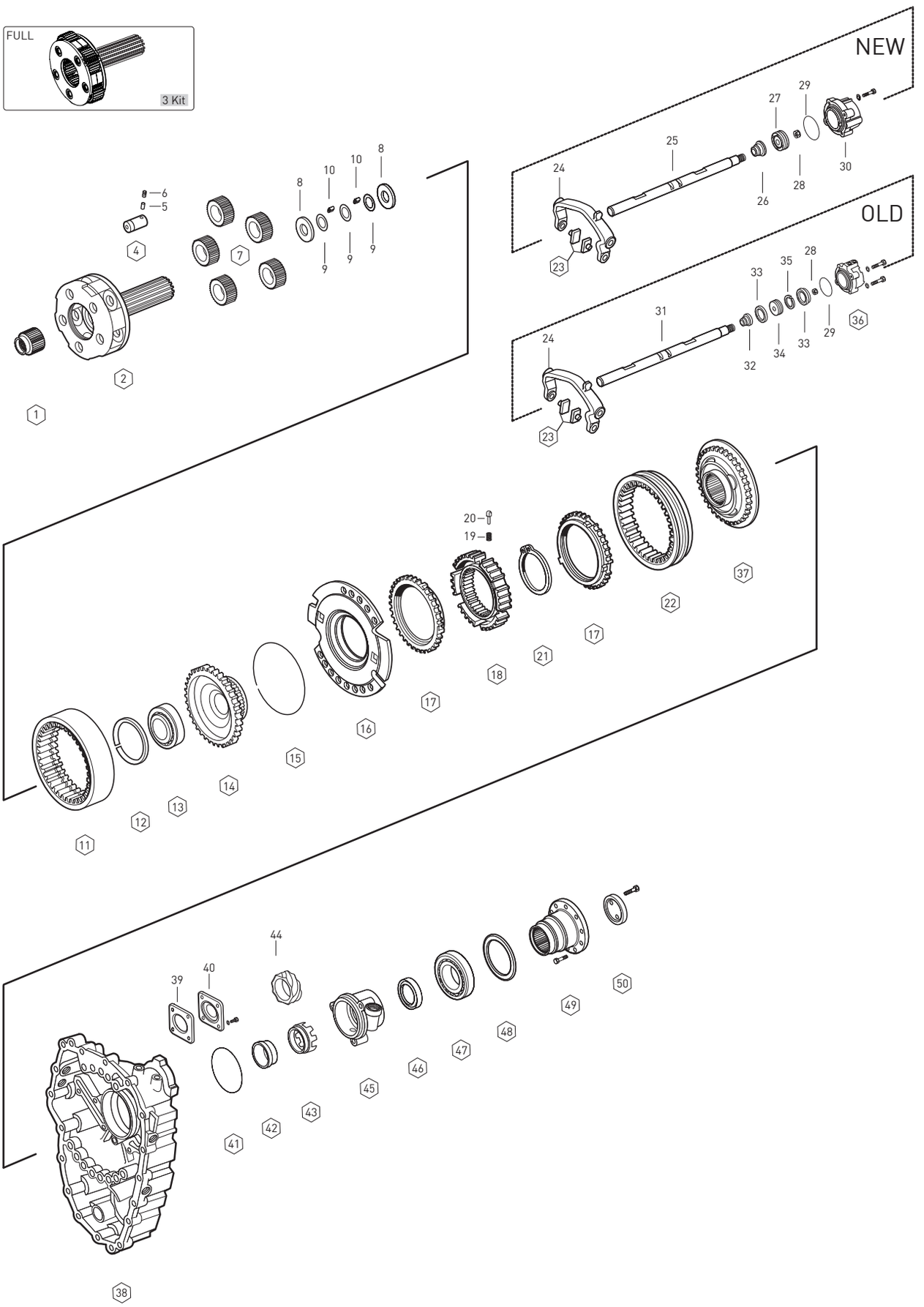

Original parts names, oem numbers, symbols and descriptions used in this catalogue are for reference purposes only.

Fig.	Kacmaz No.	Oem No	Oem Old No	Pcs.	Ürün Tanımı	Description	Sizes	Notes	(X1) :	(X2) :
40		1304 301 034		1	PTO BAĞLANTI KAPAĞI	COVER			◆	◆
41		0634 313 424		1	ŞANZ.ARKA KAPAK ORİNGİ	O-RING	134.0X3.0mm		◆	◆
42		0730 162 694		1	ŞANZ.ARKA KAPAK BURCU	BUSHING			◆	◆
43		1308 308 008		1	ŞANZIMAN KM.DEVİR SACI	PULSE STAR			◆	◆
44		1308 308 009		1	ŞANZ.KİLOMETRE DİŞLİSİ	SPEEDOMETER GEAR			◆	◆
45		1308 301 120	(1308 301 116)	1	ŞANZIMAN ARKA KAPAK	COVER			◆	◆
46	K20.01029	0734 319 687	(0750 111 334)	1	ŞANZ.ARKA KAPAK KEÇESİ	OIL SEAL	80.0X100.0X10.0mm		◆	◆
47	K20.01150	0735 330 597		1	ŞANZIMAN ARKA BİLYA	ROLLER BEARING	65.0X120.0X23.0mm		◆	◆
48	K20.01724	0730 002 657		1	ŞANZ.ARKA BİLYA RAYNELİ	SHIM	1.50mm		◆	◆
48	K20.01725	0730 002 661		1	ŞANZ.ARKA BİLYA RAYNELİ	SHIM	1.10mm		◆	◆
48	K20.01726	2001726		1	ŞANZ.ARKA BİLYA RAYNELİ	SHIM	0.30mm		◆	◆
48	K20.01727	2001727		1	ŞANZ.ARKA BİLYA RAYNELİ	SHIM	0.20mm		◆	◆
48	K20.01728	2001728		1	ŞANZ.ARKA BİLYA RAYNELİ	SHIM	0.10mm		◆	◆
49	K20.00789	1308 338 013		1	ŞANZIMAN FLANŞI	COMPANION FLANGE	4-H, Ø150mm		◆	◆
49	K20.00788	1308 338 025		1	ŞANZIMAN FLANŞI	COMPANION FLANGE	4-H, Ø180mm		◆	◆
49		1308 338 026		1	ŞANZIMAN FLANŞI	COMPANION FLANGE	8-H, Ø175mm		◆	◆
49		1308 338 014		1	ŞANZIMAN FLANŞI	COMPANION FLANGE			◆	◆
49		1308 338 016		1	ŞANZIMAN FLANŞI	COMPANION FLANGE			◆	◆
49		1308 338 017		1	ŞANZIMAN FLANŞI	COMPANION FLANGE	8-H, Ø175mm		◆	◆
49		1308 338 024		1	ŞANZIMAN FLANŞI	COMPANION FLANGE			◆	◆
50	K20.01729	1240 304 117		1	ŞANZIMAN FLANŞ PULU	WASHER			◆	◆

NOTES :

X1,X2 are used conjunction with the encoded parts.

NOTLAR :

X1,X2 ile kodlanan parçalar birlikte kullanılır.

SYNCHRONIZER KIT Const./3rd

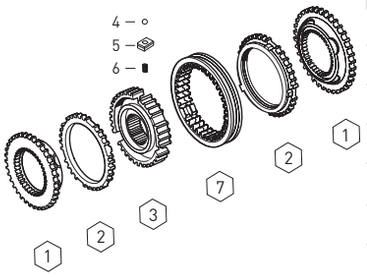

Fig.	Kacmaz No.	Oem No	Oem Old No	Pcs.	Ürün Tanımı	Description
	K20.01879	1308 298 008		Kit	PRİZ./3.VİT.SENKROMENÇ KİT	SYNCH.KIT Const./3rd.
1	K20.00734	1308 304 078		2	PRİZ./3.VİT.SENKROMENÇ	ENGAGING RING
2	K20.00735	1308 304 097	(1308 304 095)	2	PRİZ./3.VİT.SENK.FRENLEME	SYNCH.CONE
3	K20.00736	1308 304 111	(1307 304 607)	1	PRİZ./3.VİT.YILDIZ DİŞLİ	GUIDE SLEEVE
4	K20.01457	0635 460 010		3	YILDIZ DİŞLİ BİLYASI	BALL
5	K20.00738	1307 304 156		3	YILDIZ DİŞLİ FİŞEĞİ	PRESSURE PIECE
6	K20.00737	0732 041 571		3	YILDIZ DİŞLİ YAYI	SPRING
7	K20.00739	1308 304 090	(1307 304 076)	1	PRİZ./3.VİT.SENK.HALKA	ENGAGING SLEEVE

SYNCHRONIZER KIT Const./3rd

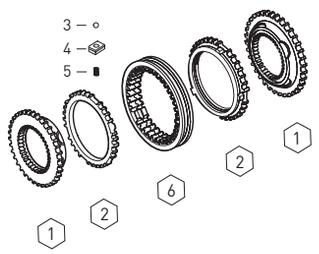

Fig.	Kacmaz No.	Oem No	Oem Old No	Pcs.	Ürün Tanımı	Description
	K20.01880	2001880		Kit	PRİZ./3.VİT.SENKROMENÇ KİT	SYNCH.KIT Const./3rd.
1	K20.00734	1308 304 078		2	PRİZ./3.VİT.SENKROMENÇ	ENGAGING RING
2	K20.00735	1308 304 097	(1308 304 095)	2	PRİZ./3.VİT.SENK.FRENLEME	SYNCH.CONE
3	K20.01457	0635 460 010		3	YILDIZ DİŞLİ BİLYASI	BALL
4	K20.00738	1307 304 156		3	YILDIZ DİŞLİ FİŞEĞİ	PRESSURE PIECE
5	K20.00737	0732 041 571		3	YILDIZ DİŞLİ YAYI	SPRING
6	K20.00739	1308 304 090	(1307 304 076)	1	PRİZ./3.VİT.SENK.HALKA	ENGAGING SLEEVE

SYNCHRONIZER KIT 1st./2nd

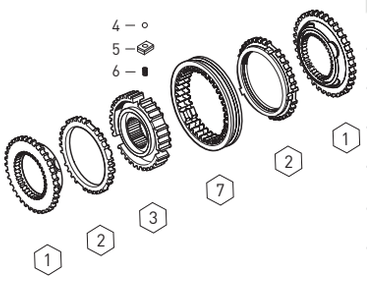

Fig.	Kacmaz No.	Oem No	Oem Old No	Pcs.	Ürün Tanımı	Description
	K20.01881	1308 298 010		Kit	1./2.VİT.SENKROMENÇ KİT	SYNCH.KIT 1st./2nd.
1	K20.00751	1308 304 077		2	1./2.VİT.SENKROMENÇ	ENGAGING RING
2	K20.00752	1308 304 096	(1308 304 094)	2	1./ 2.VİT.SENK.FRENLEME	SYNCH.CONE
3	K20.00753	1308 304 110	(1307 304 608)	1	1./ 2.VİT.YILDIZ DİŞLİ	GUIDE SLEEVE
4	K20.01457	0635 460 010		3	YILDIZ DİŞLİ BİLYASI	BALL
5	K20.00738	1307 304 156		3	YILDIZ DİŞLİ FİŞEĞİ	PRESSURE PIECE
6	K20.00737	0732 041 571		3	YILDIZ DİŞLİ YAYI	SPRING
7	K20.00754	1308 304 091	(1308 304 074)	1	1./ 2.VİT.SENK.HALKA	ENGAGING SLEEVE

SYNCHRONIZER KIT 1st./2nd

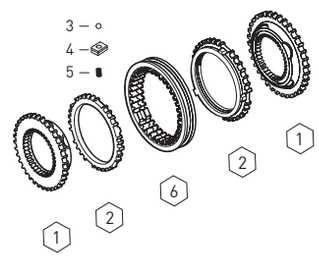

Fig.	Kacmaz No.	Oem No	Oem Old No	Pcs.	Ürün Tanımı	Description
	K20.01882	2001882		Kit	1./2.VİT.SENKROMENÇ KİT	SYNCH.KIT 1st./2nd.
1	K20.00751	1308 304 077		2	1./2.VİT.SENKROMENÇ	ENGAGING RING
2	K20.00752	1308 304 096	(1308 304 094)	2	1./ 2.VİT.SENK.FRENLEME	SYNCH.CONE
3	K20.01457	0635 460 010		3	YILDIZ DİŞLİ BİLYASI	BALL
4	K20.00738	1307 304 156		3	YILDIZ DİŞLİ FİŞEĞİ	PRESSURE PIECE
5	K20.00737	0732 041 571		3	YILDIZ DİŞLİ YAYI	SPRING
6	K20.00754	1308 304 091	(1308 304 074)	1	1./ 2.VİT.SENK.HALKA	ENGAGING SLEEVE

Original parts names, oem numbers, symbols and descriptions used in this catalogue are for reference purposes only.

Fig.	Kacmaz No.	Oem No	Oem Old No	Pcs.	Ürün Tanımı	Description
	K20.01969	2001969		Kit	PRİZ.-3./1.-2.VİT.SENK.KİT	SYNCHRONIZER KIT
1	K20.00734	1308 304 078		2	PRİZ./3.VİT.SENKROMENÇ	ENGAGING RING
2	K20.00735	1308 304 097	(1308 304 095)	2	PRİZ./3.VİT.SENK.FRENLEME	SYNCH.CONE
3	K20.01457	0635 460 010		6	YILDIZ DİŞLİ BİLYASI	BALL
4	K20.00738	1307 304 156		6	YILDIZ DİŞLİ FİŞEĞİ	PRESSURE PIECE
5	K20.00737	0732 041 571		6	YILDIZ DİŞLİ YAYI	SPRING
6	K20.00739	1308 304 090	(1307 304 076)	1	PRİZ./3.VİT.SENK.HALKA	ENGAGING SLEEVE
7	K20.00751	1308 304 077		2	1./2.VİT.SENKROMENÇ	ENGAGING RING
8	K20.00752	1308 304 096	(1308 304 094)	2	1./2.VİT.SENK.FRENLEME	SYNCH.CONE
9	K20.00754	1308 304 091	(1308 304 074)	1	1./2.VİT.SENK.HALKA	ENGAGING SLEEVE

SYNCHRONIZER KIT Const.-3rd / 1st-2nd

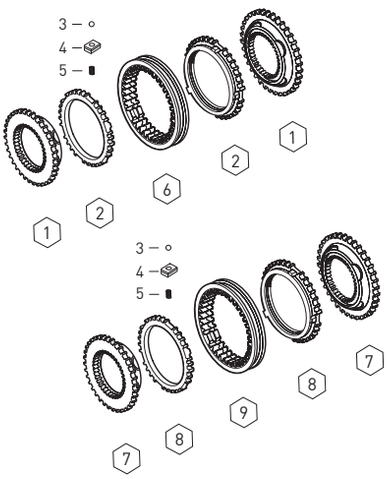

Fig.	Kacmaz No.	Oem No	Oem Old No	Pcs.	Ürün Tanımı	Description
	K20.01040	1308 298 001		Kit	ŞANZIMAN CONTA TAKIMI	GASKET KIT
1		1306 302 026		1	PRİZDİREK KEÇE KAPAK CONTASI	GASKET
2		0501 314 450		1	ŞANZIMAN ÖN GÖVDE CONTASI	GASKET
3		1308 301 026		1	ŞANZIMAN ORTA GÖVDE CONTASI	GASKET
4		1290 301 140		1	ŞANZIMAN DAMPER CONTASI	GASKET
5	K20.02108	1238 308 201		1	PTO BAĞLANTI KAPAK CONTASI	GASKET
6		0501 318 308		1	ŞANZIMAN KULE KAPAK CONTASI	GASKET
7		1308 307 032		1	ŞANZ.KULE ALT KAPAK CONTASI	GASKET

GEARBOX GASKET KIT

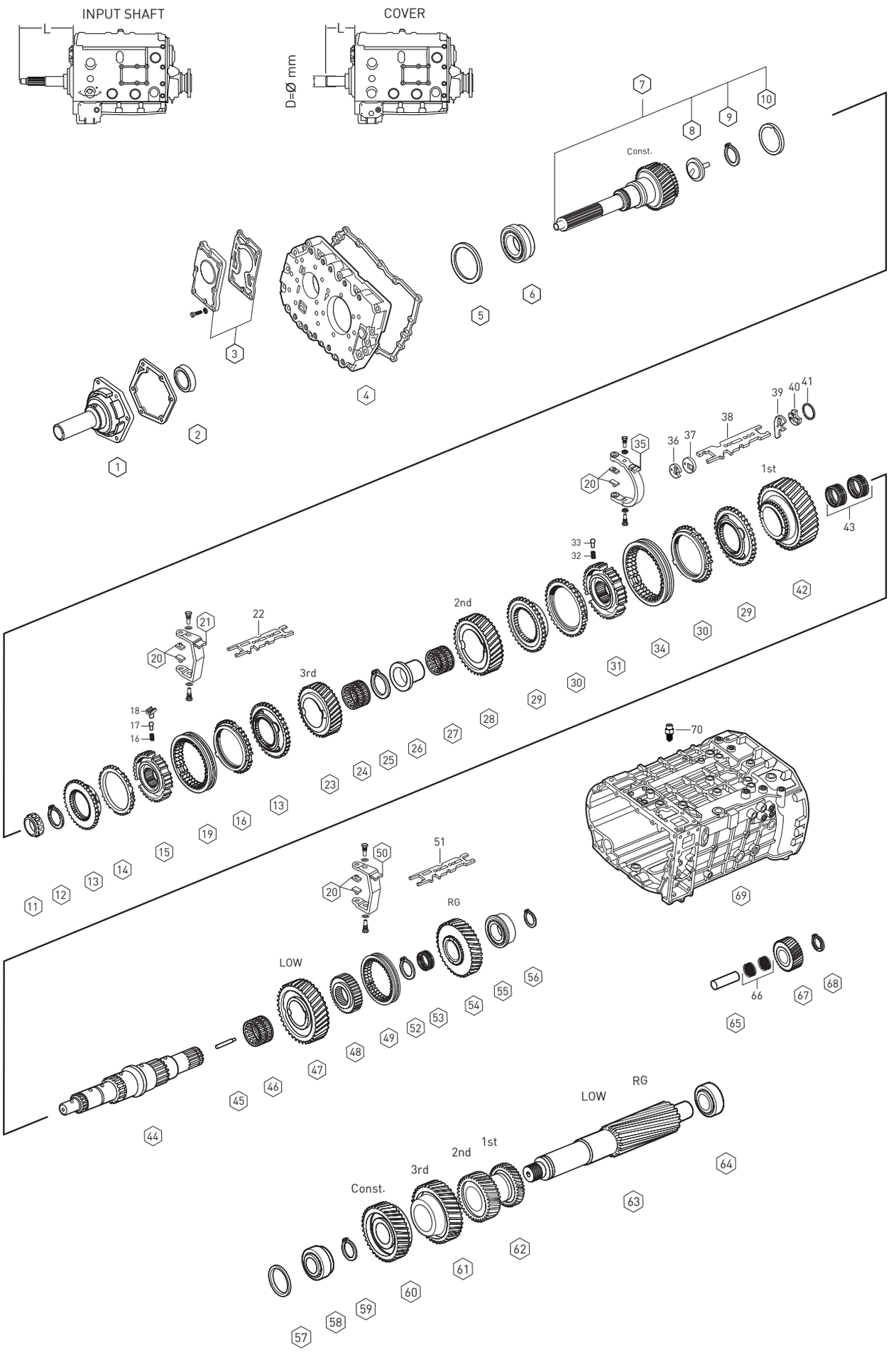

Original parts names, oem numbers, symbols and descriptions used in this catalogue are for reference purposes only.

Fig.	Kacmaz No.	Oem No	Oem Old No	Pcs.	Ürün Tanımı	Description	Sizes	Notes	(X1) : SG 1024-0.74	(X2) : SG 1025-0.79	(X3) : DG 1291-1.00	(X4) : DG 1292-1.00
1	K20.00571	1304 302 316	(1304 302 213)	1	PRİZDİREK KEÇE KAPAĞI	COVER	L=170 D=57	(B)	◆	◆	◆	◆
1		1304 302 318	(1304 302 215)	1	RİZDİREK KEÇE KAPAĞI	COVER	L=170 D=54	(R)	◆	◆	◆	◆
1	K20.00572	1304 302 319	(1304 302 216)	1	PRİZDİREK KEÇE KAPAĞI	COVER	L=190 D=57	(F) (I)	◆	◆	◆	◆
1	K20.00573	1304 302 444		1	PRİZDİREK KEÇE KAPAĞI	COVER	L=147 D=57	(M) (D)	◆	◆	◆	◆
1		1304 302 474		1	PRİZDİREK KEÇE KAPAĞI	COVER	L=215 D=57	(IS)	◆	◆	◆	◆
2	K20.01001	0750 111 149	(0734 310 161)	1	PRİZDİREK ÖN KEÇE	OIL SEAL	48X65X10mm		◆	◆	◆	◆
3	K20.00558	0501 004 549	(1304 203 008)	1	ŞANZIMAN YAĞ POMPASI	OIL PUMP			◆	◆	◆	◆
4	K20.00574	1304 301 331	(1304 301 413)	1	ŞANZIMAN ÖN GÖVDE	HOUSING			◆	◆	◆	◆
			(1304 301 198)									
5	K20.01595	0730 004 808		1	PRİZ.ÖN BİLYA RAYNELİ	SHIM	2.40mm		◆	◆	◆	◆
5	K20.01596	0730 004 805		1	PRİZ.ÖN BİLYA RAYNELİ	SHIM	2.25mm		◆	◆	◆	◆
5	K20.01597	0730 004 800		1	PRİZ.ÖN BİLYA RAYNELİ	SHIM	2.00mm		◆	◆	◆	◆
5	K20.01598	0730 005 646		1	PRİZ.ÖN BİLYA RAYNELİ	SHIM	1.95mm		◆	◆	◆	◆
5	K20.01599	2001599		1	PRİZ.ÖN BİLYA RAYNELİ	SHIM	0.30mm		◆	◆	◆	◆
5	K20.01600	2001600		1	PRİZ.ÖN BİLYA RAYNELİ	SHIM	0.20mm		◆	◆	◆	◆
5	K20.01601	2001601		1	PRİZ.ÖN BİLYA RAYNELİ	SHIM	0.10mm		◆	◆	◆	◆
6	K20.01101	0750 117 079	(0735 370 233)	1	PRİZDİREK ÖN BİLYA	ROLLER BEARING	66.6X117.4X30.1mm		◆	◆	◆	◆
7	K20.00275	1304 202 168	(1304 302 384)	1	PRİZDİREK (26 DİŞ)	INPUT SHAFT (26 T)	L=286 SAE10C 1 3/4	(B)			◆	◆
7	K20.00276	1304 202 175	(1304 302 386)	1	PRİZDİREK (26 DİŞ)	INPUT SHAFT (26 T)	L=320 SAE10C 1 3/4	(F)			◆	◆
7	K20.00277	1304 202 177	(1304 302 388)	1	PRİZDİREK (26 DİŞ)	INPUT SHAFT (26 T)	L=260 SAE10C 1 3/4	(M)			◆	◆
7	K20.00278	1304 202 178	(1304 202 105)	1	PRİZDİREK (26 DİŞ)	INPUT SHAFT (26 T)	L=310 SAE10C 1 3/4	(I)			◆	◆
7	K20.00575	1304 202 252	(1304 302 490)	1	PRİZDİREK (26 DİŞ)	INPUT SHAFT (26 T)	L=305 SAE10C 1 3/4	(F)			◆	
7	K20.00269	1304 202 170	(1304 202 102)	1	PRİZDİREK (27 DİŞ)	INPUT SHAFT (27 T)	L=260 SAE10C 1 3/4	(D)	◆			
7	K20.00270	1304 202 171	(1304 302 391)	1	PRİZDİREK (27 DİŞ)	INPUT SHAFT (27 T)	L=286 SAE10C 1 3/4	(R)(B)	◆	◆		
7	K20.00274	1304 202 245		1	PRİZDİREK (27 DİŞ)	INPUT SHAFT (27 T)	L=320 SAE10C 1 3/4	(IS)	◆			
8	K20.01501	1304 302 440		1	PRİZDİREK YAĞ PİPETİ	OIL PIPET			◆	◆	◆	◆
9	K20.01502	0630 502 063		1	PRİZDİREK SEGMANI	RETANING RING	472/58X2mm		◆	◆	◆	◆
10	K20.01010	0501 311 146		1	PRİZDİREK ARKA KEÇE	OIL SEAL			◆	◆	◆	◆
11	K20.01105	0735 371 748	(0750 117 507)	1	KAMALI MİL UÇ BİLYA	ROLLER BEARING	32X29.5mm		◆	◆	◆	◆
12	K20.02138	0630 501 146			PRİZ.VE 3.VİT.YILDIZ DİŞ. SEK.	RETAINING RING	50X2.20mm		◆	◆	◆	◆
12		0630 501 145			PRİZ.VE 3.VİT.YILDIZ DİŞ. SEK.	RETAINING RING	50X2.10mm		◆	◆	◆	◆
12		0630 501 149			PRİZ.VE 3.VİT.YILDIZ DİŞ. SEK.	RETAINING RING	50X1.90mm		◆	◆	◆	◆
13	K20.00295	1304 304 660	(1304 304 056)	2	PRİZ.VE 3.VİT.SENKROMENÇ	ENGAGING RING			◆	◆	◆	◆
14	K20.00260	1304 304 683	(1304 304 014)	2	PRİZ.VE 3.VİT.FRENLEME	SYNCHRONIZING CONE			◆	◆	◆	◆
15	K20.00296	1304 304 051		1	PRİZ.VE 3.VİT.YILDIZ DİŞLİ	GUIDE SLEEVE			◆	◆	◆	◆
16	K20.00110	0732 040 409		3	3.VİT.YILDIZ DİŞLİ YAYI	SPRING			◆	◆	◆	◆
17	K20.00467	1249 304 222		3	3.VİT.YILDIZ DİŞLİ PİMİ	PIN			◆	◆	◆	◆
18	K20.00468	1238 304 394		3	3.VİT.YILDIZ DİŞLİ FİŞEĞİ	PRESSURE PIECE			◆	◆	◆	◆
19	K20.00298	6002 305 515	(1304 304 013)	1	PRİZ.VE 3.VİT.SENK.HALKA	ENGAGING SLEEVE			◆	◆	◆	◆
20	K20.00169	1290 306 066		6	HİLAL PABUCU	SLIDING PAD			◆	◆	◆	◆
21		1304 306 096		1	3./4.VİTES HİLALİ	GEAR SHIT FORK 3rd/4th			◆	◆		

NOTES :

X1,X2,X3,X4 are used in conjunction with the encoded parts.
Alphabetical coding has been done according to İnput Shaft.

NOTLAR :

X1,X2,X3,X4 ile kodlanan parçalar birlikte kullanılır.
Alfabetik kodlamalar prizdireklere göre yapılmıştır.

Original parts names, oem numbers, symbols and descriptions used in this catalogue are for reference purposes only.

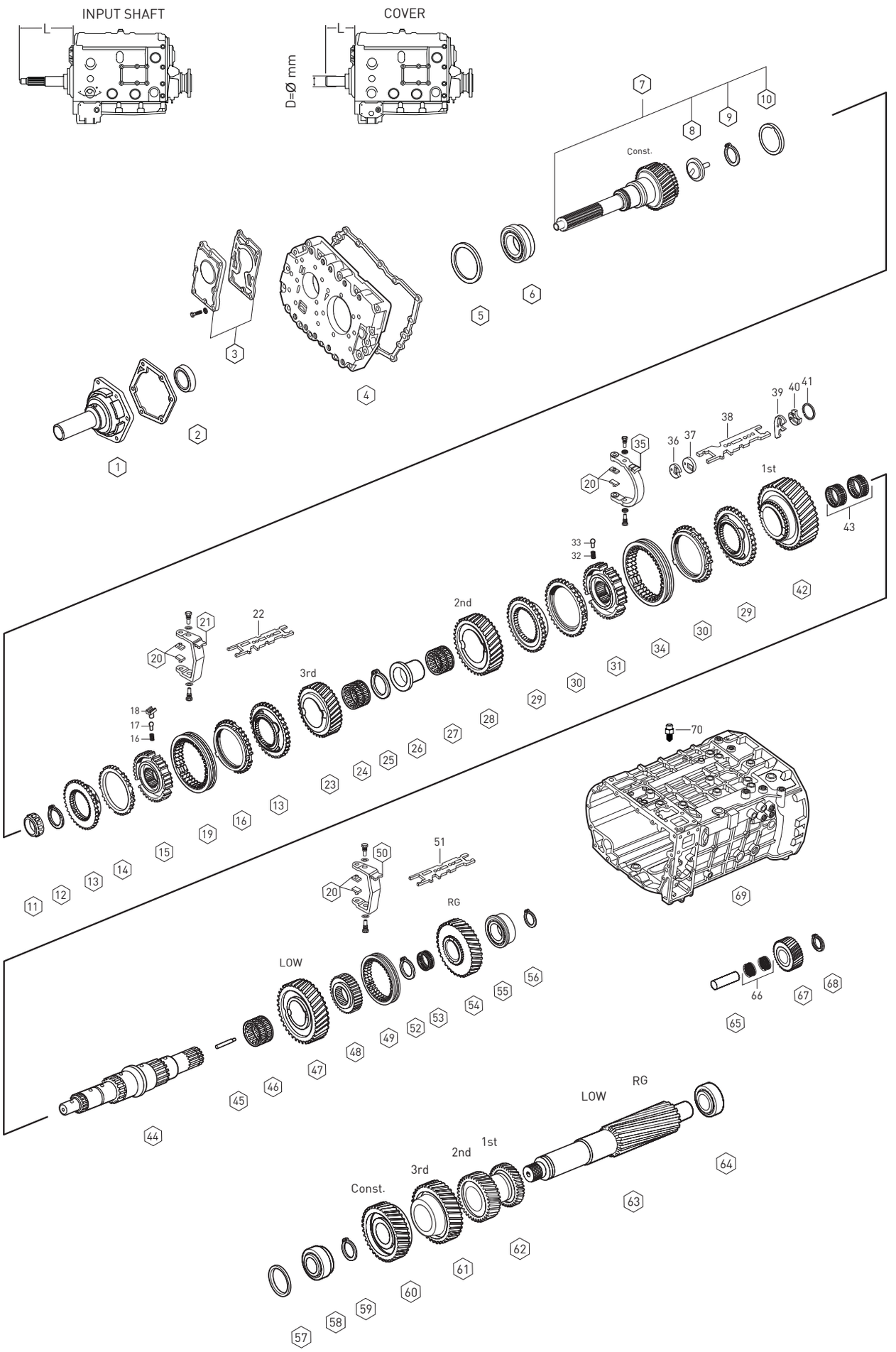

Original parts names, oem numbers, symbols and descriptions used in this catalogue are for reference purposes only.

Fig.	Kacmaz No.	Oem No	Oem Old No	Pcs.	Ürün Tanımı	Description	Sizes	Notes	X1): SG 10.24-0.74	X2): SG 10.25-0.79	X3): DG 12.91-1.00	X4): DG 12.92-1.00
21		1304 306 010		1	3./4.VİTES HİLALİ	GEAR SHIFT FORK 3rd/4th					◆	◆
22		1304 306 078		1	3./4.VİTES HİLAL ÇITASI	GEAR SHIFT RAIL 3rd/4th					◆	◆
22		1304 306 079		1	3./4.VİTES HİLAL ÇITASI	GEAR SHIFT RAIL 3rd/4th			◆	◆		
23	K20.00287	1304 304 472		1	3.VİTES DİŞLİSİ 23 DİŞ	GEAR 3rd 23 T			◆			
23	K20.00288	1304 304 365		1	3.VİTES DİŞLİSİ 24 DİŞ	GEAR 3rd 24 T				◆		
23	K20.00289	1304 304 571		1	3.VİTES DİŞLİSİ 27 DİŞ	GEAR 3rd 27 T					◆	
23	K20.00290	1304 304 500	(1304 304 331)	1	3.VİTES DİŞLİSİ 25 DİŞ	GEAR 3rd 25 T						◆
24	K20.01304	0735 321 011	(0735 320 822)	2	3.VİT.MASURA BİLYA	NEEDLE CAGE	60X68X23mm		◆	◆	◆	◆
25		0630 501 067		1	2.VİT.MAS.BİL.ÇANAK SEKM.	RETAINING RING	60x2.40mm		◆	◆	◆	◆
25	K20.02139	0630 501 069		1	2.VİT.MAS.BİL.ÇANAK SEKM.	RETAINING RING	60x2.20mm		◆	◆	◆	◆
25		0630 501 070		1	2.VİT.MAS.BİL.ÇANAK SEKM.	RETAINING RING	60x2.10mm		◆	◆	◆	◆
25		0630 501 041		1	2.VİT.MAS.BİL.ÇANAK SEKM.	RETAINING RING	60x2.00mm		◆	◆	◆	◆
26	K20.00320	1304 304 050	(1324 304 070)	1	2.VİT.MAS.BİL.ÇANAĞI	BEARING RACE			◆	◆	◆	◆
27	K20.01462	0750 115 970	(0750 115 227)	1	2.VİT.MASURA BİLYA	NEEDLE CAGE	75X83X40mm		◆	◆	◆	◆
			(0735 321 478)									
28	K20.00291	1304 304 367		1	2.VİTES DİŞLİSİ 31 DİŞ	GEAR 2nd 31 T			◆	◆		
28	K20.00292	1304 304 570		1	2.VİTES DİŞLİSİ 30 DİŞ	GEAR 2nd 30 T					◆	
28	K20.00293	1304 304 499	(1304 304 334)	1	2.VİTES DİŞLİSİ 29 DİŞ	GEAR 2nd 29 T						◆
29	K20.00261	1304 304 408		2	1./ 2.VİT.SENKROMENÇ	ENGAGING RING			◆	◆	◆	◆
30	K20.00262	1304 304 681	(1304 304 542)	2	1./ 2.VİT.SENK.FRENLEME	SYNCHRONIZING CONE			◆	◆	◆	◆
31	K20.00297	1304 304 591	(1324 304 052)	1	1./ 2.VİT.YILDIZ DİŞLİ	GUIDE SLEEVE			◆	◆	◆	◆
32	K20.00110	0732 040 409		3	1./ 2.VİT.YILDIZ DİŞ.YAYI	SPRING			◆	◆	◆	◆
33	K20.00111	1297 304 436		3	1./ 2.VİT.YILDIZ DİŞ.FİŞEĞİ	PRESSURE PIECE			◆	◆	◆	◆
34	K20.00255	1324 304 053	(1304 304 597)	1	1./ 2.VİT.SENK.HALKA	ENGAGING SLEEVE			◆	◆	◆	◆
			(1304 304 541)									
35		1304 306 009		1	1./2.VİTES HİLALİ	GEAR SHIT FORK 1st/2nd			◆	◆	◆	◆
36		1304 306 022		1	VİTES HİLAL ÇITA KİTLEMESİ	LEVER			◆	◆	◆	◆
37		1304 306 089		1	VİTES HİLAL ÇITA KİTLEMESİ	LEVER			◆	◆	◆	◆
38		1304 306 051		1	1./2.VİTES HİLAL ÇITASI	GEAR SHIFT RAIL 1st/2nd					◆	◆
38		1304 306 053		1	1./2.VİTES HİLAL ÇITASI	GEAR SHIFT RAIL 1st/2nd			◆	◆		
39		1304 306 140		1	VİTES HİLAL ÇITA KİTLEMESİ	LEVER			◆	◆	◆	◆
40		1304 306 090		1	VİTES HİLAL ÇITA KİTLEMESİ	LEVER			◆	◆	◆	◆
41		0730 300 430	(0730 009 856)	1	VİTES HİLAL ÇITA SEGMANI	RETAINING RING			◆	◆	◆	◆
42	K20.00303	1304 304 471		1	1.VİTES DİŞLİSİ 32 DİŞ	GEAR 1st 32 T			◆			
42	K20.00300	1304 304 369		1	1.VİTES DİŞLİSİ 33 DİŞ	GEAR 1st 33 T				◆		
42	K20.00305	1304 304 569	(1304 304 696)	1	1.VİTES DİŞLİSİ 33 DİŞ	GEAR 1st 33 T					◆	
42	K20.00306	1304 304 498	(1304 304 337)	1	1.VİTES DİŞLİSİ 33 DİŞ	GEAR 1st 33 T						◆
43	K20.01307	0735 320 816	(0750 115 971)	2	1.VİTES MASURA BİLYA	NEEDLE CAGE	75X83X23mm		◆	◆	◆	◆
44	K20.00307	1304 304 449		1	KAMALI MİL	MAIN SHAFT			◆	◆	◆	◆
45	K20.01506	1324 304 014	(1312 304 150)	1	KAMALI MİL YAĞ BORUSU	OIL PIPE			◆	◆	◆	◆
46	K20.01308	0750 115 972	(0735 320 500)	1	C VİT.MASURA BİLYA	NEEDLE CAGE	75X83X35mm		◆	◆	◆	◆

NOTES :
X1,X2,X3,X4 are used in conjunction with the encoded parts.
Alphabetical coding has been done according to İnput Shaft.

NOTLAR :
X1,X2,X3,X4 ile kodlanan parçalar birlikte kullanılır.
Alfabetik kodlamalar prizdireklere göre yapılmıştır.

Original parts names, oem numbers, symbols and descriptions used in this catalogue are for reference purposes only.

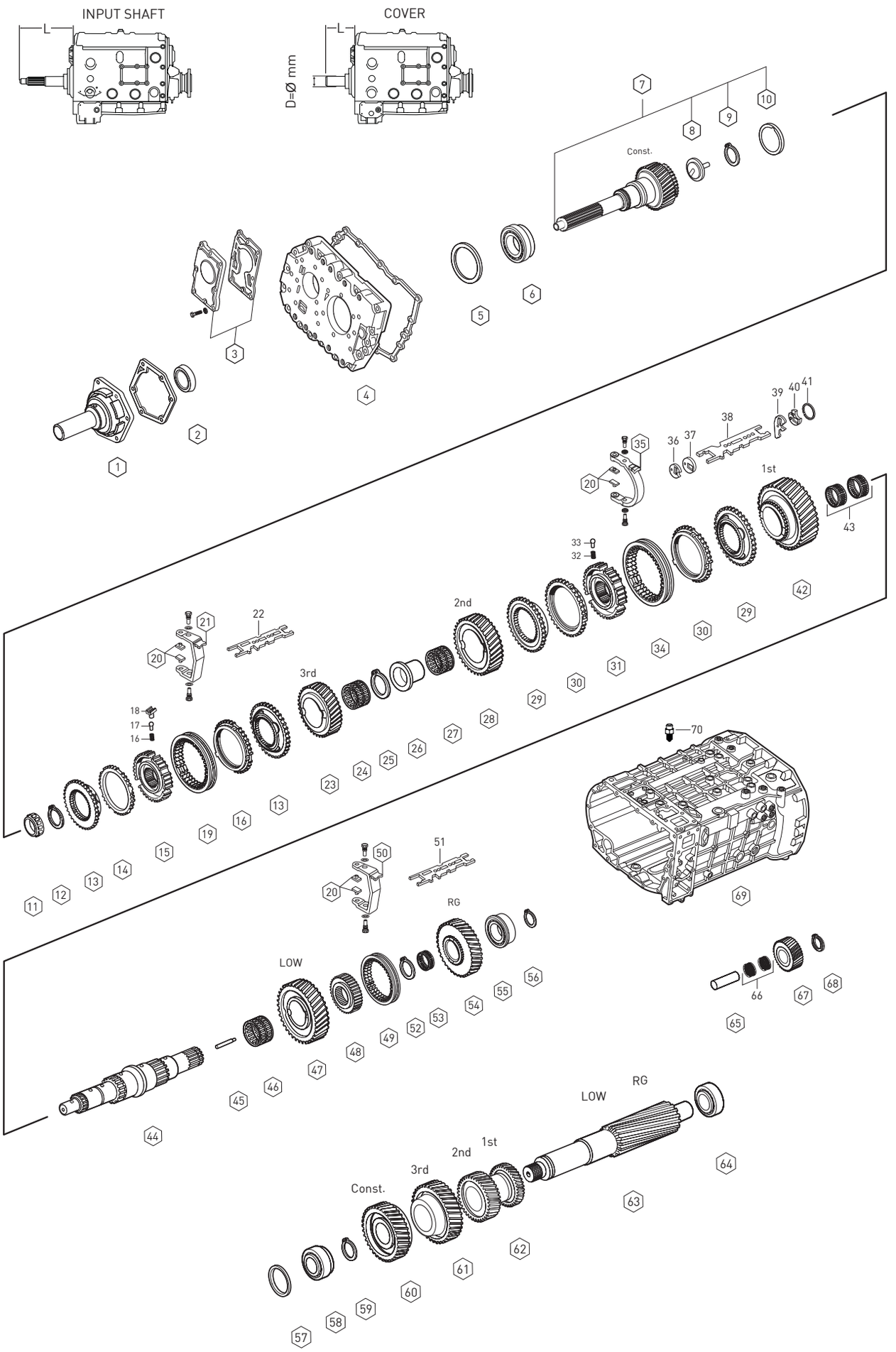

Original parts names, oem numbers, symbols and descriptions used in this catalogue are for reference purposes only.

Fig.	Kacmaz No.	Oem No	Oem Old No	Pcs.	Ürün Tanımı	Description	Sizes	Notes	(X1) : SG 10.24-0.74	(X2) : SG 10.25-0.79	(X3) : DG 12.91-1.00	(X4) : DG 12.92-1.00
47	K20.00308	1304 304 428		1	C VİTES DİŞLİSİ 38 DİŞ	GEAR CRAWLING GEAR 38 T			◆	◆		
47	K20.00309	1304 304 543		1	C VİTES DİŞLİSİ 37 DİŞ	GEAR CRAWLING GEAR 37 T					◆	
47	K20.00310	1304 304 426		1	C VİTES DİŞLİSİ 37 DİŞ	GEAR CRAWLING GEAR 37 T						◆
48	K20.00080	1324 304 037	(1304 304 443)	1	GERİ VİT.YILDIZ DİŞLİ	HUB			◆	◆	◆	◆
49	K20.00311	1304 304 444		1	GERİ VİT.HALKASI	ENGAGING SLEEVE			◆	◆	◆	◆
50		1304 306 077		1	C VE GERİ VİTES HİLALİ	GEAR SHIFT FORK LOW/RG			◆	◆		
50		1304 306 079		1	C VE GERİ VİTES HİLALİ	GEAR SHIFT FORK LOW/RG					◆	◆
51		1304 306 078		1	C VE GERİ VİT. HİLAL ÇITASI	GEAR SHIFT RAIL			◆	◆	◆	◆
52		0630 501 195		1	GERİ VİT.YILDIZ DİŞLİ SEKM.	RETAINING RING	2.80mm		◆	◆	◆	◆
52		0630 501 194		1	GERİ VİT.YILDIZ DİŞLİ SEKM.	RETAINING RING	2.70mm		◆	◆	◆	◆
52		0630 501 197		1	GERİ VİT.YILDIZ DİŞLİ SEKM.	RETAINING RING	2.60mm		◆	◆	◆	◆
52		0630 531 141		1	GERİ VİT.YILDIZ DİŞLİ SEKM.	RETAINING RING	2.50mm		◆	◆	◆	◆
53	K20.01309	0750 115 973	(0750 115 225)	1	GERİ VİT.MASURA BİLYA	NEEDLE CAGE	60X68X39mm		◆	◆	◆	◆
54	K20.00353	1304 304 437		1	GERİ VİTES DİŞLİSİ 35 DİŞ	REVERSE GEAR 35 T			◆	◆		
54	K20.00462	1304 304 553	(1324 304 021)	1	GERİ VİTES DİŞLİSİ 32 DİŞ	REVERSE GEAR 32 T					◆	
54	K20.00312	1304 304 435		1	GERİ VİTES DİŞLİSİ 32 DİŞ	REVERSE GEAR 32 T						◆
55	K20.01113	0735 371 605		1	KAMALI MİL ARKA BİLYA	ROLLER BEARING	50.8X104.7X30.1mm		◆	◆	◆	◆
56		0630 501 151		1	KAMALI MİL ARKA SEGMAN	RETAINING RING	50x3.20mm		◆	◆	◆	◆
56		0630 501 150		1	KAMALI MİL ARKA SEGMAN	RETAINING RING	50x3.10mm		◆	◆	◆	◆
56	K20.01960	0630 531 065		1	KAMALI MİL ARKA SEGMAN	RETAINING RING	50x3.00mm		◆	◆	◆	◆
56		0630 501 112		1	KAMALI MİL ARKA SEGMAN	RETAINING RING	50x2.90mm		◆	◆	◆	◆
56		0630 501 114		1	KAMALI MİL ARKA SEGMAN	RETAINING RING	50x2.80mm		◆	◆	◆	◆
56		0630 501 117		1	KAMALI MİL ARKA SEGMAN	RETAINING RING	50x2.70mm		◆	◆	◆	◆
56		0630 501 118		1	KAMALI MİL ARKA SEGMAN	RETAINING RING	50x2.60mm		◆	◆	◆	◆
56	K20.02200	0630 531 064		1	KAMALI MİL ARKA SEGMAN	RETAINING RING	50x2.50mm		◆	◆	◆	◆
56		0630 501 148		1	KAMALI MİL ARKA SEGMAN	RETAINING RING	50x2.40mm		◆	◆	◆	◆
56		0630 501 147		1	KAMALI MİL ARKA SEGMAN	RETAINING RING	50x2.30mm		◆	◆	◆	◆
56	K20.02138	0630 501 146		1	KAMALI MİL ARKA SEGMAN	RETAINING RING	50x2.20mm		◆	◆	◆	◆
56		0630 501 145		1	KAMALI MİL ARKA SEGMAN	RETAINING RING	50x2.10mm		◆	◆	◆	◆
57	K20.01602	0730 004 796		1	GRUP MİLİ BİLYA RAYNELİ	SHIM	2.90mm		◆	◆	◆	◆
57	K20.01603	0730 004 793		1	GRUP MİLİ BİLYA RAYNELİ	SHIM	2.75mm		◆	◆	◆	◆
57	K20.01604	0730 004 790		1	GRUP MİLİ BİLYA RAYNELİ	SHIM	2.60mm		◆	◆	◆	◆
57	K20.01605	0730 003 414		1	GRUP MİLİ BİLYA RAYNELİ	SHIM	2.05mm		◆	◆	◆	◆
57	K20.01606	0730 001 799		1	GRUP MİLİ BİLYA RAYNELİ	SHIM	2.00mm		◆	◆	◆	◆
57	K20.01607	0730 004 786		1	GRUP MİLİ BİLYA RAYNELİ	SHIM	1.95mm		◆	◆	◆	◆
57	K20.01608	0730 004 785		1	GRUP MİLİ BİLYA RAYNELİ	SHIM	1.90mm		◆	◆	◆	◆
57	K20.01609	2001609		1	GRUP MİLİ BİLYA RAYNELİ	SHIM	0.30mm		◆	◆	◆	◆
57	K20.01610	2001610		1	GRUP MİLİ BİLYA RAYNELİ	SHIM	0.20mm		◆	◆	◆	◆
57	K20.01611	2001611		1	GRUP MİLİ BİLYA RAYNELİ	SHIM	0.10mm		◆	◆	◆	◆
58	K20.01122	0735 371 749	(0750 118 511)	1	GRUP MİLİ ÖN BİLYA	ROLLER BEARING	40X80X32mm		◆	◆	◆	◆
			(0735 370 463)									
			(0635 376 023)									
59		0630 531 050		1	GRUP MİLİ ÖN BİLYA SEGM.	RETAINING RING	40X2.50mm		◆	◆	◆	◆

NOTES :
X1,X2,X3,X4 are used in conjunction with the encoded parts.
Alphabetical coding has been done according to İnput Shaft.

NOTLAR :
X1,X2,X3,X4 ile kodlanan parçalar birlikte kullanılır.
Alfabetik kodlamalar prizdireklere göre yapılmıştır.

Original parts names, oem numbers, symbols and descriptions used in this catalogue are for reference purposes only.

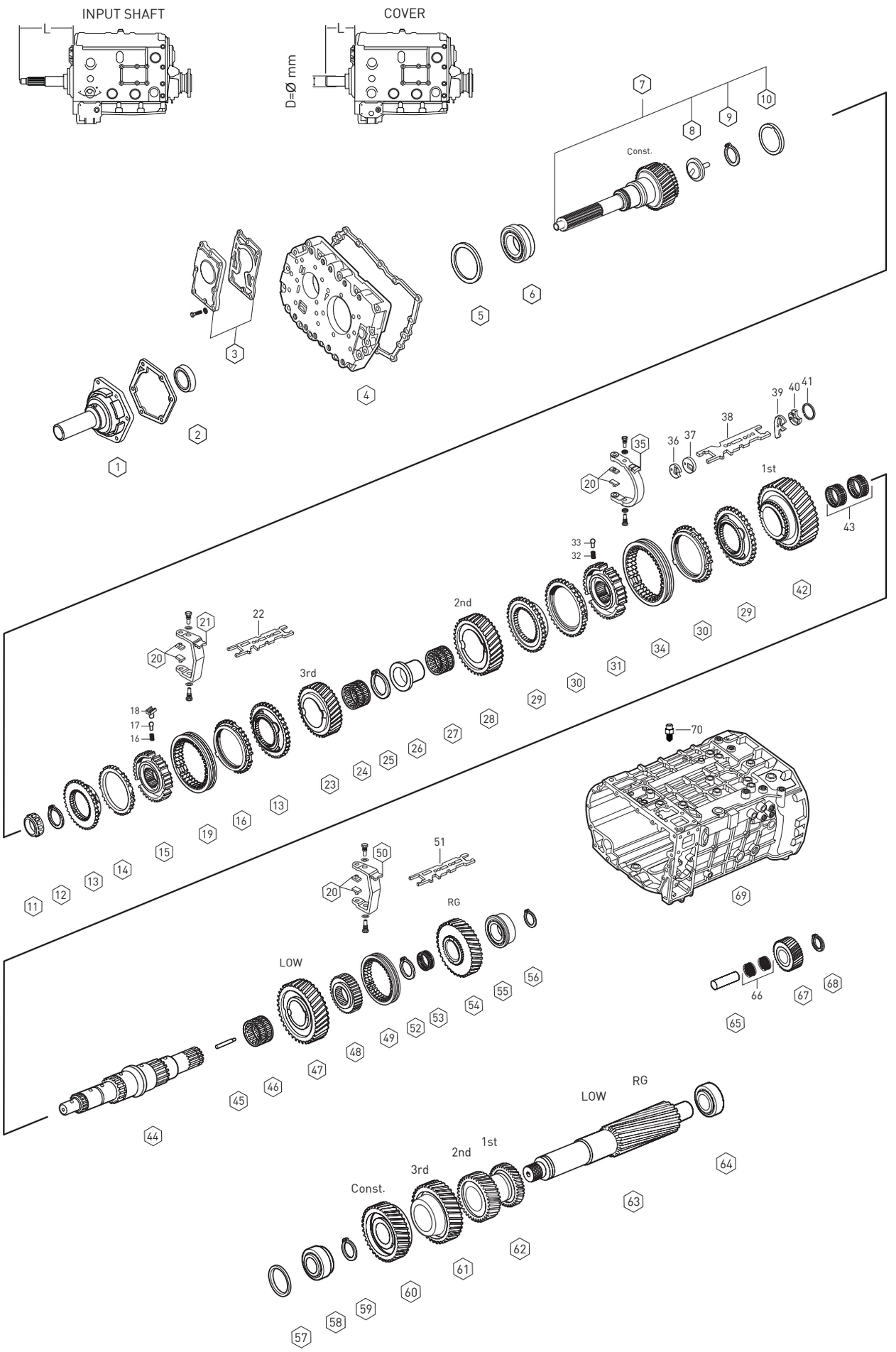

Original parts names, oem numbers, symbols and descriptions used in this catalogue are for reference purposes only.

Fig.	Kacmaz No.	Oem No	Oem Old No	Pcs.	Ürün Tanımı	Description	Sizes	(X1) : SG 10.24-0.74	(X2) : SG 10.25-0.79	(X3) : DG 12.91-1.00	(X4) : DG 12.92-1.00
59		0630 531 314		1	GRUP MİLİ ÖN BİLYA SEKM.	RETAINING RING	40X2.40mm	◆	◆	◆	◆
59		0630 531 315		1	GRUP MİLİ ÖN BİLYA SEKM.	RETAINING RING	40X2.30mm	◆	◆	◆	◆
59		0630 531 316		1	GRUP MİLİ ÖN BİLYA SEKM.	RETAINING RING	40X2.20mm	◆	◆	◆	◆
59		0630 501 135		1	GRUP MİLİ ÖN BİLYA SEKM.	RETAINING RING	40X2.10mm	◆	◆	◆	◆
59		0630 531 049		1	GRUP MİLİ ÖN BİLYA SEKM.	RETAINING RING	40X2.00mm	◆	◆	◆	◆
59		0630 501 301		1	GRUP MİLİ ÖN BİLYA SEKM.	RETAINING RING	40X1.90mm	◆	◆	◆	◆
59		0630 501 300		1	GRUP MİLİ ÖN BİLYA SEKM.	RETAINING RING	40X1.80mm	◆	◆	◆	◆
60	K20.00281	1304 303 285		1	PRİZ.DİŞLİ KARŞILIĞI 33 DİŞ	CONSTANT GEAR 33 T		◆	◆		
60	K20.00282	1304 303 272		1	PRİZ.DİŞLİ KARŞILIĞI 36 DİŞ	CONSTANT GEAR 36 T				◆	◆
61	K20.00283	1304 303 210		1	3.VİTES DİŞLİ KARŞ.38 DİŞ	GEAR 3rd 38 T		◆			
61	K20.00284	1304 303 171		1	3.VİTES DİŞLİ KARŞ.37 DİŞ	GEAR 3rd 37 T			◆		
61	K20.00285	1304 303 287		1	3.VİTES DİŞLİ KARŞ.28 DİŞ	GEAR 3rd 28 T				◆	
61	K20.00286	1304 303 244	(1304 303 151)	1	3.VİTES DİŞLİ KARŞ.27 DİŞ	GEAR 3rd 27 T					◆
62	K20.00313	1304 303 209		1	1./2.VİT.DİŞLİ KARŞ. 21/28 DİŞ	DOUBLE GEAR 1st/2nd 21/28 T		◆			
62	K20.00314	1304 303 172		1	1./2.VİT.DİŞLİ KARŞILIĞI	DOUBLE GEAR 1st/2nd			◆		
62	K20.00315	1304 303 286		1	1./2.VİT.DİŞLİ KARŞ. 18/23 DİŞ	DOUBLE GEAR 1st/2nd 18/23 T				◆	
62	K20.00316	1304 303 243	(1304 303 153)	1	1./2.VİT.DİŞLİ KARŞ. 19/23 DİŞ	DOUBLE GEAR 1st/2nd 19/23 T					◆
63	K20.00317	1304 303 269		1	GRUP MİLİ 16 DİŞ	COUNTER SHAFT 16 T		◆	◆		
63	K20.00318	1304 303 268		1	GRUP MİLİ 14 DİŞ	COUNTER SHAFT 14 T				◆	
63	K20.00319	1304 303 267		1	GRUP MİLİ 14 DİŞ	COUNTER SHAFT 14 T					◆
64	K20.01123	0750 117 083	(0750 120 291)	1	GRUP MİLİ ARKA BİLYA	ROLLER BEARING	50.8X95.2X27.7mm	◆	◆	◆	◆
			(0750 120 067)								
			(1246 203 007)								
65	K20.00576	1304 305 030	(1304 305 002)	1	KÜÇÜK GERİ VİTES PİMİ	PIN		◆	◆	◆	◆
66	K20.01333	0750 115 974	(0735 358 192)	2	KÜÇÜK GERİ VİT.MAS.BİLYA	NEEDLE CAGE	40.0X60.0X26.0mm	◆	◆	◆	◆
			(0750 115 229)								
67	K20.00577	1304 305 043	(1304 305 041)	1	KÜÇÜK GERİ VİTES DİŞLİSİ	REV.IDLER GEAR		◆	◆		
			(1304 305 036)								
			(1304 305 028)								
67	K20.00578	1304 305 045	(1304 305 040)	1	KÜÇÜK GERİ VİTES DİŞLİSİ	REV.IDLER GEAR				◆	
			(1304 305 033)								
67	K20.00579	1304 305 044	(1304 305 037)	1	KÜÇÜK GERİ VİTES DİŞLİSİ	REV.IDLER GEAR					◆
			(1304 305 031)								
			(1304 305 027)								
68		0630 502 022		1	KÜÇÜK GERİ VİTES PİM SEK.	RETAINING RING	40x1.75mm	◆	◆	◆	◆
69		1304 201 082	(1304 201 073)	1	ŞANZIMAN ORTA GÖVDE	HOUSING		◆	◆	◆	◆
69		1304 201 081	(1304 201 072)	1	ŞANZIMAN ORTA GÖVDE	HOUSING		◆	◆	◆	◆
70		1327 207 009	(1304 207 016)	1	İSTİNAT PİMİ	PIN	60 N	◆	◆	◆	◆
70	K20.00822	1324 207 034	(1313 207 004)	1	İSTİNAT PİMİ	PIN	105 N	◆	◆	◆	◆
70	K20.00814	1324 207 017	(1304 207 024)	1	İSTİNAT PİMİ	PIN	180 N	◆	◆	◆	◆

NOTES :

X1,X2,X3,X4 are used in conjunction with the encoded parts.
Alphabetical cooding has been done according to İnput Shaft.

NOTLAR :

X1,X2,X3,X4 ile kodlanan parçalar birlikte kullanılır.
Alfabetik kodlamalar prizdireklere göre yapılmıştır.

Original parts names, oem numbers, symbols and descriptions used in this catalogue are for reference purposes only.

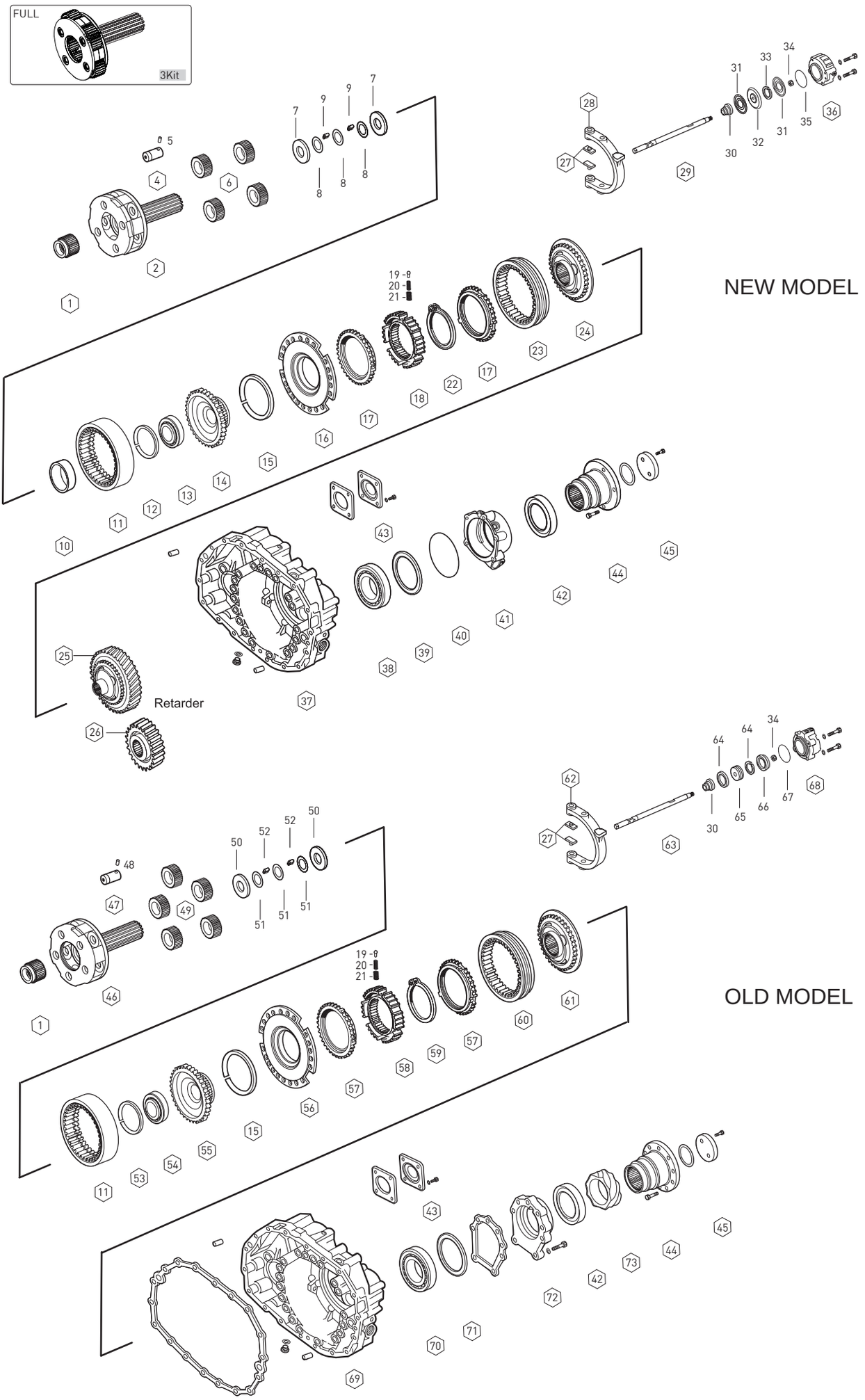

Original parts names, oem numbers, symbols and descriptions used in this catalogue are for reference purposes only.

Fig.	Kacmaz No.	Oem No	Oem Old No	Pcs.	Ürün Tanımı	Description	Sizes	Not	(X1) : 9 S 109	(X2) : 9 S 109	(X3) : 9 S 109
1	K20.00294	1304 304 448		1	GÜNEŞ DİŞLİ 34 DİŞ	SUN GEAR 34 T			◆	◆	◆
2	K20.00580	1304 232 095	(1304 232 048)	1	ŞANZIMAN HEYKELİ (BOŞ)	PLANETARY CARRIER	EMPTY		◆	◆	
3	K20.01060	1304 232 095		1	ŞANZIMAN HEYKELİ (DOLU)	PLANETARY CARRIER	FULL		◆	◆	
4	K20.00321	1304 332 111	(1304 332 019)	4	HEYKEL KOZA DİŞLİ PİMİ	PLANET SHAFT			◆	◆	
5		0631 329 037		4	KOZA DİŞLİ KİLİTLEME PİMİ	PIN	4.0X26.0mm		◆	◆	
6	K20.00279	1304 232 037		kit	HEYK.KOZA DİŞLİ TAKIMI	PLANETARY GEAR SET	4 pcs		◆	◆	
7	K20.01508	0730 150 767	(0501 304 692)	8	HEYKEL KOZA DİŞLİ PULU	THRUST WASHER			◆	◆	
8	K20.01509	0730 103 102		12	HEYKEL KOZA DİŞLİ PULU	THRUST WASHER			◆	◆	
9	K20.01451	0735 470 115		160	HEYK.KOZA DİŞ.TANE BİL.	NEEDLE ROLLER	5X15.3mm		◆	◆	
10	K20.01612	1304 333 012		1	ŞANZIMAN HEYKEL BURCU	BUSHING			◆	◆	
11	K20.00582	1304 332 178		1	ÇEMBER DİŞLİ 86 DİŞ	RING WHEEL 86 T			◆	◆	◆
12		0730 513 755		1	PLANET ÇAN DİŞLİ BİLYA SEK.	RETAINING RING	2.50mm		◆		
12		0730 513 756		1	PLANET ÇAN DİŞLİ BİLYA SEK.	RETAINING RING	2.40mm		◆		
12		0730 513 757		1	PLANET ÇAN DİŞLİ BİLYA SEK.	RETAINING RING	2.30mm		◆		
12		0730 513 758		1	PLANET ÇAN DİŞLİ BİLYA SEK.	RETAINING RING	2.20mm		◆		
12		0730 513 759		1	PLANET ÇAN DİŞLİ BİLYA SEK.	RETAINING RING	2.10mm		◆		
12		0730 513 760		1	PLANET ÇAN DİŞLİ BİLYA SEK.	RETAINING RING	2.00mm		◆		
13	K20.01133	0750 116 165	(0635 338 049)	1	PLANET ÇAN DİŞLİ BİLYASI	ROLLER BEARING	80.0X110.0X16.0mm		◆		
14	K20.00583	1304 332 215		1	PLANET ÇAN DİŞLİ	CARRIER HUB			◆		
15	K20.01613	0730 505 140		1	ÇEMBER DİŞLİ SEGMANI	SPRING RING	2.00mm		◆	◆	◆
16	K20.00230	1304 233 006	(1324 233 006)	1	TEPSİ SENKROMENÇ	FLANGE			◆		
			(1304 233 011)								
17	K20.00038	1296 333 045	(1296 333 022)	2	AĞIR SERİ SENK.FREN.	SYNCHRONIZING CONE			◆		
			(0769 174 091)								
18	K20.00185	1313 333 001		1	AĞIR SERİ YILDIZ DİŞLİ	GUIDE SLEEVE			◆		
19	K20.00471	1240 304 278		9	AĞR.SERİ YILDIZ DİŞ.FİŞ.	PRESSURE PIECE			◆	◆	◆
20	K20.00469	0732 040 385		9	AĞR.SERİ YILDIZ DİŞ.YAYI	SPRING			◆	◆	◆
21	K20.00470	0732 040 386		9	AĞR.SERİ YILDIZ DİŞ.YAYI	SPRING			◆	◆	◆
22		0630 501 061		1	AĞIR SERİ YILDIZ DİŞLİ SEKM.	RETAINING RING	125x4.00mm		◆		
22		0630 501 173		1	AĞIR SERİ YILDIZ DİŞLİ SEKM.	RETAINING RING	125x3.90mm		◆		
22		0630 501 174		1	AĞIR SERİ YILDIZ DİŞLİ SEKM.	RETAINING RING	125x3.80mm		◆		
22		0630 501 175		1	AĞIR SERİ YILDIZ DİŞLİ SEKM.	RETAINING RING	125x3.70mm		◆		
23	K20.00267	1304 333 011		1	AĞIR SERİ SENK.HALKA	ENGAGING SLEEVE			◆		
24	K20.00231	1304 233 013	(1297 233 059)	1	SERİ SENKROMENÇ	ENGAGING RING			◆		
25	K20.00323	1304 232 085	(1304 232 083)	1	SERİ SENKROMENÇ	ENGAGING RING	Retarder		◆		
26	K20.00584	6085 301 003		1	RETARDER DİŞLİ KARŞILIĞI	GEAR	Retarder		◆		
27	K20.00328	1272 334 003		2	AĞIR SERİ HİLAL PABUCU	SLIDING PAD			◆	◆	◆
28		1304 334 063		1	AĞIR SERİ HİLALİ	GEAR SHIFT FORK			◆		
29		1304 334 075		1	AĞIR SERİ HİLAL MİLİ	GEAR SHIFT RAIL			◆		
30	K20.01017	0750 112 047		1	AĞIR SERİ HİLAL MİL KEÇESİ	FLANGE PACKING	22.0X36.0X14.5mm		◆	◆	◆
31	K20.01018	0734 307 287		2	AĞIR SERİ HAVA KEÇESİ	SEALING RING	50.0X100.0X7.5mm		◆		

NOTES :
X1,X2,X3 are used in conjunction with the encoded parts.

NOTLAR :
X1,X2,X3 ile kodlanan parçalar birlikte kullanılır.

Original parts names, oem numbers, symbols and descriptions used in this catalogue are for reference purposes only.

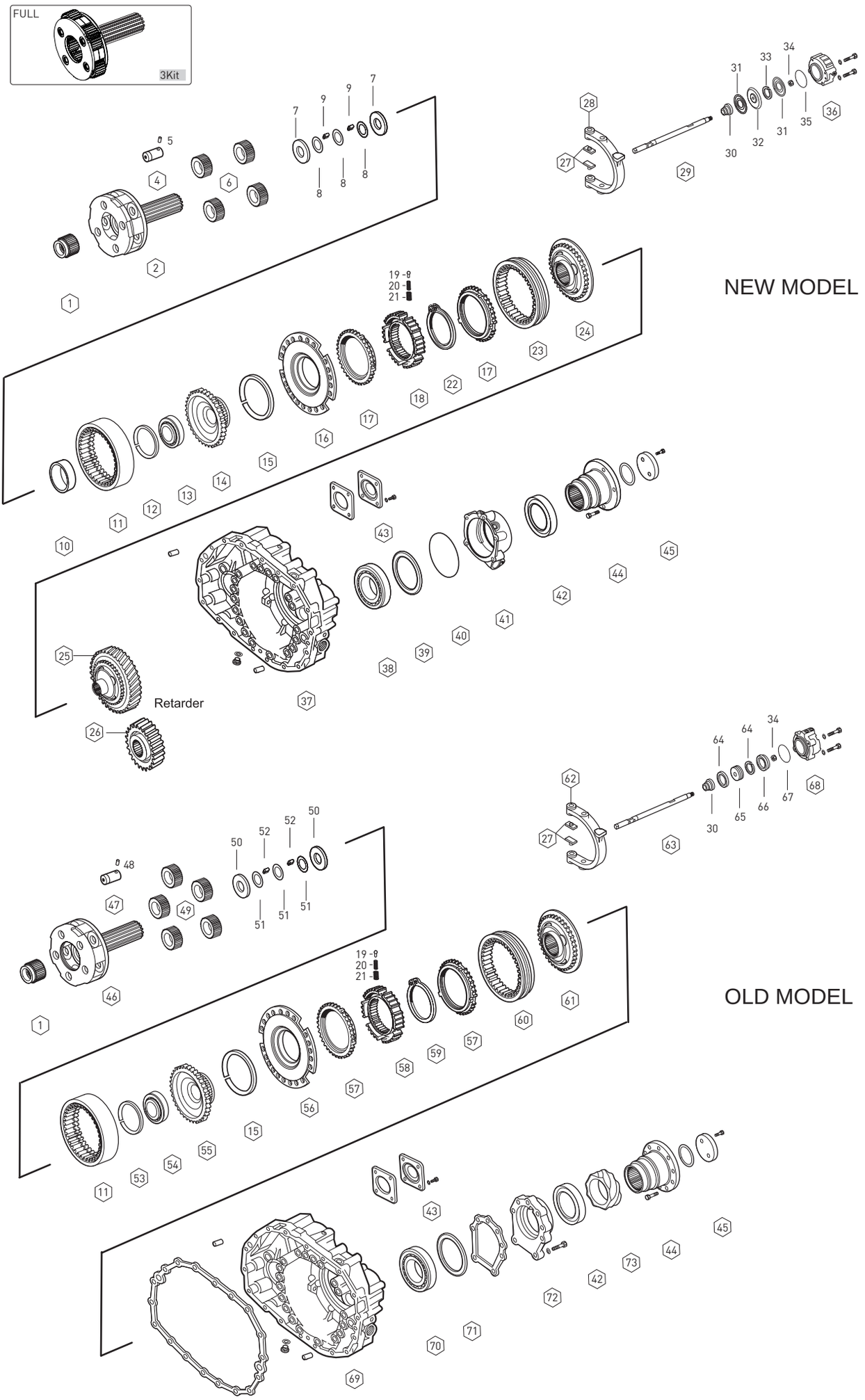

Original parts names, oem numbers, symbols and descriptions used in this catalogue are for reference purposes only.

Fig.	Kacmaz No.	Oem No	Oem Old No	Pcs.	Ürün Tanımı	Description	Sizes	Not	(X1) : 9 S 109	(X2) : 9 S 109	(X3) : 9 S 109
32	K20.02128	1315 334 041		1	AĞIR SERİ HİLAL MİL PİSTONU	PISTON			◆		
33	K20.01614	0750 112 096		1	AĞIR SERİ HİLAL MİL FİBERİ	GUIDE RING			◆		
34	K20.01774	0737 006 095		1	AĞIR SERİ HİLAL MİL SOMUNU	NUT	M16X1.5mm		◆	◆	◆
35	K20.02135	0634 313 338		1	AĞIR SERİ SİLİNDİR ORİNGİ	O-RING	108.0X3.0mm		◆		
36	K20.00888	1304 334 079	(1304 334 073)	1	AĞIR SERİ SİLİNDİR GÖVDESİ	CYLINDER			◆		
37		1304 301 382		1	ŞANZIMAN ARKA GÖVDE	HOUSING			◆		
38	K20.01156	0750 116 404	(0750 116 197)	1	ŞANZIMAN ARKA BİLYA	ROLLER BEARING	80.0X140.0X26.0mm		◆		
			(0635 332 066)								
39	K20.01615	2049 309 535		1	ŞANZ.ARKA BİLYA RAYNELİ	SHIM	1.90mm		◆		
39	K20.01616	0730 006 534		1	ŞANZ.ARKA BİLYA RAYNELİ	SHIM	1.50mm		◆		
39	K20.01617	2001617		1	ŞANZ.ARKA BİLYA RAYNELİ	SHIM	0.30mm		◆		
39	K20.01618	2001618		1	ŞANZ.ARKA BİLYA RAYNELİ	SHIM	0.20mm		◆		
39	K20.01619	2001619		1	ŞANZ.ARKA BİLYA RAYNELİ	SHIM	0.10mm		◆		
40		0634 303 110		1	ARKA BİLYA KAPAK ORİNGİ	O-RING	138X3mm		◆		
41		1304 301 351		1	ŞANZ.ARKA BİLYA KAPAĞI	BEARING COVER			◆		
42	K20.01012	0734 319 439		1	ŞANZ.ARKA KAPAK KEÇESİ	OIL SEAL	95X115X10mm		◆	◆	◆
42	K20.01022	0734 319 459	(0734 300 421)	1	ŞANZ.ARKA KAPAK KEÇESİ	OIL SEAL	105.0X125.0X12mm		◆		
43		1304 301 034		1	PTO BAĞLANTI KAPAĞI	COVER			◆	◆	◆
44	K20.00585	1304 338 109		1	ŞANZIMAN FLANŞI	COMP.FLANGE	4-H, Ø180mm		◆	◆	◆
44	K20.00340	1304 338 097		1	ŞANZIMAN FLANŞI	COMP.FLANGE	4-H, Ø180mm		◆	◆	◆
45	K20.01620	1304 338 072		1	ŞANZIMAN FLANŞ PULU	WASHER			◆	◆	◆
46	K20.00581	1304 232 091	(1304 232 090)	1	ŞANZIMAN HEYKELİ	PLANETARY CARRIER					◆
47	K20.00321	1304 332 111	(1316 332 019)	5	HEYKEL KOZA DİŞLİ PİMİ	PLANET SHAFT					◆
48		0631 329 037		5	KOZA DİŞLİ PİMİ	PIN					◆
49	K20.00280	1304 232 025		5	HEYK.KOZA DİŞLİ TAKIMI	PLANETARY GEAR SET					◆
50	K20.01508	0730 150 767	(0501 304 692)	10	HEYKEL KOZA DİŞLİ PULU	THRUST WASHER					◆
51	K20.01509	0730 103 102		15	HEYKEL KOZA DİŞLİ PULU	THRUST WASHER					◆
52	K20.01451	0735 470 115		200	HEYK.KOZA DİŞ.TANE BİL.	NEEDLE ROLLER	5X15.3mm				◆
53		0630 513 073		1	PLANET ÇAN DİŞLİ BİLYA SEG.	RETAINING RING	90X2.50mm			◆	◆
53		0630 513 187		1	PLANET ÇAN DİŞLİ BİLYA SEG.	RETAINING RING	90X2.40mm			◆	◆
53		0630 513 188		1	PLANET ÇAN DİŞLİ BİLYA SEG.	RETAINING RING	90X2.30mm			◆	◆
53		0630 513 189		1	PLANET ÇAN DİŞLİ BİLYA SEG.	RETAINING RING	90X2.20mm			◆	◆
53		0630 513 190		1	PLANET ÇAN DİŞLİ BİLYA SEG.	RETAINING RING	90X2.10mm			◆	◆
53		0630 513 191		1	PLANET ÇAN DİŞLİ BİLYA SEG.	RETAINING RING	90X2.00mm			◆	◆
53		0630 513 238		1	PLANET ÇAN DİŞLİ BİLYA SEG.	RETAINING RING	90X1.90mm			◆	◆
54	K20.01334	0735 340 080	(0635 338 028)	1	PLANET ÇAN DİŞLİ BİLYASI	ROLLER BEARING	70.0X90.0X10.0mm			◆	◆
55	K20.00586	1304 332 060		1	PLANET ÇAN DİŞLİ	CARRIER HUB				◆	◆
56	K20.00229	1304 233 005	(1304 233 004)	1	TEPSİ SENKROMENÇ	FLANGE				◆	◆
57	K20.00268	1304 333 005	(1304 333 021)	2	AĞIR SERİ SENK.FRENLEME	SYNCHRONIZING CONE				◆	◆
58	K20.00265	1304 332 066		1	AĞIR SERİ YILDIZ DİŞLİ	GUIDE SLEEVE				◆	◆
59		0630 501 141		1	AĞIR SERİ YILDIZ DİŞLİ SEGM.	RETAINING RING	100X3.20mm			◆	◆

NOTES :
X1,X2,X3 are used in conjunction with the encoded parts.

NOTLAR :
X1,X2,X3 ile kodlanan parçalar birlikte kullanılır.

Original parts names, oem numbers, symbols and descriptions used in this catalogue are for reference purposes only.

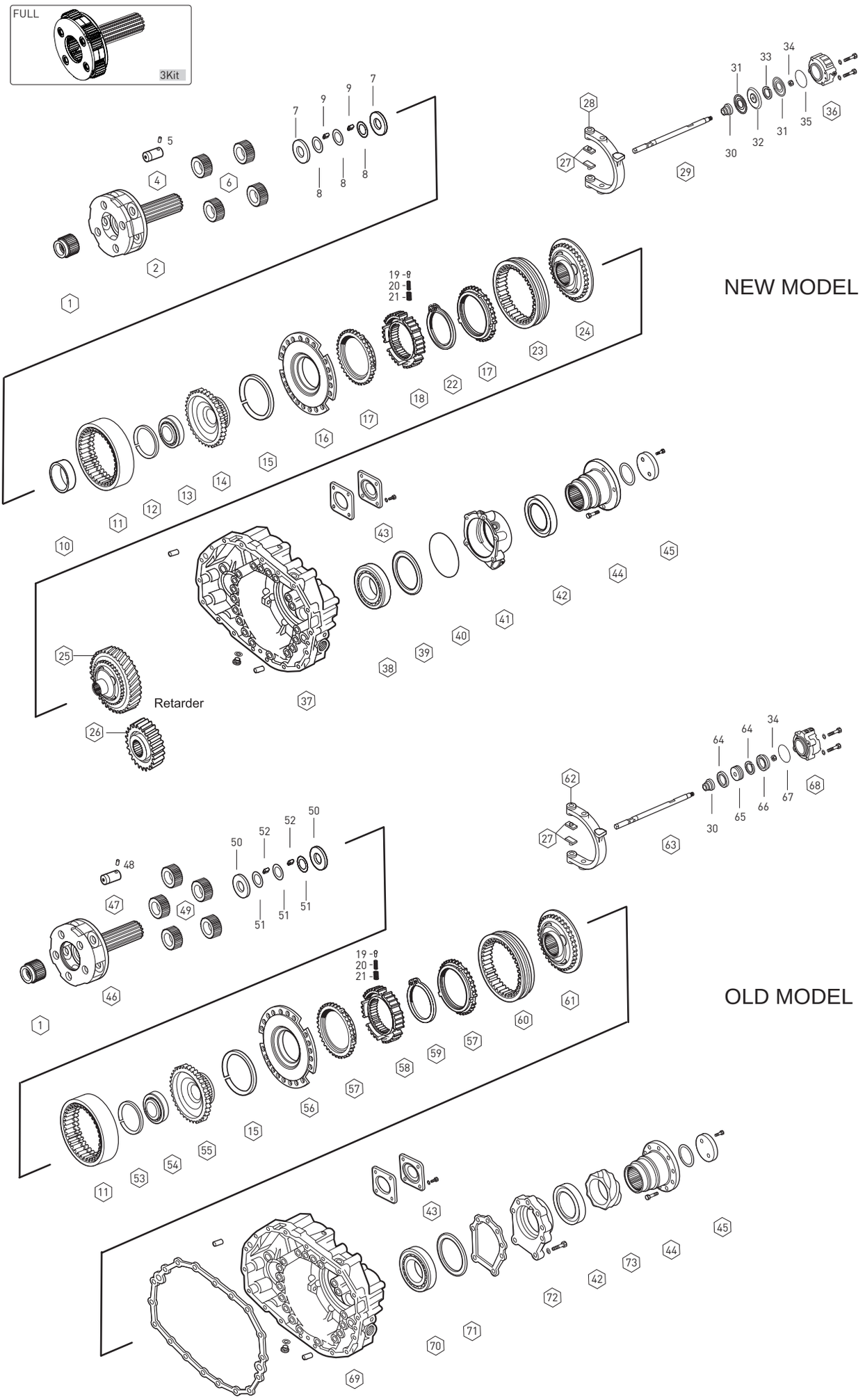

Original parts names, oem numbers, symbols and descriptions used in this catalogue are for reference purposes only.

Fig.	Kacmaz No.	Oem No	Oem Old No	Pcs.	Ürün Tanımı	Description	Sizes	Notes	(X1) : 9 S 109	(X2) : 9 S 109	(X3) : 9 S 109
59		0630 501 152		1	AĞIR SERİ YILDIZ DİŞLİ SEKM.	RETAINING RING	100X3.10mm			◆	◆
59		0630 501 056		1	AĞIR SERİ YILDIZ DİŞLİ SEKM.	RETAINING RING	100X3.00mm			◆	◆
59		0630 501 385		1	AĞIR SERİ YILDIZ DİŞLİ SEKM.	RETAINING RING	100X2.90mm			◆	◆
60	K20.00264	1304 332 089	(1304 332 065)	1	AĞIR SERİ SENK.HALKA	ENGAGING SLEEVE				◆	◆
61	K20.00266	1304 332 075		1	SERİ SENKROMENÇ	ENGAGING RING				◆	◆
62	K20.00888	1304 334 039	(1304 334 073)	1	AĞIR SERİ HİLALİ	GEAR SHIFT FORK				◆	◆
63		1304 334 009		1	AĞIR SERİ HİLAL MİLİ	GEAR SHIFT RAIL				◆	◆
64	K20.01023	0734 307 296	(0750 112 049)	2	AĞIR SERİ HAVA KEÇESİ	RING	74.0X84.0X5.0mm			◆	◆
65		1304 334 072	(1304 334 014)	1	A.SERİ HİLAL MİL PİSTONU	PISTON				◆	◆
66	K20.01621	0750 145 003		1	AĞIR SERİ HİLAL MİL FİBERİ	GUIDE RING				◆	◆
67		0634 313 232		1	AĞIR SERİ SİLİNDİR ORİNGİ	O-RING	95.0X2.0mm			◆	◆
68		1304 334 061	(1304 334 037)	1	AĞIR SERİ SİLİNDİR GÖVDESİ	CYLINDER				◆	◆
69		1304 301 360	(1304 301 315)	1	ŞANZIMAN ARKA GÖVDE	HOUSING				◆	◆
70	K20.01129	0750 116 048	(0735 330 137)	1	ŞANZIMAN ARKA BİLYA	ROLLER BEARING	78.0X130.0X25.0mm			◆	◆
71	K20.01622	0730 002 546		1	ŞANZ.ARKA BİLYA RAYNELİ	SHIM	1.60mm			◆	◆
71	K20.01623	2001623		1	ŞANZ.ARKA BİLYA RAYNELİ	SHIM	0.30mm			◆	◆
71	K20.01624	2001624		1	ŞANZ.ARKA BİLYA RAYNELİ	SHIM	0.20mm			◆	◆
71	K20.01625	2001625		1	ŞANZ.ARKA BİLYA RAYNELİ	SHIM	0.10mm			◆	◆
72		1304 301 089	(1304 301 016)	1	ŞANZ.ARKA BİLYA KAPAĞI	BEARING COVER				◆	◆
73		1304 338 020		1	ŞANZ.DEVİR DİŞLİSİ	GEAR				◆	◆

NOTES :
X1,X2,X3 are used in conjunction with the encoded parts.

NOTLAR :
X1,X2,X3 ile kodlanan parçalar birlikte kullanılır.

Original parts names, oem numbers, symbols and descriptions used in this catalogue are for reference purposes only.

SYNCHRONIZER KIT 3rd/Const.

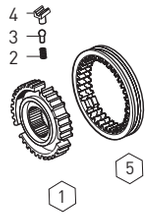

Fig.	Kacmaz No.	Oem No	Oem Old No	Pcs.	Ürün Tanımı	Description
	K20.00549	1304 204 052		Kit	PRİZ./3.VİT.HALKA YILDIZ KİTİ	SYNCH.KIT 3rd/Const.
1	K20.00296	1304 304 051		1	PRİZ.VE 3.VİT.YILDIZ DİŞLİ	GUIDE SLEEVE
2	K20.00110	0732 040 409		3	3.VİT.YILDIZ DİŞLİ YAYI	SPRING
3	K20.00467	1249 304 222		3	3.VİT.YILDIZ DİŞLİ PİMİ	PIN
4	K20.00468	1238 304 394		3	3.VİT.YILDIZ DİŞLİ FİŞEĞİ	PRESSURE PIECE
5	K20.00298	6002 305 515	(1304 304 013)	1	PRİZ.VE 3.VİT.SENK.HALKA	ENGAGING SLEEVE

SYNCHRONIZER KIT 3rd/Const.

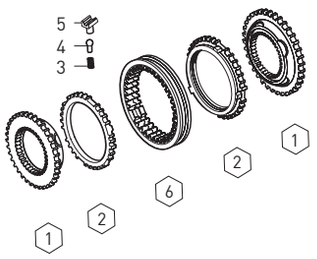

Fig.	Kacmaz No.	Oem No	Oem Old No	Pcs.	Ürün Tanımı	Description
	K20.00550	1304 298 982		Kit	PRİZ./3.VİT.SENKROMENÇ KİT	SYNCH.KIT 3rd/Const.
1	K20.00295	1304 304 660	(1304 304 056)	2	PRİZ.VE 3.VİT.SENKROMENÇ	ENGAGING RING
2	K20.00260	1304 304 683	(1304 304 014)	2	PRİZ.VE 3.VİT.FRENLEME	SYNCH.CONE
3	K20.00110	0732 040 409		3	3.VİT.YILDIZ DİŞLİ YAYI	SPRING
4	K20.00467	1249 304 222		3	3.VİT.YILDIZ DİŞLİ PİMİ	PIN
5	K20.00468	1238 304 394		3	3.VİT.YILDIZ DİŞLİ FİŞEĞİ	PRESSURE PIECE
6	K20.00298	6002 305 515	(1304 304 013)	1	PRİZ.VE 3.VİT.SENK.HALKA	ENGAGING SLEEVE

SYNCHRONIZER KIT 3rd/Const.

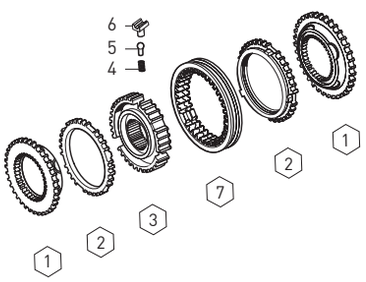

Fig.	Kacmaz No.	Oem No	Oem Old No	Pcs.	Ürün Tanımı	Description
	K20.00551	1304 298 971		Kit	PRİZ./3.VİT.SENKROMENÇ KİT	SYNCH.KIT 3rd/Const.
1	K20.00295	1304 304 660	(1304 304 056)	2	PRİZ.VE 3.VİT.SENKROMENÇ	ENGAGING RING
2	K20.00260	1304 304 683	(1304 304 014)	2	PRİZ.VE 3.VİT.FRENLEME	SYNCH.CONE
3	K20.00296	1304 304 051		1	PRİZ.VE 3.VİT.YILDIZ DİŞLİ	GUIDE SLEEVE
4	K20.00110	0732 040 409		3	3.VİT.YILDIZ DİŞLİ YAYI	SPRING
5	K20.00467	1249 304 222		3	3.VİT.YILDIZ DİŞLİ PİMİ	PIN
6	K20.00468	1238 304 394		3	3.VİT.YILDIZ DİŞLİ FİŞEĞİ	PRESSURE PIECE
7	K20.00298	6002 305 515	(1304 304 013)	1	PRİZ.VE 3.VİT.SENK.HALKA	ENGAGING SLEEVE

SYNCHRONIZER KIT 1st/2nd

Fig.	Kacmaz No.	Oem No	Oem Old No	Pcs.	Ürün Tanımı	Description
	K20.00552	1304 204 051		Kit	1./2.VİT.SENKROMENÇ KİT	SYNCH.KIT 1st/2nd.
1	K20.00262	1304 304 681	(1304 304 542)	2	1./ 2.VİT.SENK.FRENLEME	SYNCH.CONE
2	K20.00297	1304 304 591	(1324 304 052)	1	1./ 2.VİT.YILDIZ DİŞLİ	GUIDE SLEEVE
3	K20.00110	0732 040 409		3	1./ 2.VİT.YILDIZ DİŞ.YAYI	SPRING
4	K20.00111	1297 304 436		3	1./ 2.VİT.YILDIZ DİŞ.FİŞEĞİ	PRESSURE PIECE
5	K20.00255	1304 304 597	(1324 304 053)	1	1./ 2.VİT.SENK.HALKA	ENGAGING SLEEVE

SYNCHRONIZER KIT 1st/2nd

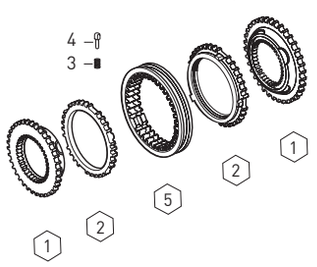

Fig.	Kacmaz No.	Oem No	Oem Old No	Pcs.	Ürün Tanımı	Description
	K20.00480	1304 298 980		Kit	1./ 2.VİT.SENKROMENÇ KİT	SYNCH.KIT 1st/2nd
1	K20.00261	1304 304 408		2	1./ 2.VİT.SENKROMENÇ	ENGAGING RING
2	K20.00262	1304 304 681	(1304 304 542)	2	1./ 2.VİT.SENK.FRENLEME	SYNCH.CONE
3	K20.00110	0732 040 409		3	1./ 2.VİT.YILDIZ DİŞ.YAYI	SPRING
4	K20.00111	1297 304 436		3	1./ 2.VİT.YILDIZ DİŞ.FİŞEĞİ	PRESSURE PIECE
5	K20.00255	1304 304 597	(1324 304 053)	1	1./ 2.VİT.SENK.HALKA	ENGAGING SLEEVE

Original parts names, oem numbers, symbols and descriptions used in this catalogue are for reference purposes only.

Fig.	Kacmaz No.	Oem No	Oem Old No	Pcs.	Ürün Tanımı	Description
	K20.00553	1304 298 970		Kit	1./2.VİT.SENKROMENÇ KİT	SYNCH.KIT 1st/2nd
1	K20.00261	1304 304 408		2	1./ 2.VİT.SENKROMENÇ	ENGAGING RING
2	K20.00262	1304 304 681	(1304 304 542)	2	1./ 2.VİT.SENK.FRENLEME	SYNCHRONIZING CONE
3	K20.00297	1304 304 591	(1324 304 052)	1	1./ 2.VİT.YILDIZ DİŞLİ	GUIDE SLEEVE
4	K20.00110	0732 040 409		3	1./ 2.VİT.YILDIZ DİŞ.YAYI	SPRING
5	K20.00111	1297 304 436		3	1./ 2.VİT.YILDIZ DİŞ.FİŞEĞİ	PRESSURE PIECE
6	K20.00255	1304 304 597	(1324 304 053)	1	1./ 2.VİT.SENK.HALKA	ENGAGING SLEEVE

SYNCHRONIZER KIT 1st/2nd

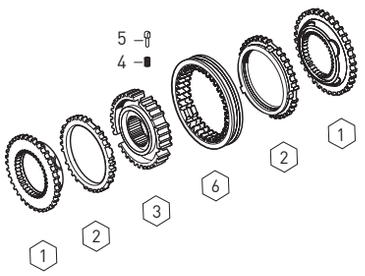

GEARBOX GASKET KIT

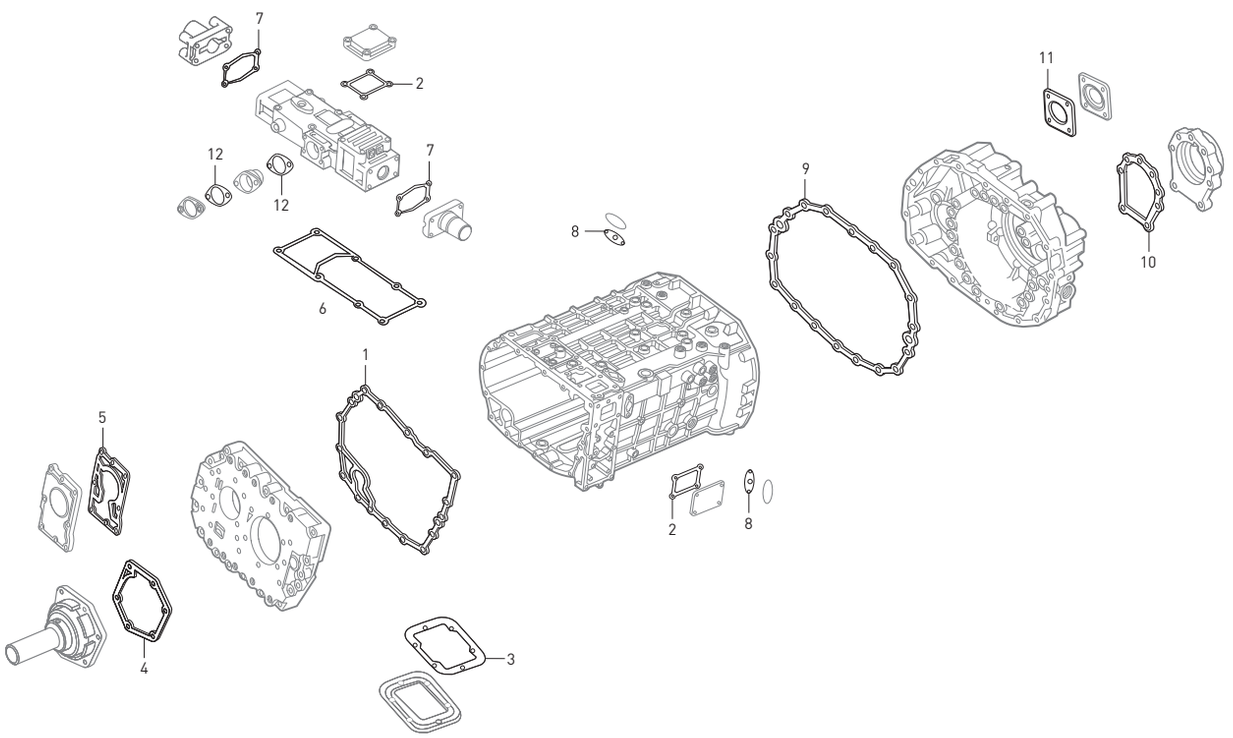

Fig.	Kacmaz No.	Oem No	Oem Old No	Pcs.	Ürün Tanımı	Description
	K20.01583	1304 298 914	(1304 298 902)	Kit	ŞANZIMAN CONTA TAKIMI	GASKET KIT
1		0501 313 379		1	ŞANZ.ÖN KAPAK CONTASI	GASKET
2		1304 307 437	(1304 307 176)	2	ŞANZ.KULE BAĞ.KAPAK CONTASI	GASKET
3		1290 301 140	(1290 301 073)	1	ŞANZ.DAMPER CONTASI	GASKET
4		0501 316 990	(0501 313 678)	1	PRİZ.KEÇE KAPAK CONTASI	GASKET
5		1304 303 297		1	YAĞ POMPA CONTASI	GASKET
6		1304 307 338		1	ŞANZ.KULE ALT CONTASI	GASKET
7		0501 318 308	(1304 307 177)	2	ŞANZ.KULE KAPAK CONTASI	GASKET
8		1268 307 170	(1268 307 091)	2	ŞANZ.MÜŞÜR KAPAK CONTASI	GASKET
9		1304 301 063	(1304 301 030)	1	ŞANZ.ARKA GÖVDE CONTASI	GASKET
10		1304 301 109	(1304 301 021)	1	ŞANZ.ARKA KEÇE KAPAK CONTASI	GASKET
11	K20.02108	1238 308 201	(1238 308 166)	1	PTO BAĞLANTI KAPAK CONTASI	GASKET
12		1304 307 277	(1304 307 196)	2	ŞANZ.İSTİNAT KAPAK CONTASI	GASKET

Original parts names, oem numbers, symbols and descriptions used in this catalogue are for reference purposes only.

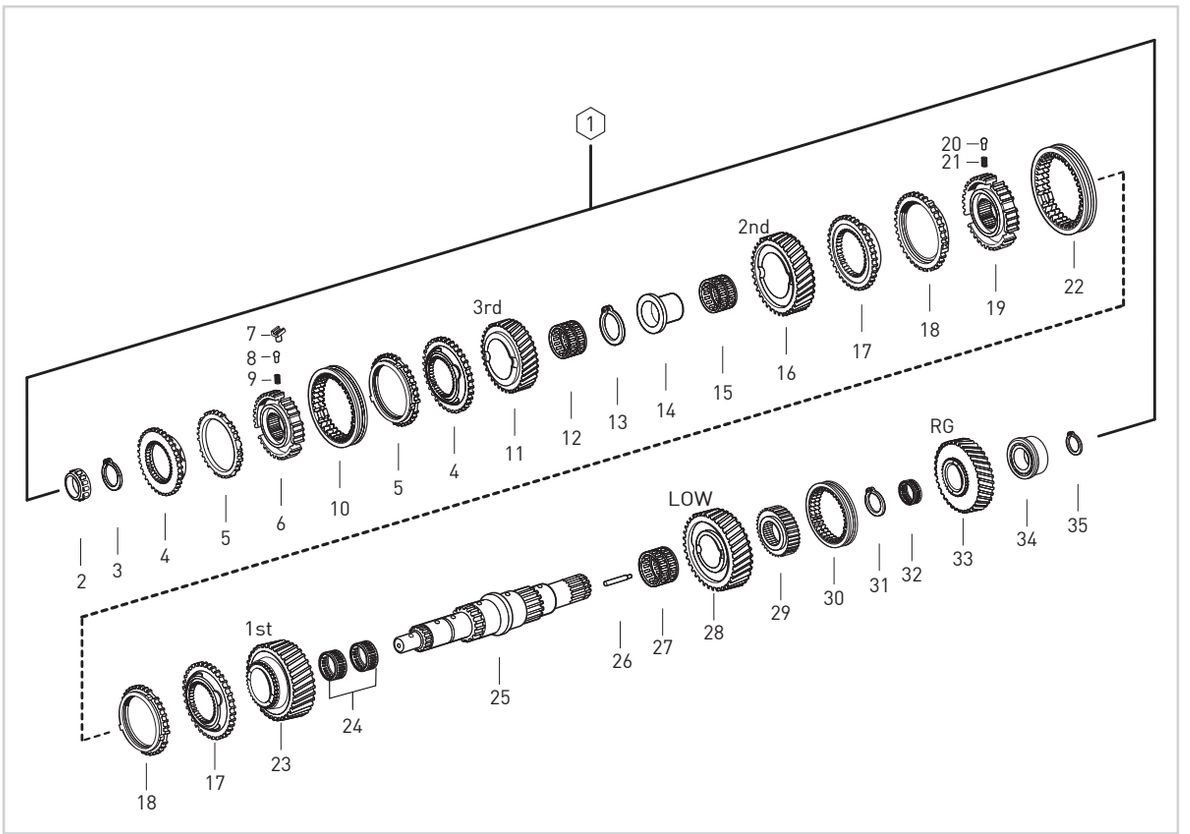

Fig	Kacmaz No.	Oem No	Oem Old No	Pcs.	Ürün Tanımı	Description	Sizes
1	K20.00987	2000987		kit	KAMALI MİL KOMPLE	MAIN SHAFT COMPLETE	
2	K20.01105	0735 371 748	(0750 117 507)	1	KAMALI MİL UÇ BİLYA	ROLLER BEARING	32x29.50mm
3	K20.02138	0630 501 146		1	PRİZ.VE 3.VİT.YILDIZ DİŞ.SEKMANI	RETAINING RING	2.20mm
4	K20.00295	1304 304 660	(1304 304 056)	2	PRİZ.VE 3.VİT.KİLİT SENKROMENÇ	ENGAGING RING	
5	K20.00260	1304 304 683	(1304 304 014)	2	PRİZ. VE 3.VİTES SENK.FRENLEME	SYNCHRONIZING CONE	
6	K20.00296	1304 304 051		1	PRİZ.VE 3.VİT.YILDIZ DİŞLİ	GUIDE SLEEVE	
7	K20.00468	1238 304 394		3	3.VİTES YILDIZ DİŞLİ FİŞEĞİ	PRESSURE PIECE	
8	K20.00467	1249 304 222		3	3.VİTES YILDIZ DİŞLİ PİMİ	PIN	
9	K20.00110	0732 040 409		3	3.VİTES YILDIZ DİŞLİ FİŞEK YAYI	SPRING	
10	K20.00298	6002 305 515	(1304 304 013)	1	PRİZ. VE 3.VİTES SENK.HALKA	ENGAGING SLEEVE	
11	K20.00289	1304 304 571		1	3.VİTES DİŞLİSİ 27 DİŞ	GEAR 3rd 27 T	
12	K20.01304	0735 321 011	(0735 320 822)	2	3.VİTES MASURA BİLYA	NEEDLE CAGE	60x68x23mm
13		0630 501 041		1	2.VİTES MAS.BİL. ÇANAK SEKMANI	RETAINING RING	60x2.40mm
14	K20.00320	1304 304 050		1	2.VİTES MASURA BİLYA ÇANAĞI	BEARING RACE	
15	K20.01462	0750 115 227	(0750 115 970)	1	2.VİTES MASURA BİLYA	NEEDLE CAGE	75x83x40mm
16	K20.00292	1304 304 570		1	2.VİTES DİŞLİSİ 30 DİŞ	GEAR 2nd 30 T	
17	K20.00261	1304 304 408		2	1./2.VİTES KİLİT SENKROMENÇ	ENGAGING RING	
18	K20.00262	1304 304 681	(1304 304 542)	2	1./2.VİTES SENK.FRENLEME	SYNCHRONIZING CONE	
19	K20.00297	1304 304 591	(1324 304 052)	1	1./2.VİTES YILDIZ DİŞLİ	GUIDE SLEEVE	
20	K20.00111	1297 304 436		3	1./2.VİTES YILDIZ DİŞLİ FİŞEĞİ	PRESSURE PIECE	
21	K20.00110	0732 040 409		3	1./2.VİTES YILDIZ DİŞLİ FİŞEK YAYI	SPRING	
22	K20.00255	1304 304 597	(1324 304 053)	1	1./2.VİTES SENK.HALKA	ENGAGING SLEEVE	
23	K20.00305	1304 304 696	(1304 304 569)	1	1.VİTES DİŞLİSİ 33 DİŞ	GEAR 1st 33 T	
24	K20.01307	0735 320 816		2	1.VİTES MASURA BİLYA	NEEDLE CAGE	75x83x23mm
25	K20.00307	1304 304 449		1	KAMALI MİL	MAIN SHAFT	
26	K20.01506	1312 304 150	(1324 304 014)	1	KAMALI MİL YAĞ BORUSU	OIL PIPE	
27	K20.01308	0735 320 500	(0750 115 972)	1	C.VİTES MASURA BİLYA	NEEDLE CAGE	75x83x35mm
28	K20.00309	1304 304 543		1	C VİTES DİŞLİSİ 37 DİŞ	GEAR CRAWLING 37 T	
29	K20.00080	1304 304 443	(1324 304 037)	1	GERİ VİTES YILDIZ DİŞLİ	GUIDE SLEEVE	
30	K20.00311	1304 304 444		1	GERİ VİTES HALKASI	ENGAGING SLEEVE	
31		0630 501 195		1	GERİ VİT.YILDIZ DİŞLİ SEKMANI	RETAINING RING	
32	K20.01309	0750 115 225	(0750 115 973)	1	GERİ VİTES MASURA BİLYA	NEEDLE CAGE	60x68x39mm
33	K20.00462	1304 304 553	(1324 304 021)	1	GERİ VİTES DİŞLİSİ 32 DİŞ	REVERSE GEAR 32 T	
34	K20.01113	0735 371 605		1	KAMALI MİL ARKA BİLYA	ROLLER BEARING	
35	K20.02200	0630 531 064		1	KAMALI MİL ARKA SEKMAN	RETAINING RING	50x2.50mm

Original parts names, oem numbers, symbols and descriptions used in this catalogue are for reference purposes only.

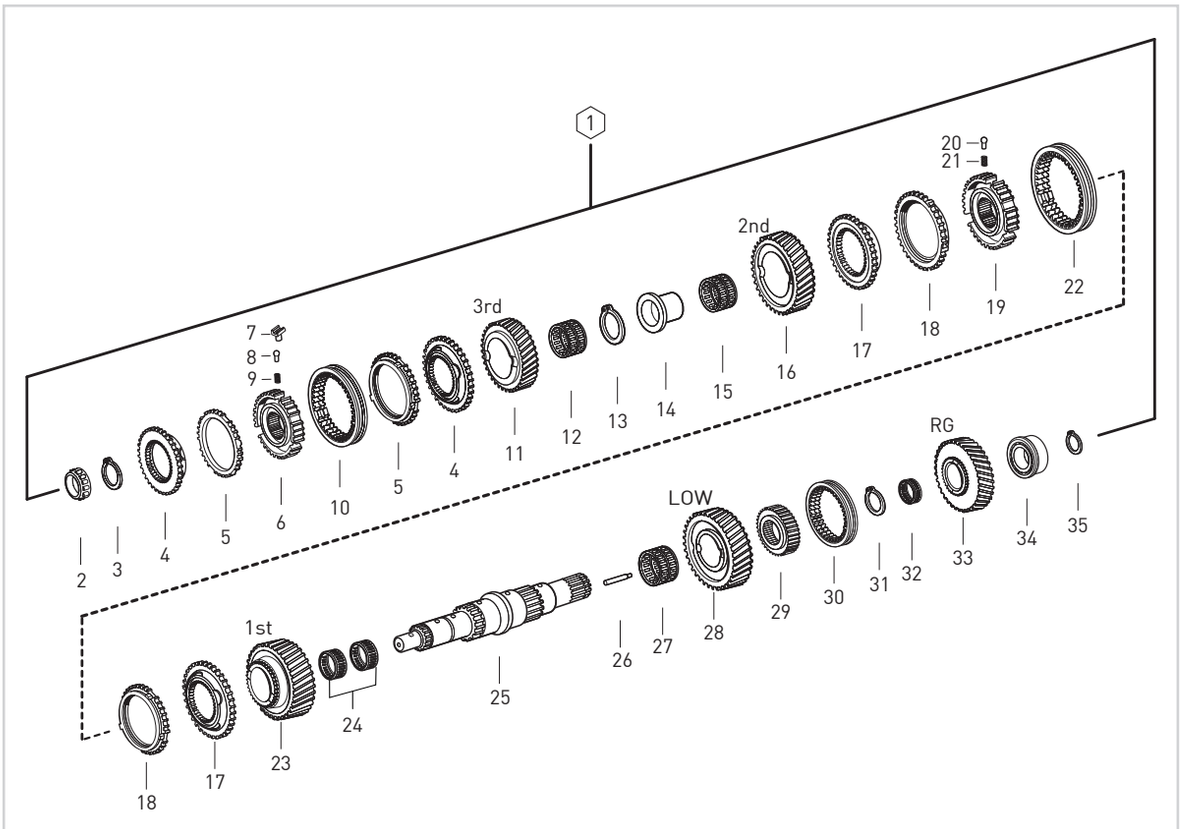

Fig	Kacmaz No.	Oem No	Oem Old No	Pcs.	Ürün Tanımı	Description	Sizes
1	K20.00988	2000988		kit	KAMALI MİL KOMPLE	MAIN SHAFT COMPLETE	
2	K20.01105	0735 371 748	(0750 117 507)	1	KAMALI MİL UÇ BİLYA	ROLLER BEARING	32x29.50mm
3	K20.02138	0630 501 146		1	PRİZ.VE 3.VİT.YILDIZ DİŞ.SEKMANI	RETAINING RING	2.20mm
4	K20.00295	1304 304 660	(1304 304 056)	2	PRİZ.VE 3.VİT.KİLİT SENKROMENÇ	ENGAGING RING	
5	K20.00260	1304 304 683	(1304 304 014)	2	PRİZ. VE 3.VİTES SENK.FRENLEME	SYNCHRONIZING CONE	
6	K20.00296	1304 304 051		1	PRİZ.VE 3.VİT.YILDIZ DİŞLİ	GUIDE SLEEVE	
7	K20.00468	1238 304 394		3	3.VİTES YILDIZ DİŞLİ FİŞEĞİ	PRESSURE PIECE	
8	K20.00467	1249 304 222		3	3.VİTES YILDIZ DİŞLİ PİMİ	PIN	
9	K20.00110	0732 040 409		3	3.VİTES YILDIZ DİŞLİ FİŞEK YAYI	SPRING	
10	K20.00298	6002 305 515	(1304 304 013)	1	PRİZ. VE 3.VİTES SENK.HALKA	ENGAGING SLEEVE	
11	K20.00290	1304 304 500	(1304 304 331)	1	3.VİTES DİŞLİSİ 25 DİŞ	GEAR 3rd 25 T	
12	K20.01304	0735 321 011	(0735 320 822)	2	3.VİTES MASURA BİLYA	NEEDLE CAGE	60x68x23mm
13		0630 501 041		1	2.VİTES MAS.BİL. ÇANAK SEKMANI	RETAINING RING	60x2.40mm
14	K20.00320	1304 304 050		1	2.VİTES MASURA BİLYA ÇANAĞI	BEARING RACE	
15	K20.01462	0750 115 227	(0750 115 970)	1	2.VİTES MASURA BİLYA	NEEDLE CAGE	75x83x40mm
16	K20.00293	1304 304 499		1	2.VİTES DİŞLİSİ 29 DİŞ	GEAR 2nd 29 T	
17	K20.00261	1304 304 408		2	1./2.VİTES KİLİT SENKROMENÇ	ENGAGING RING	
18	K20.00262	1304 304 681	(1304 304 542)	2	1./2.VİTES SENK.FRENLEME	SYNCHRONIZING CONE	
19	K20.00297	1304 304 591	(1324 304 052)	1	1./2.VİTES YILDIZ DİŞLİ	GUIDE SLEEVE	
20	K20.00111	1297 304 436		3	1./2.VİTES YILDIZ DİŞLİ FİŞEĞİ	PRESSURE PIECE	
21	K20.00110	0732 040 409		3	1./2.VİTES YILDIZ DİŞLİ FİŞEK YAYI	SPRING	
22	K20.00255	1304 304 597	(1324 304 053)	1	1./2.VİTES SENK.HALKA	ENGAGING SLEEVE	
23	K20.00306	1304 304 498	(1304 304 337)	1	1.VİTES DİŞLİSİ 33 DİŞ	GEAR 1st 33 T	
24	K20.01307	0735 320 816		2	1.VİTES MASURA BİLYA	NEEDLE CAGE	75x83x23mm
25	K20.00307	1304 304 449		1	KAMALI MİL	MAIN SHAFT	
26	K20.01506	1312 304 150	(1324 304 014)	1	KAMALI MİL YAĞ BORUSU	OIL PIPE	
27	K20.01308	0735 320 500	(0750 115 972)	1	C.VİTES MASURA BİLYA	NEEDLE CAGE	75x83x35mm
28	K20.00310	1304 304 426		1	C VİTES DİŞLİSİ 37 DİŞ	GEAR CRAWLING 37 T	
29	K20.00080	1304 304 443	(1324 304 037)	1	GERİ VİTES YILDIZ DİŞLİ	GUIDE SLEEVE	
30	K20.00311	1304 304 444		1	GERİ VİTES HALKASI	ENGAGING SLEEVE	
31		0630 501 195		1	GERİ VİT.YILDIZ DİŞLİ SEKMANI	RETAINING RING	
32	K20.01309	0750 115 225	(0750 115 973)	1	GERİ VİTES MASURA BİLYA	NEEDLE CAGE	60x68x39mm
33	K20.00312	1304 304 435		1	GERİ VİTES DİŞLİSİ 32 DİŞ	REVERSE GEAR 32 T	
34	K20.01113	0735 371 605		1	KAMALI MİL ARKA BİLYA	ROLLER BEARING	
35	K20.02220	0630 531 064		1	KAMALI MİL ARKA SEKMAN	RETAINING RING	50x2.50mm

Original parts names, oem numbers, symbols and descriptions used in this catalogue are for reference purposes only.

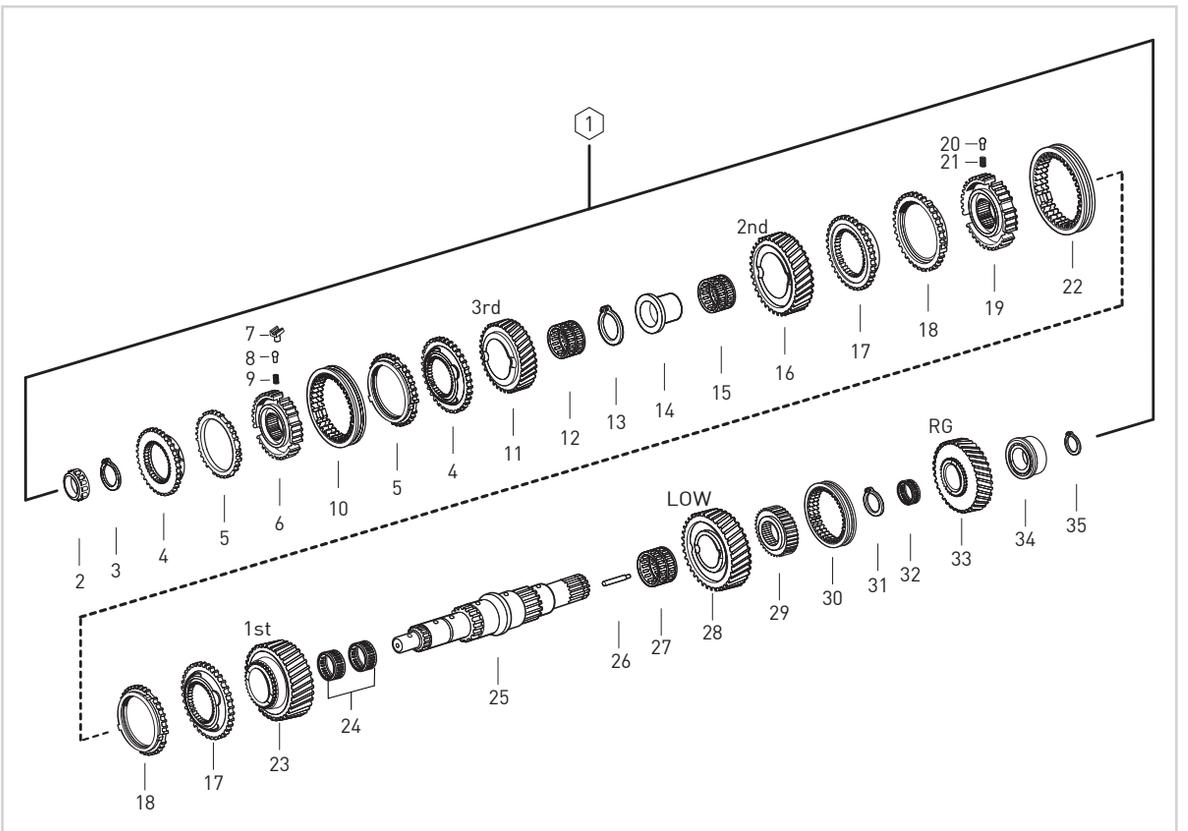

Fig	Kacmaz No.	Oem No	Oem Old No	Pcs.	Ürün Tanımı	Description	Sizes
1	K20.00986	2000986		kit	KAMALI MİL KOMPLE	MAIN SHAFT COMPLETE	
2	K20.01105	0735 371 748	(0750 117 507)	1	KAMALI MİL UÇ BİLYA	ROLLER BEARING	32x29.50mm
3	K20.02138	0630 501 146		1	PRİZ.VE 3.VİT.YILDIZ DİŞ.SEKMANI	RETAINING RING	2.20mm
4	K20.00295	1304 304 660	(1304 304 056)	2	PRİZ.VE 3.VİT.KİLİT SENKROMENÇ	ENGAGING RING	
5	K20.00260	1304 304 683	(1304 304 014)	2	PRİZ. VE 3.VİTES SENK.FRENLEME	SYNCHRONIZING CONE	
6	K20.00296	1304 304 051		1	PRİZ.VE 3.VİT.YILDIZ DİŞLİ	GUIDE SLEEVE	
7	K20.00468	1238 304 394		3	3.VİTES YILDIZ DİŞLİ FİŞEĞİ	PRESSURE PIECE	
8	K20.00467	1249 304 222		3	3.VİTES YILDIZ DİŞLİ PİMİ	PIN	
9	K20.00110	0732 040 409		3	3.VİTES YILDIZ DİŞLİ FİŞEK YAYI	SPRING	
10	K20.00298	6002 305 515	(1304 304 013)	1	PRİZ. VE 3.VİTES SENK.HALKA	ENGAGING SLEEVE	
11	K20.00287	1304 304 472		1	3.VİTES DİŞLİSİ 23 DİŞ	GEAR 3rd 23 T	
12	K20.01304	0735 321 011	(0735 320 822)	2	3.VİTES MASURA BİLYA	NEEDLE CAGE	60x68x23mm
13		0630 501 041		1	2.VİTES MAS.BİL. ÇANAK SEKMANI	RETAINING RING	60x2.40mm
14	K20.00320	1304 304 050		1	2.VİTES MASURA BİLYA ÇANAĞI	BEARING RACE	
15	K20.01462	0750 115 227	(0750 115 970)	1	2.VİTES MASURA BİLYA	NEEDLE CAGE	75x83x40mm
16	K20.00291	1304 304 367		1	2.VİTES DİŞLİSİ 31 DİŞ	GEAR 2nd 31 T	
17	K20.00261	1304 304 408		2	1./2.VİTES KİLİT SENKROMENÇ	ENGAGING RING	
18	K20.00262	1304 304 681	(1304 304 542)	2	1./2.VİTES SENK.FRENLEME	SYNCHRONIZING CONE	
19	K20.00297	1304 304 591	(1324 304 052)	1	1./2.VİTES YILDIZ DİŞLİ	GUIDE SLEEVE	
20	K20.00111	1297 304 436		3	1./2.VİTES YILDIZ DİŞLİ FİŞEĞİ	PRESSURE PIECE	
21	K20.00110	0732 040 409		3	1./2.VİTES YILDIZ DİŞLİ FİŞEK YAYI	SPRING	
22	K20.00255	1304 304 597	(1324 304 053)	1	1./2.VİTES SENK.HALKA	ENGAGING SLEEVE	
23	K20.00303	1304 304 471		1	1.VİTES DİŞLİSİ 32 DİŞ	GEAR 1st 32 T	
24	K20.01307	0735 320 816		2	1.VİTES MASURA BİLYA	NEEDLE CAGE	75x83x23mm
25	K20.00307	1304 304 449		1	KAMALI MİL	MAIN SHAFT	
26	K20.01506	1312 304 150	(1324 304 014)	1	KAMALI MİL YAĞ BORUSU	OIL PIPE	
27	K20.01308	0735 320 500	(0750 115 972)	1	C.VİTES MASURA BİLYA	NEEDLE CAGE	75x83x35mm
28	K20.00308	1304 304 428		1	C VİTES DİŞLİSİ 38 DİŞ	GEAR CRAWLING 38 T	
29	K20.00080	1304 304 443	(1324 304 037)	1	GERİ VİTES YILDIZ DİŞLİ	GUIDE SLEEVE	
30	K20.00311	1304 304 444		1	GERİ VİTES HALKASI	ENGAGING SLEEVE	
31		0630 501 195		1	GERİ VİT.YILDIZ DİŞLİ SEKMANI	RETAINING RING	
32	K20.01309	0750 115 225	(0750 115 973)	1	GERİ VİTES MASURA BİLYA	NEEDLE CAGE	60x68x39mm
33	K20.00353	1304 304 437		1	GERİ VİTES DİŞLİSİ 35 DİŞ	REVERSE GEAR 35 T	
34	K20.01113	0735 371 605		1	KAMALI MİL ARKA BİLYA	ROLLER BEARING	
35	K20.02200	0630 531 064		1	KAMALI MİL ARKA SEKMAN	RETAINING RING	50x2.50mm

Original parts names, oem numbers, symbols and descriptions used in this catalogue are for reference purposes only.

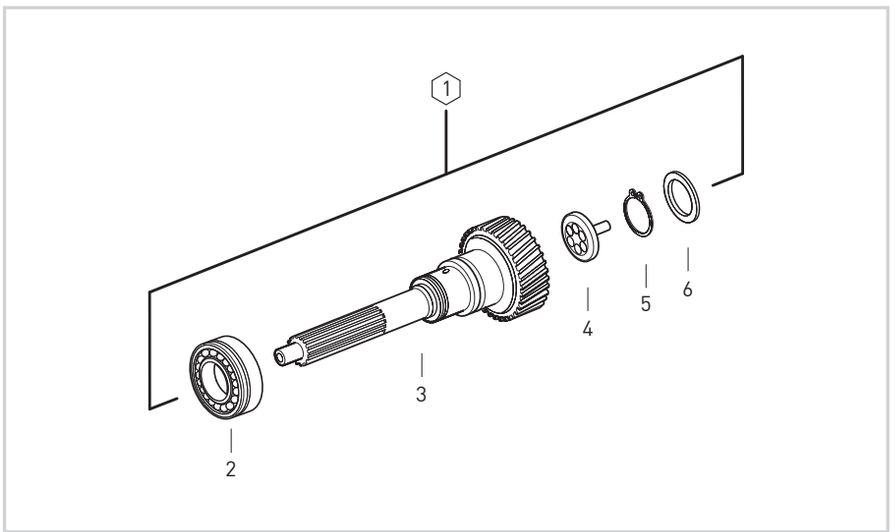

Fig.	Kacmaz No.	Oem No	Oem Old No	Pcs.	Ürün Tanımı	Description	Sizes
1	K20.00989	2000989		kit	PRİZDİREK KOMPLE	INPUTSHAFTCOMPLETE	
2	K20.01101	0750 117 079	(0735 370 233)	1	PRİZDİREK ÖN BİLYA	ROLLER BEARING	66.60x117.40x30.10mm
3	K20.00275	1304 202 168	(1304 302 384)	1	PRİZDİREK 26 DİŞ	INPUT SHAFT 26 T	
4	K20.01501	1304 302 440		1	PRİZDİREK YAĞ PİPETİ	OIL PIPET	
5	K20.01502	0630 502 063		1	PRİZDİREKYAĞPİPETSEKMANI	RETAINING RING	58x2.00mm
6	K20.01010	0501 311 146		1	PRİZDİREK ARKA KEÇE	OIL SEAL	

Fig.	Kacmaz No.	Oem No	Oem Old No	Pcs.	Ürün Tanımı	Description	Sizes
1	K20.00990	2000990		kit	PRİZDİREK KOMPLE	INPUT SHAFT	
2	K20.01101	0750 117 079	(0735 370 233)	1	PRİZDİREK ÖN BİLYA	ROLLERBEARING	66.60x117.40x30.10mm
3	K20.00277	1304 202 177	(1304 302 388)	1	PRİZDİREK 26 DİŞ	INPUTSHAFT26T	
4	K20.01501	1304 302 440		1	PRİZDİREK YAĞ PİPETİ	OIL PIPET	
5	K20.01502	0630 502 063		1	PRİZDİREKYAĞPİPETSEKMANI	RETAININGRING	58x2.00mm
6	K20.01010	0501 311 146		1	PRİZDİREK ARKA KEÇE	OIL SEAL	

Fig.	Kacmaz No.	Oem No	Oem Old No	Pcs.	Ürün Tanımı	Description	Sizes
1	K20.00991	2000991		kit	PRİZDİREK KOMPLE	INPUT SHAFT	
2	K20.01101	0750 117 079	(0735 370 233)	1	PRİZDİREK ÖN BİLYA	ROLLERBEARING	66.60x117.40x30.10mm
3	K20.00575	1304 202 252	(1304 302 490)	1	PRİZDİREK 26 DİŞ	INPUTSHAFT26T	
4	K20.01501	1304 302 440		1	PRİZDİREK YAĞ PİPETİ	OIL PIPET	
5	K20.01502	0630 502 063		1	PRİZDİREKYAĞPİPETSEKMANI	RETAININGRING	58x2.00mm
6	K20.01010	0501 311 146		1	PRİZDİREK ARKA KEÇE	OIL SEAL	

Fig.	Kacmaz No.	Oem No	Oem Old No	Pcs.	Ürün Tanımı	Description	Sizes
1	K20.00992	2000992		kit	PRİZDİREK KOMPLE	INPUT SHAFT	
2	K20.01101	0750 117 079	(0735 370 233)	1	PRİZDİREK ÖN BİLYA	ROLLERBEARING	66.60x117.40x30.10mm
3	K20.00276	1304 202 175	(1304 302 386)	1	PRİZDİREK 26 DİŞ	INPUTSHAFT26T	
4	K20.01501	1304 302 440		1	PRİZDİREK YAĞ PİPETİ	OIL PIPET	
5	K20.01502	0630 502 063		1	PRİZDİREKYAĞPİPETSEKMANI	RETAININGRING	58x2.00mm
6	K20.01010	0501 311 146		1	PRİZDİREK ARKA KEÇE	OIL SEAL	

Original parts names, oem numbers, symbols and descriptions used in this catalogue are for reference purposes only.

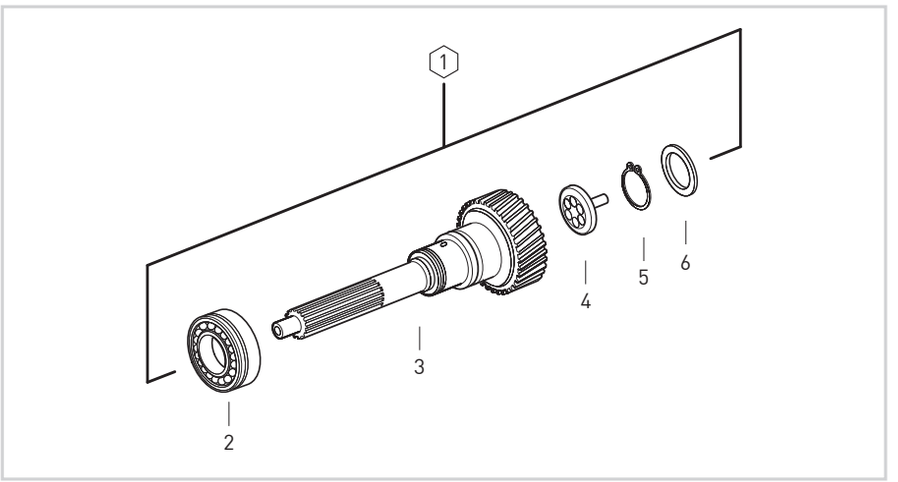

Fig.	Kacmaz No.	Oem No	Oem Old No	Pcs.	Ürün Tanımı	Description	Sizes
1	K20.00993	2000993		kit	PRİZDİREK KOMPLE	INPUT SHAFT COMPLETE	
2	K20.01101	0750 117 079	(0735 370 233)	1	PRİZDİREK ÖN BİLYA	ROLLER BEARING	66.60x117.40x30.10mm
3	K20.00270	1304 202 171	(1304 302 391)	1	PRİZDİREK 27 DİŞ	INPUT SHAFT 27 T	
4	K20.01501	1304 302 440		1	PRİZDİREK YAĞ PİPETİ	OIL PIPET	
5	K20.01502	0630 502 063		1	PRİZDİREK YAĞ PİPET SEKMANI	RETAINING RING	58x2.00mm
6	K20.01010	0501 311 146		1	PRİZDİREK ARKA KEÇE	OIL SEAL	

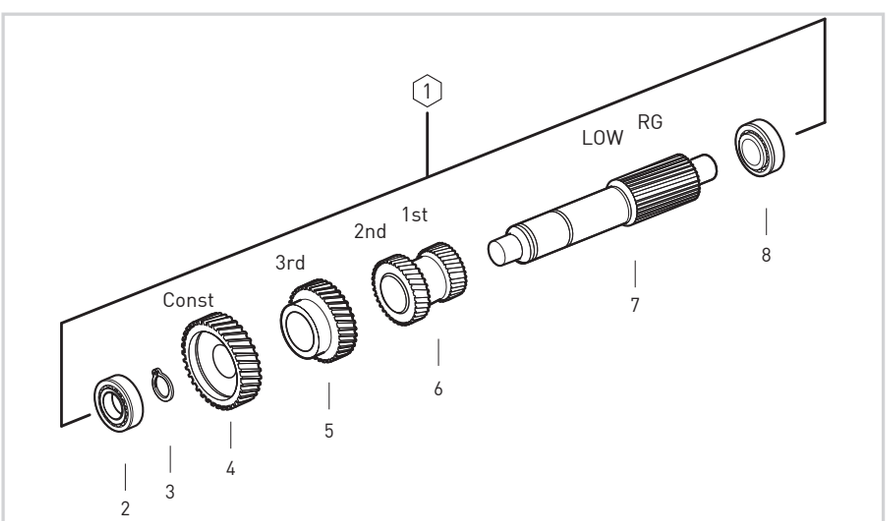

Fig.	Kacmaz No.	Oem No	Oem Old No	Pcs.	Ürün Tanımı	Description	Sizes
1	K20.00996	2000996		kit	GRUP MİLİ KOMPLE	COUNTER SHAFT COMPLETE	
2	K20.01122	0735 371 749	(0750 118 511)	1	GRUP MİLİ ÖN BİLYA	ROLLER BEARING	40x80x32mm
3		0630 531 050		1	GRUP MİLİ ÖN BİLYA SEKMANI	RETAINING RING	40x2.50 mm
4	K20.00281	1304 303 285		1	PRİZDİREK KARŞILIĞI 33 DİŞ	CONSTANT GEAR 33 T	
5	K20.00283	1304 303 210		1	3.VİTES DİŞLİ KARŞILIĞI 38 DİŞ	GEAR 3rd 38 T	
6	K20.00313	1304 303 209		1	1./2.VİTES DİŞLİ KARŞ. 21/28 DİŞ	DOUBLE GEAR 1st/2nd 21/28 T	
7	K20.00317	1304 303 269		1	GRUP MİLİ 16 DİŞ	COUNTER SHAFT 16 T	
8	K20.01123	0750 117 083	(0750 120 067)	1	GRUP MİLİ ARKA BİLYA	ROLLER BEARING	50.80x95.20x27.70mm

Original parts names, oem numbers, symbols and descriptions used in this catalogue are for reference purposes only.

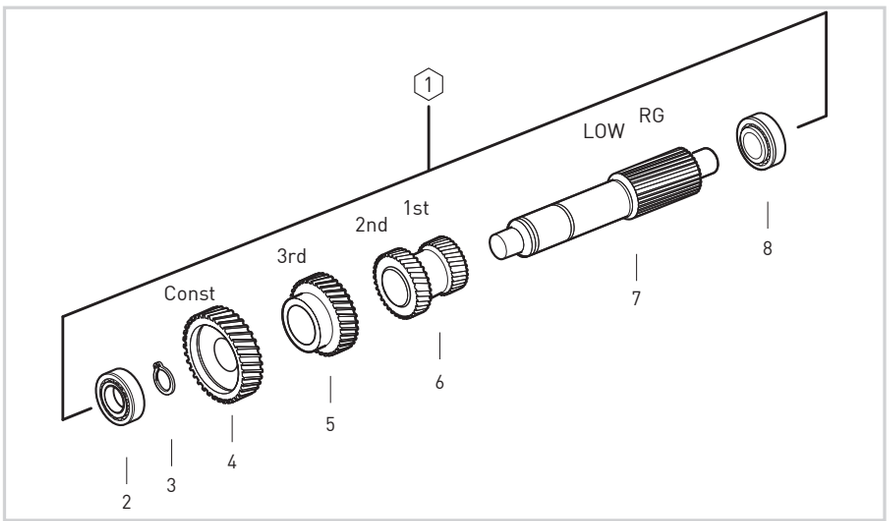

Fig.	Kacmaz No.	Oem No	Oem Old No	Pcs.	Ürün Tanımı	Description	Sizes
1	K20.00994	2000994		kit	GRUP MİLİ KOMPLE	COUNTER SHAFT COMPLETE	
2	K20.01122	0735 371 749	(0750 118 511)	1	GRUP MİLİ ÖN BİLYA	ROLLER BEARING	40x80x32mm
3		0630 531 050		1	GRUP MİLİ ÖN BİLYA SEKMANI	RETAINING RING	40x2.50 mm
4	K20.00282	1304 303 272		1	PRİZDİREK KARŞILIĞI 36 DİŞ	CONSTANT GEAR 36 T	
5	K20.00285	1304 303 287		1	3.VİTES DİŞLİ KARŞILIĞI 28 DİŞ	GEAR 3rd 28 T	
6	K20.00315	1304 303 286		1	1./2.VİTES DİŞLİ KARŞ. 18/23 DİŞ	DOUBLE GEAR 1st/2nd 18/23 T	
7	K20.00318	1304 303 268		1	GRUP MİLİ 14 DİŞ	COUNTER SHAFT 14 T	
8	K20.01123	0750 117 083	(0750 120 067)	1	GRUP MİLİ ARKA BİLYA	ROLLER BEARING	50.80x95.20x27.70mm

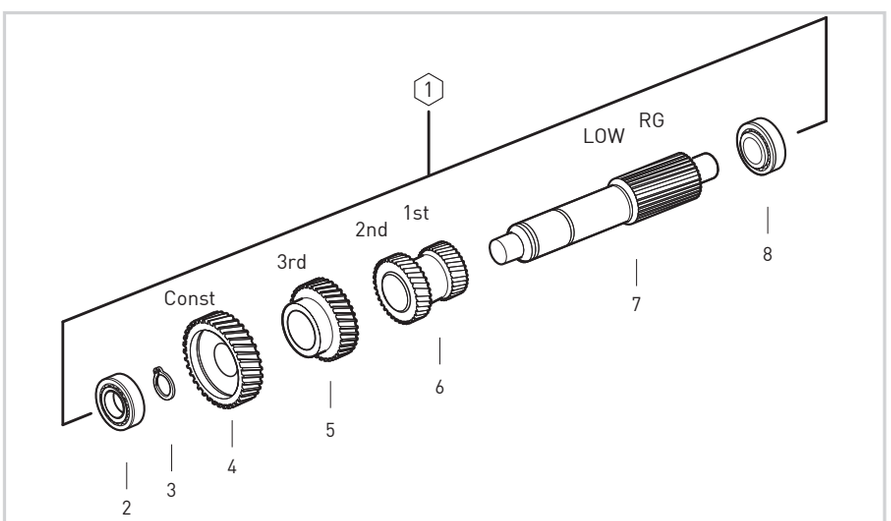

Fig.	Kacmaz No.	Oem No	Oem Old No	Pcs.	Ürün Tanımı	Description	Sizes
1	K20.00995	2000995		kit	GRUP MİLİ KOMPLE	COUNTER SHAFT COMPLETE	
2	K20.01122	0735 371 749	(0750 118 511)	1	GRUP MİLİ ÖN BİLYA	ROLLER BEARING	40x80x32mm
3		0630 531 050		1	GRUP MİLİ ÖN BİLYA SEKMANI	RETAINING RING	40x2.50 mm
4	K20.00282	1304 303 272		1	PRİZDİREK KARŞILIĞI 36 DİŞ	CONSTANT GEAR 36 T	
5	K20.00286	1304 303 244	(1304 303 151)	1	3.VİTES DİŞLİ KARŞILIĞI 27 DİŞ	GEAR 3rd 27 T	
6	K20.00316	1304 303 243	(1304 303 153)	1	1./2.VİTES DİŞLİ KARŞ. 19/23 DİŞ	DOUBLE GEAR 1st/2nd 19/23 T	
7	K20.00319	1304 303 267		1	GRUP MİLİ 14 DİŞ	COUNTER SHAFT 14 T	
8	K20.01123	0750 117 083	(0750 120 067)	1	GRUP MİLİ ARKA BİLYA	ROLLER BEARING	50.80x95.20x27.70mm

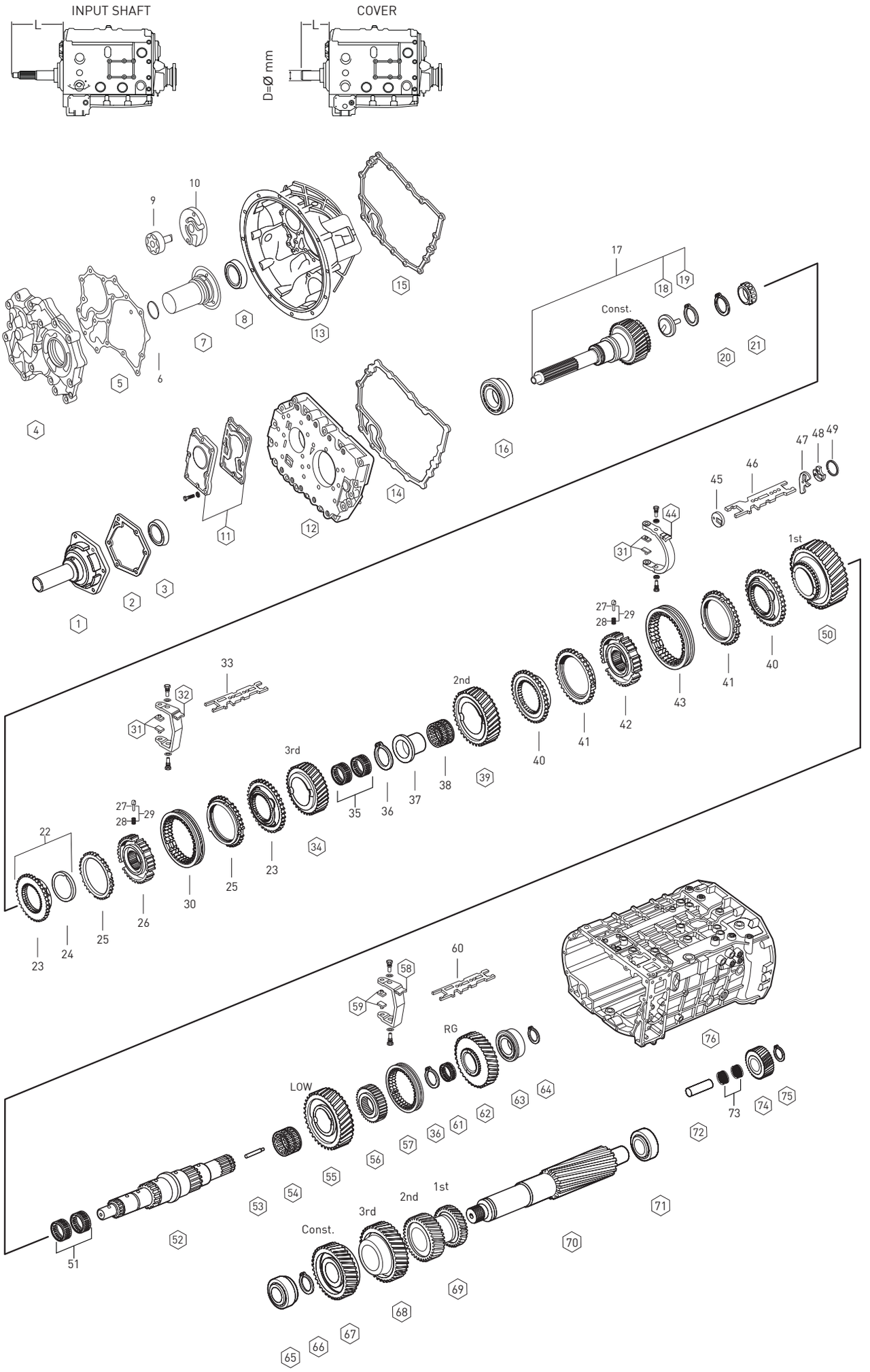

Original parts names, oem numbers, symbols and descriptions used in this catalogue are for reference purposes only.

Fig.	Kacmaz No.	Oem No	Oem Old No	Pcs.	Ürün Tanımı	Description	Sizes	Not	X1) 9 S 1110-1111-1115 TD	X2) 9 S 1110-1111-1115 TO	X3) 9 S 1310-1311-1315 TD	X4) 9 S 1310-1311-1315 TO
1		1304 302 354		1	PRİZDİREK KEÇE KAPAĞI	COVER		(B)	◆		◆	
1		1304 302 350		1	PRİZDİREK KEÇE KAPAĞI	COVER		(F)	◆		◆	
2		0501 322 828		1	PRİZ.KEÇE KAPAK CONTASI	GASKET			◆		◆	
3	K20.01008	0734 310 104		1	P.DİREK KAPAK ÖN KEÇE	OIL SEAL	52x68x8mm		◆		◆	
4		1324 302 026		1	KEÇE KAPAĞI VE YAĞ POMP.KAPAĞI	COVER				◆		◆
4		1324 302 024		1	KEÇE KAPAĞI VE YAĞ POMP.KAPAĞI	COVER				◆		◆
5		0501 322 825		1	KAPAK CONTASI	GASKET				◆		◆
5		1324 302 003		1	KAPAK CONTASI	GASKET				◆		◆
6		0634 313 046		1	KAPAK ORİNGİ	O-RING	74x3mm			◆		◆
7		1324 302 005		1	P.DİREK KEÇE KAPAĞI BORUSU	PIPE				◆		◆
8		0634 349 655		1	P.DİREK KAPAK ÖN KEÇE	OIL SEAL	55x70x10mm			◆		◆
9		0501 215 062		1	YAĞ POMPA DİŞLİ TAKIMI	OIL GEAR SET				◆		◆
10		1324 303 014		1	YAĞ POMPA KAPAĞI	COVER				◆		◆
11	K20.00982	0501 215 245		1	YAĞ POMPASI	OIL PUMP			◆		◆	
12	K20.02119	1324 301 169		1	ŞANZ.ÖN GÖVDE	HOUSING		(B)(F)	◆		◆	
13		1324 201 030		1	ŞANZ.ÖN GÖVDE	HOUSING		(R)(D)		◆		◆
13		1324 201 031		1	ŞANZ.ÖN GÖVDE	HOUSING		(M)		◆		◆
13		1324 201 028		1	ŞANZ.ÖN GÖVDE	HOUSING		(IV)		◆		◆
13		1324 201 058		1	ŞANZ.ÖN GÖVDE	HOUSING		(V)		◆		◆
14	K20.01986	0501 321 065		1	ŞANZ.ÖN GÖVDE CONTASI	GASKET		(B)(F)	◆		◆	
15		0501 321 879		1	ŞANZ.ÖN GÖVDE CONTASI	GASKET		(M)(IV)		◆		◆
15		0501 322 825		1	ŞANZ.ÖN GÖVDE CONTASI	GASKET		(R)		◆		◆
15		1324 302 003		1	ŞANZ.ÖN GÖVDE CONTASI	GASKET		(D)		◆		◆
16	K20.01151	0750 120 290	(0750 117 518)	1	P.DİREK BÜYÜK BİLYA	ROLLER BEARING	71.40x120x32.50mm		◆		◆	
16	K20.01157	0750 117 799		1	P.DİREK BÜYÜK BİLYA	ROLLER BEARING	75x130x27.20mm			◆		◆
17	K20.01805	1324 202 018	(1324 302 031)	1	PRİZDİREK 26 DİŞ	INPUT SHAFT 26 T		(B)	◆		◆	
17	K20.01809	1324 202 033	(1324 302 052)	1	PRİZDİREK 26 DİŞ	INPUT SHAFT 26 T		(F)	◆		◆	
17	K20.01948	1324 202 006		1	PRİZDİREK 26 DİŞ	INPUT SHAFT 26 T		(D)	◆		◆	
17	K20.01806	1324 202 036	(1324 302 056)	1	PRİZDİREK 32 DİŞ	INPUT SHAFT 32 T		(F)		◆		◆
17	K20.01819	1324 202 004	(1324 302 004)	1	PRİZDİREK 32 DİŞ	INPUT SHAFT 32 T		(R)(V)		◆		◆
17	K20.01949	1324 202 012		1	PRİZDİREK 32 DİŞ	INPUT SHAFT 32 T		(IV)(M)		◆		◆
17	K20.00971	1324 202 014	(1324 302 029)	1	PRİZDİREK 32 DİŞ	INPUT SHAFT 32 T				◆		◆
18	K20.01501	1304 302 440		1	PRİZDİREK YAĞ BORUSU	PIPE			◆	◆	◆	◆
19		0630 501 063		1	PRİZDİREK YAĞ BORU SEGMANI	RETAINING RING	58x2mm		◆	◆	◆	◆
20		0630 501 120		1	KAMALI MİL UÇ BİLYA SEGMANI	RETAINING RING	42x2.40mm		◆	◆	◆	◆
20		0630 501 156		1	KAMALI MİL UÇ BİLYA SEGMANI	RETAINING RING	42x2.30mm		◆	◆	◆	◆
20		0630 501 210		1	KAMALI MİL UÇ BİLYA SEGMANI	RETAINING RING	42x2.20mm		◆	◆	◆	◆
20		0630 501 208		1	KAMALI MİL UÇ BİLYA SEGMANI	RETAINING RING	42x2.10mm		◆	◆	◆	◆
20		0630 501 157		1	KAMALI MİL UÇ BİLYA SEGMANI	RETAINING RING	42x2.00mm		◆	◆	◆	◆
21	K20.01109	0750 117 232	(0735 371 563)	1	KAMALI MİL UÇ BİLYA	ROLLER BEARING	42x40.39mm		◆	◆	◆	◆
22	K20.00975	1324 204 009		1	PRİZ./3.VİTES SEKNROMENÇ TAKIM	ENGAGING RING SET			◆	◆	◆	◆

NOTES :

X1,X2,X3,X4 are used in conjunction with the encoded parts.
Alphabetical cooding has been done according to Input Shaft.

NOTLAR :

X1,X2,X3,X4 ile kodlanan parçalar birlikte kullanılır.
Alfabetik kodlamalar prizdireklere göre yapılmıştır.

Original parts names, oem numbers, symbols and descriptions used in this catalogue are for reference purposes only.

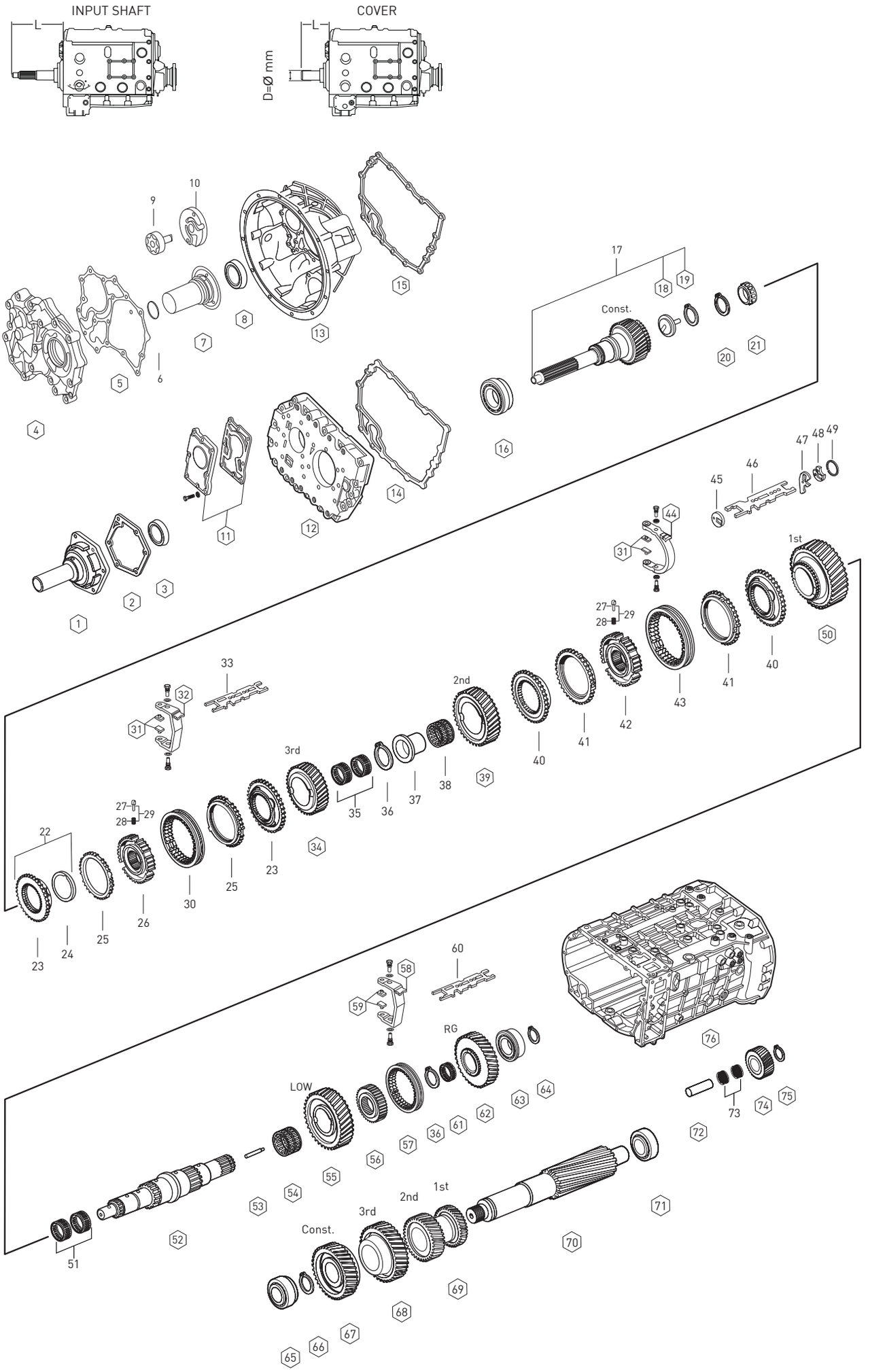

Original parts names, oem numbers, symbols and descriptions used in this catalogue are for reference purposes only.

Fig.	Kacmaz No.	Oem No	Oem Old No	Pcs.	Ürün Tanımı	Description	Sizes	Notes	X1:9S 1110-1111-1115 TD	X2:9S 1110-1111-1115 TO	X3:9S 1310-1311-1315 TD	X4:9S 1310-1311-1315 TO
23	K20.00966	1324 304 011		2	PRİZ./3.VİTES SEKNROMENÇ	ENGAGING RING			◆	◆	◆	◆
24	K20.01041	0501 314 108		1	PRİZDİREK KIL KEÇESİ	OIL SEAL	79x105.10x53mm		◆	◆	◆	◆
25	K20.00916	1311 304 255		2	PRİZ./3.VİTES FRENLEME	SYNCHRONIZING CONE			◆	◆	◆	◆
26	K20.00962	1324 304 006		1	PRİZ./3.VİTES YILDIZ DİŞLİ	GUIDE SLEEVE			◆	◆	◆	◆
27	K20.00111	1297 304 436		6	PRİZ-3.-2.-1.VİT.YIL.DİŞLİ FİŞEĞİ	PRESSURE PIECE			◆	◆	◆	◆
28	K20.00110	0732 040 409		6	PRİZ-3.-2.-1.VİT.YIL.DİŞLİ FİŞEK YAYI	SPRING			◆	◆	◆	◆
29	K20.01745	1295 298 956		kit	YILDIZ DİŞLİ YAY FİŞEK TAKIMI	REPAİR KİT			◆	◆	◆	◆
30	K20.01785	1311 304 103		1	PRİZ./3.VİTES SENK.HALKA	ENGAGING SLEEVE			◆	◆	◆	◆
31	K20.00169	1290 306 066		4	PRİZ-3.-2.-1.VİT. HİLAL PABUCU	SLIDING PAD			◆		◆	
31	K20.02131	1304 306 107		4	PRİZ-3.-2.-1.VİT. HİLAL PABUCU	SLIDING PAD				◆		◆
32		1324 306 032		1	PRİZ./3.VİTES HİLALİ	GEAR SHIFT FORK			◆		◆	
32		1324 306 031		1	PRİZ./3.VİTES HİLALİ	GEAR SHIFT FORK				◆		◆
33		1324 306 027		1	PRİZ./3.VİTES HİLAL ÇITASI	GEAR SHIFT RAIL			◆	◆	◆	◆
34	K20.00959	1324 304 085	(1324 304 009)	1	3.VİTES DİŞLİSİ 27 DİŞ	GEAR 3rd 27 T			◆		◆	
34	K20.00976	1324 304 003	(1324 304 080)	1	3.VİTES DİŞLİSİ 27 DİŞ	GEAR 3rd 27 T				◆		◆
35	K20.01463	0750 115 969		2	3.VİTES MASURA BİLYA	NEEDLE CAGE	60x68x25mm		◆	◆	◆	◆
36		0630 501 278		2	3./GERİ VİTES YILDIZ DİŞLİ SEGMANI	RETAINING RING	1.90mm		◆	◆	◆	◆
36		0630 501 041		2	3./GERİ VİTES YILDIZ DİŞLİ SEGMANI	RETAINING RING	2.00mm		◆	◆	◆	◆
36		0630 501 070		2	3./GERİ VİTES YILDIZ DİŞLİ SEGMANI	RETAINING RING	2.10mm		◆	◆	◆	◆
36	K20.02139	0630 501 069		2	3./GERİ VİTES YILDIZ DİŞLİ SEGMANI	RETAINING RING	2.20mm		◆	◆	◆	◆
36		0630 501 068		2	3./GERİ VİTES YILDIZ DİŞLİ SEGMANI	RETAINING RING	2.30mm		◆	◆	◆	◆
36		0630 501 067		2	3./GERİ VİTES YILDIZ DİŞLİ SEGMANI	RETAINING RING	2.40mm		◆	◆	◆	◆
36		0630 531 141		2	3./GERİ VİTES YILDIZ DİŞLİ SEGMANI	RETAINING RING	2.50mm		◆	◆	◆	◆
37	K20.00320	1324 304 070	(1304 304 064)	1	3.VİTES MASURA BİLYA BURCU	BEARING RACE			◆	◆	◆	◆
			(1304 304 050)									
38	K20.01462	0750 115 970	(0750 115 227)	1	2.VİTES MASURA BİLYA	NEEDLE CAGE	75x83x40mm		◆	◆	◆	◆
39	K20.01788	1324 304 015		1	2.VİTES DİŞLİSİ 30 DİŞ	GEAR 2nd 30 T			◆	◆	◆	◆
40	K20.00965	1324 304 013		2	1./2.VİT.SENKOMENÇ	ENGAGING RING			◆	◆	◆	◆
41	K20.00781	1268 304 594	(1268 304 445)	2	1./2.VİT.SENK.FRENLEME	SYNCRONIZING CONE			◆	◆	◆	◆
42	K20.00297	1324 304 052	(1304 304 591)	1	1./2.VİT.YILDIZ DİŞLİ	GUIDE SLEEVE			◆	◆	◆	◆
43	K20.00255	1324 304 053	(1304 304 597)	1	1./2.VİT.SENK.HALKA	ENGAGING SLEEVE			◆	◆	◆	◆
			(1304 304 541)									
44		1324 306 013		1	1./2.VİTES HİLALİ	GEAR SHIFT FORK			◆		◆	
44		1324 306 036		1	1./2.VİTES HİLALİ	GEAR SHIFT FORK				◆		◆
45		1304 306 089		1	YATAK PLAKASI	BEARING PLATE			◆	◆	◆	◆
46		1324 306 026		1	VİTES ÇUBUĞU	GEAR SHIFT RAIL			◆	◆	◆	◆
46		1324 306 027		1	VİTES ÇUBUĞU	GEAR SHIFT RAIL			◆	◆	◆	◆
47		1324 306 034		1	KİTLEME KOLU	LOCKING LEVER			◆	◆	◆	◆
48		1304 306 090		1	YATAK PLAKASI	BEARING PLATE			◆	◆	◆	◆
49		0730 300 430		1	KİTLEME SEGMANI	RETAINING RING			◆	◆	◆	◆
50	K20.00977	1324 304 030		1	1.VİTES DİŞLİSİ 33 DİŞ	GEAR 1st 33 T			◆	◆	◆	◆

NOTES :

X1,X2,X3,X4 are used in conjunction with the encoded parts.

NOTLAR :

X1,X2,X3,X4 ile kodlanan parçalar birlikte kullanılır.

Original parts names, oem numbers, symbols and descriptions used in this catalogue are for reference purposes only.

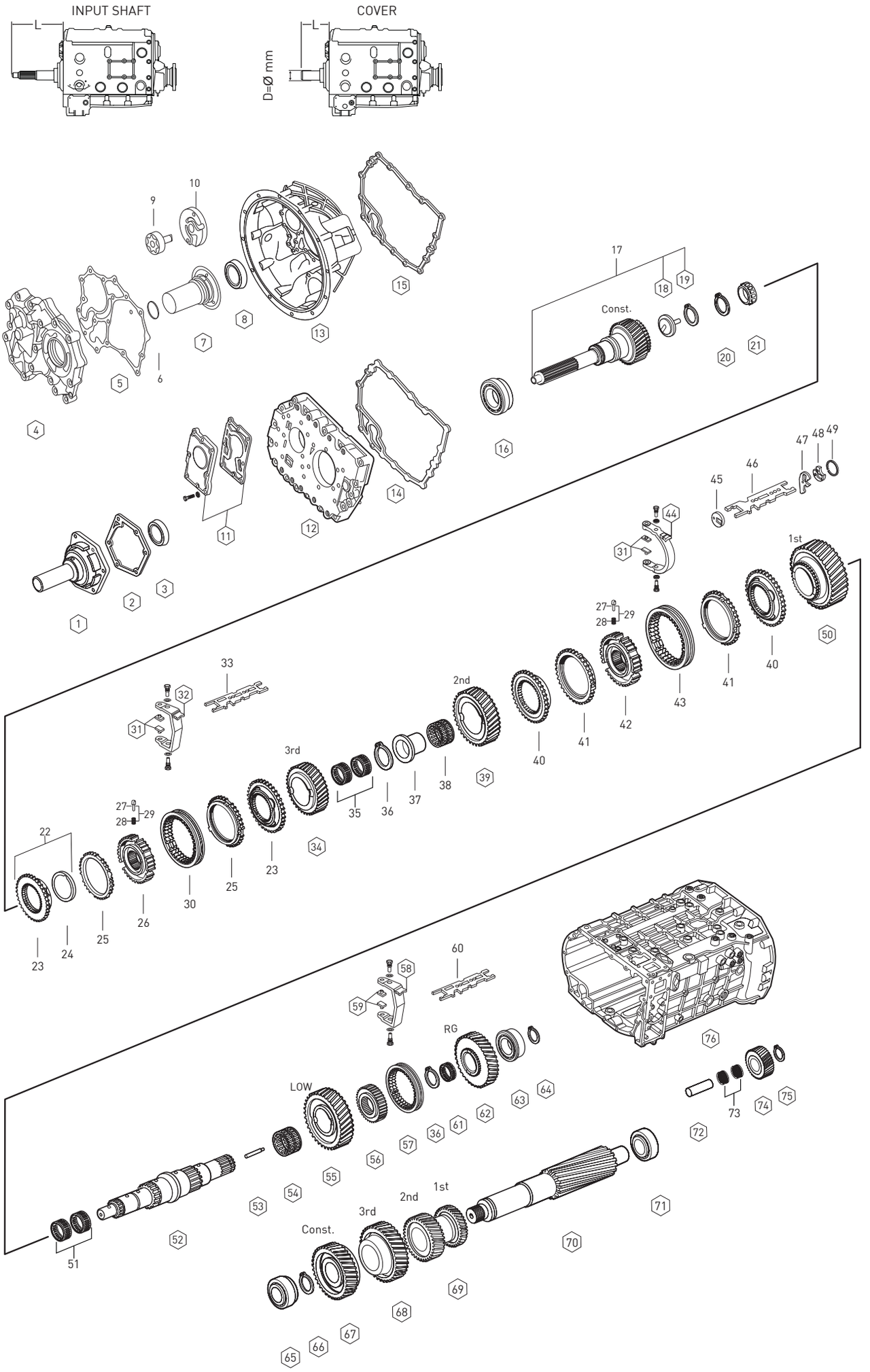

Original parts names, oem numbers, symbols and descriptions used in this catalogue are for reference purposes only.

Fig.	Kacmaz No.	Oem No	Oem Old No	Pcs.	Ürün Tanımı	Description	Sizes	Notes	X1):9S1110-1111-1115TD	X2):9S1110-1111-1115TO	X3):9S1310-1311-1315TD	X4):9S1310-1311-1315TO
51	K20.01307	0750 115 971	(0735 320 816)	2	1.VİTES DİŞLİ MASURA BİLYA	NEEDLE CAGE	75x83x23mm		◆	◆	◆	◆
52	K20.00961	1324 304 005		1	KAMALI MİL	MAIN SHAFT			◆	◆	◆	◆
53	K20.01506	1324 304 014	(1312 304 150)	1	KAMALI MİL YAĞ BORUSU	OIL PIPE			◆	◆	◆	◆
54	K20.01308	0750 115 972	(0735 320 500)	1	C.VİT.MASURA BİLYA	NEEDLE CAGE	75x83x35mm		◆	◆	◆	◆
55	K20.00309	1304 304 543		1	C.VİTES DİŞLİSİ 37 DİŞ	GEAR CRAWLING GEAR 37 T			◆	◆	◆	◆
56	K20.00080	1324 304 037	(1304 304 443)	1	C.VİT.YILDIZ DİŞLİ	HUB			◆	◆	◆	◆
57	K20.00311	1304 304 444		1	GERİ VİT.HALKASI	ENGAGING SLEEVE			◆	◆	◆	◆
58		1324 306 039		1	C VE GERİ VİTES HİLALİ	GEAR SHIFT FORK			◆	◆	◆	◆
59	K20.00325	1316 306 015		1	C VE GERİ VİTES HİLAL PABUCU	SLIDING PAD			◆	◆	◆	◆
60		1324 306 025	(1324 306 042)	1	VİTES ÇUBUĞU	GEAR SHIFT RAIL			◆	◆	◆	◆
61	K20.01309	0750 115 973	(0750 115 225)	1	GERİ VİTES MASURA BİLYA	NEEDLE CAGE	60x68x39mm		◆	◆	◆	◆
62	K20.00462	1324 304 021	(1304 304 553)	1	GERİ VİTES DİŞLİSİ 35 DİŞ	REVERSE GEAR 35 T			◆	◆	◆	◆
63	K20.01155	0750 117 844		1	KAMALI ARKA BİLYA	ROLLER BEARING	50.80x104.70x36.50mm		◆	◆	◆	◆
64	K20.02200	0630 531 064		1	KAMALI MİL ARKA SEGMANI	RETAINING RING	50x2.50mm		◆	◆	◆	◆
64		0630 501 118		1	KAMALI MİL ARKA SEGMANI	RETAINING RING	50x2.60mm		◆	◆	◆	◆
64		0630 501 116		1	KAMALI MİL ARKA SEGMANI	RETAINING RING	50x2.70mm		◆	◆	◆	◆
64		0630 501 114		1	KAMALI MİL ARKA SEGMANI	RETAINING RING	50x2.80mm		◆	◆	◆	◆
64		0630 501 112		1	KAMALI MİL ARKA SEGMANI	RETAINING RING	50x2.90mm		◆	◆	◆	◆
64		0630 501 111		1	KAMALI MİL ARKA SEGMANI	RETAINING RING	50x2.95mm		◆	◆	◆	◆
65	K20.01154	0750 117 881	(0735 371 096)	1	GRUP MİLİ ÖN BİLYA	ROLLER BEARING	40x85x33mm		◆	◆	◆	◆
66		0630 501 040		1	GRUP MİLİ ÖN BİLYA SEGMANI	RETAINING RING	58x2mm		◆	◆	◆	◆
67	K20.01790	1324 303 007		1	PRİZ.DİŞLİ KARŞILIĞI 36 DİŞ	CONSTANT GEAR 36 T			◆		◆	
67	K20.01795	1324 303 004		1	PRİZ.DİŞLİ KARŞILIĞI 33 DİŞ	CONSTANT GEAR 33 T				◆		◆
68	K20.00964	1324 303 018		1	3.VİTES DİŞLİ KARŞILIĞI 28 DİŞ	GEAR 3rd 28 T			◆		◆	
68	K20.00972	1324 303 003		1	3.VİTES DİŞLİ KARŞILIĞI 37 DİŞ	GEAR 3rd 37 T				◆		◆
69	K20.00963	1324 303 017	(1324 303 015)	1	1./2.VİT.DİŞLİ KARŞ.18-23 DİŞ	DOUBLE GEAR 1st/2nd T			◆	◆	◆	◆
70	K20.00960	1324 303 001		1	GRUP MİLİ 14 DİŞ	COUNTER SHAFT 14 T			◆	◆	◆	◆
71	K20.01123	0750 117 083	(0750 120 291)	1	GRUP MİLİ ARKA BİLYA	ROLLER BEARING	50.80x95.20x27.70mm		◆	◆	◆	◆
			(0750 120 067)									
			(1246 203 007)									
72	K20.00576	1304 305 030	(1304 305 002)	1	KÜÇÜK GERİ VİTES PİMİ	PIN			◆	◆	◆	◆
73	K20.01333	0750 115 974	(0735 358 192)	2	KÜÇÜK GERİ VİT.MAS.BİLYA	NEEDLE CAGE			◆	◆	◆	◆
			(0750 115 229)									
74	K20.01950	1324 305 001		1	K.GERİ VİTES DİŞLİSİ 21 DİŞ	REV.IDLER GEAR 21 T			◆	◆	◆	◆
75		0630 502 022		1	K.GERİ VİTES DİŞLİ SEGMANI	RETAINING RING	40x1.75mm		◆	◆	◆	◆
76		1324 201 041		1	ŞANZIMAN ORTA GÖVDE	HOUSING		(B)(F)	◆		◆	
76		1324 201 045		1	ŞANZIMAN ORTA GÖVDE	HOUSING		(F)		◆		◆
76		1324 201 033		1	ŞANZIMAN ORTA GÖVDE	HOUSING		(R)(V)		◆		◆
76		1324 201 029		1	ŞANZIMAN ORTA GÖVDE	HOUSING		(M)(IV)		◆		◆
76		1324 201 025		1	ŞANZIMAN ORTA GÖVDE	HOUSING		(D)		◆		◆

NOTES :

X1,X2,X3,X4 are used in conjunction with the encoded parts.
Alphabetical cooding has been done according to Input Shaft.

NOTLAR :

X1,X2,X3,X4 ile kodlanan parçalar birlikte kullanılır.
Alfabetik kodlamalar prizdireklere göre yapılmıştır.

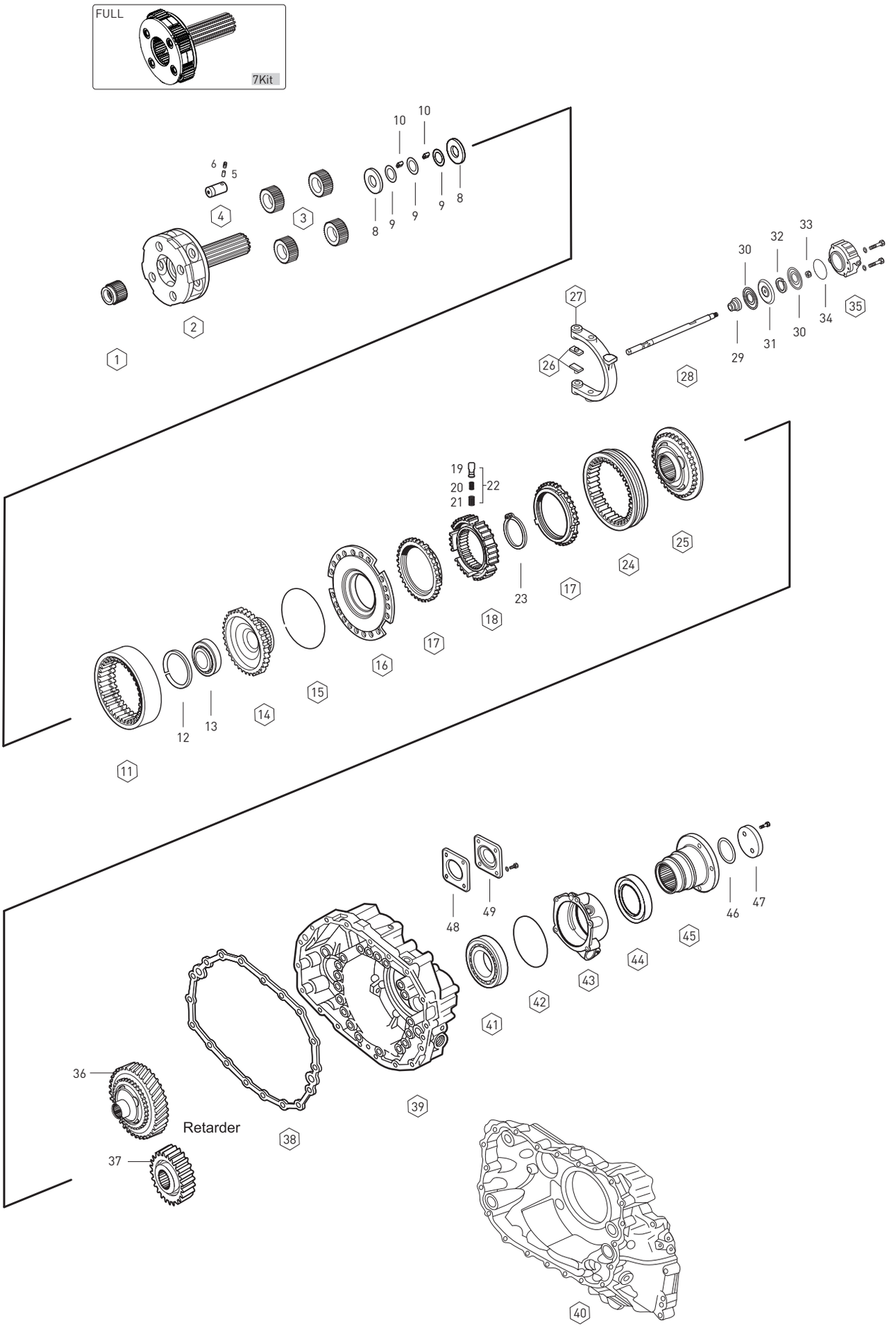

Original parts names, oem numbers, symbols and descriptions used in this catalogue are for reference purposes only.

Fig.	Kacmaz No.	Oem No	Oem Old No	Pcs.	Ürün Tanımı	Description	Sizes	Notes	X1:9S 1110-1111-1115TD	X2:9S 1110-1111-1115TO	X3:9S 1310-1311-1315TD	X4:9S 1310-1311-1315TO
1	K20.01784	1324 304 028		1	GÜNEŞ DİŞLİ 46 DİŞ	SUN GEAR 46 T			◆	◆	◆	◆
2	K20.00979	1324 232 004		1	ŞANZIMAN HEYKELİ	PLANETARY CARRIER			◆	◆	◆	◆
3	K20.01787	1324 232 002		1	HEYKEL KOZA DİŞLİ TAKIMI	PLANETARY GEAR SET			◆	◆	◆	◆
4	K20.01789	1324 332 016		4	HEYKEL KOZA DİŞLİ PİMİ	PLANETARY SHAFT			◆	◆	◆	◆
5		0631 329 049		4	KOZA DİŞLİ PİMİ	PIN			◆	◆	◆	◆
6		0631 329 175		4	KOZA DİŞLİ PİMİ	PIN			◆	◆	◆	◆
7	K20.01066	1324 232 004		1	ŞANZIMAN HEYKELİ (DOLU)	PLANETARY CARRIER	FULL		◆	◆	◆	◆
8	K20.01508	0730 150 767	(0501 304 692)	10	HEYKEL KOZA DİŞLİ PULU	THRUST WASHER			◆	◆	◆	◆
9	K20.01509	0730 103 102		12	HEYKEL KOZA DİŞLİ PULU	THRUST WASHER			◆	◆	◆	◆
10	K20.01451	0735 470 115		160	HEYK.KOZA DİŞ.TANE BİL.	NEEDLE ROLLER	5x15.30mm		◆	◆	◆	◆
11	K20.00981	1324 332 018		1	ÇEMBER DİŞLİ 114 DİŞ	RING WHEEL 114 T			◆	◆	◆	◆
12		0730 513 758		1	ÇEMBER DİŞLİ BİLYA SEGMANI	RETAINING RING	2.20mm		◆	◆	◆	◆
13		0750 116 482	(0735 330 804)	1	ÇEMBER DİŞLİ BİLYASI	ROLLER BEARING	70x110x13mm		◆	◆	◆	◆
14	K20.00980	1324 332 048	(1324 332 007)	1	PLANET ÇAN DİŞLİ 114 DİŞ	CARRIER HUB			◆	◆	◆	◆
15		0730 505 053		1	ÇEMBER DİŞLİ SEGMANI	SPRING RING			◆	◆	◆	◆
16	K20.00230	1304 233 006	(1324 233 006)	1	TEPSİ SENKROMENÇ	FLANGE			◆	◆	◆	◆
			(1304 233 011)									
17	K20.00038	1296 333 045	(1296 333 022)	2	AĞIR SERİ SENK.FRENLEME	SYNCHRONIZING CONE			◆	◆	◆	◆
			(0769 174 091)									
18	K20.00185	1313 333 001		1	AĞIR SERİ YILDIZ DİŞLİ	GUIDE SLEEVE			◆	◆	◆	◆
19	K20.00471	1240 304 278		9	AĞIR SERİ YILDIZ DİŞLİ YAYI	PRESSURE PIECE			◆	◆	◆	◆
20	K20.00469	0732 040 385		9	AĞIR SERİ YILDIZ DİŞLİ YAYI	SPRING			◆	◆	◆	◆
21	K20.00470	0732 040 386		9	AĞIR SERİ YILDIZ DİŞ.FİŞEĞİ	SPRING			◆	◆	◆	◆
22	K20.00474	1295 298 933		1	YILDIZ DİŞLİ YAY FİŞEK TK.	REPAIR KIT			◆	◆	◆	◆
23		0630 501 175		1	YILDIZ DİŞLİ SEGMANI	RETAINING RING	3.70mm		◆	◆	◆	◆
23		0630 501 174		1	YILDIZ DİŞLİ SEGMANI	RETAINING RING	3.80mm		◆	◆	◆	◆
23		0630 501 173		1	YILDIZ DİŞLİ SEGMANI	RETAINING RING	3.90mm		◆	◆	◆	◆
23		0630 501 061		1	YILDIZ DİŞLİ SEGMANI	RETAINING RING	4.00mm		◆	◆	◆	◆
24	K20.00267	1304 333 011		1	AĞIR SERİ HALKA	ENGAGING SLEEVE			◆	◆	◆	◆
25	K20.00841	1324 233 001		1	SERİ SENKROMENÇ	ENGAGING RING			◆	◆	◆	◆
26	K20.00328	1272 334 003		2	AĞIR SERİ HİLAL PABUCU	SLIDING PAD			◆	◆	◆	◆
27		1304 334 063		1	AĞIR SERİ HİLALİ	GEAR SHIFT FORK			◆	◆	◆	◆
28		1324 334 009		1	AĞIR SERİ HİLAL MİLİ	GEAR SHIFT RAIL			◆	◆	◆	◆
29	K20.01017	0750 112 047		1	ŞAPKALI KEÇE	FLANGE PACKING	22x36x14ç50mm		◆	◆	◆	◆
30	K20.01018	0734 307 287		2	AĞIR SERİ KEÇESİ	SEAL RING	50x100x7.50mm		◆	◆	◆	◆
31	K20.02128	1315 334 041		1	AĞIR SERİ HİLAL MİL PİSTONU	PISTON			◆	◆	◆	◆
32	K20.01614	0750 112 096		1	AĞIR SERİ HİLAL MİL FİBERİ	GUIDE RING			◆	◆	◆	◆
33	K20.01774	0737 300 037		1	AĞIR SERİ HİLAL MİL SOMUNU	NUT	M16x1.50mm		◆	◆	◆	◆
34	K20.02135	0634 313 338		1	AĞIR SERİ SİLİNDİR ORİNGİ	O-RING	108x3mm		◆	◆	◆	◆
35	K20.00888	1304 334 079	(1304 334 073)	1	AĞIR SERİ SİLİNDİR GÖVDESİ	CYLINDER			◆	◆	◆	◆
36	K20.00323	1304 232 085	(1304 232 083)	1	SERİ SENKROMENÇ 55 DİŞ	ENGAGING RING 55 T	RETARDER		◆	◆	◆	◆

NOTES :

X1,X2,X3,X4 are used in conjunction with the encoded parts.

NOTLAR :

X1,X2,X3,X4 ile kodlanan parçalar birlikte kullanılır.

Original parts names, oem numbers, symbols and descriptions used in this catalogue are for reference purposes only.

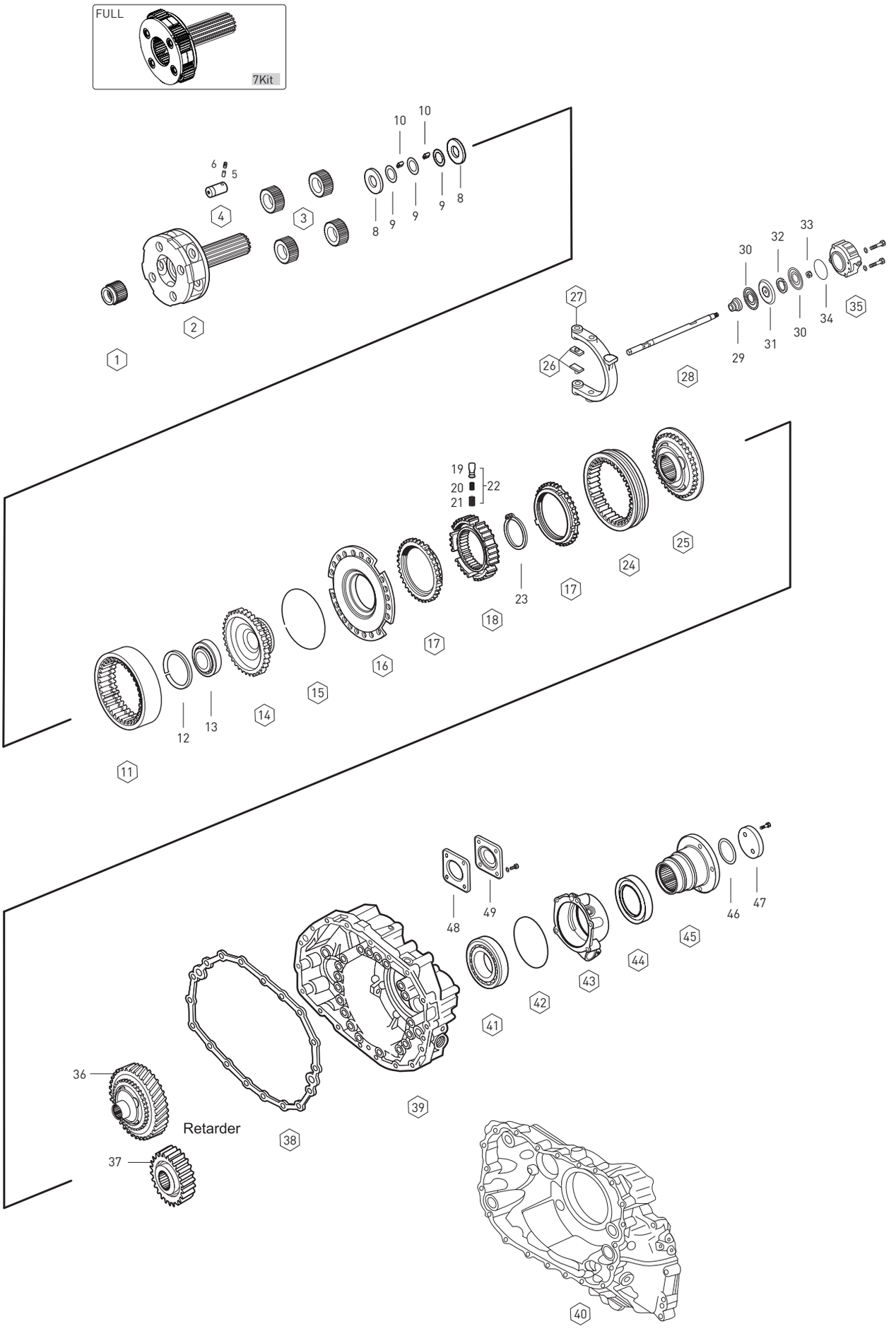

Original parts names, oem numbers, symbols and descriptions used in this catalogue are for reference purposes only.

Fig.	Kacmaz No.	Oem No	Oem Old No	Pcs.	Ürün Tanımı	Description	Sizes	Notes	X1;9S1110-1111-1115TD	X2;9S1110-1111-1115TO	X3;9S1310-1311-1315TD	X4;9S1310-1311-1315TO
37	K20.00584	6085 301 003		1	RETARDER DİŞLİSİ	GEAR	RETARDER		◆	◆	◆	◆
38		1304 301 305		1	KAPAK CONTASI	GASKET			◆	◆	◆	◆
39		1324 301 176		1	ŞANZIMAN ARKA GÖVDE	HOUSING			◆	◆	◆	◆
40		1304 201 043		1	ŞANZUMAN ARKA GÖVDE	HOUSING	RETARDER		◆	◆	◆	◆
41	K20.01156	0750 116 404	(0750 116 197)	1	ŞANZIMAN ARKA BİLYA	ROLLER BEARING			◆	◆	◆	◆
42		0631 349 953		1	ŞANZ. ARKA KEÇE KAPAK ORİNGİ	O-RING	138x3mm		◆	◆	◆	◆
43		1304 301 410		1	ŞANZIMAN ARKA KEÇE KAPAĞI	COVER			◆	◆	◆	◆
44	K20.01022	0734 319 459	(0734 300 421)	1	ŞANZIMAN ARKA KEÇE	OIL SEAL	105x125x12mm		◆	◆	◆	◆
45		1324 338 004		1	ŞANZIMAN FLANŞI	COMP.FLANGE			◆	◆	◆	◆
46	K20.02136	0634 313 223		1	ŞANZIMAN FLANŞ ORİNGİ	O-RING			◆	◆	◆	◆
47	K20.01626	1304 338 045		1	ŞANZIMAN FLANŞ PULU	WASHER			◆	◆	◆	◆
48	K20.02108	1238 308 201	(1238 308 166)	1	PTO BAĞLANTI KAPAK CONTASI	GASKET			◆	◆	◆	◆
49		1304 301 034		1	PTO BAĞLANTI KAPAĞI	COVER			◆	◆	◆	◆

NOTES :

X1,X2,X3,X4 are used in conjunction with the encoded parts.

NOTLAR :

X1,X2,X3,X4 ile kodlanan parçalar birlikte kullanılır.

Original parts names, oem numbers, symbols and descriptions used in this catalogue are for reference purposes only.

SYNCHRONIZER KIT Const./3rd

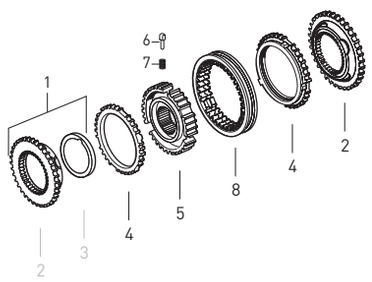

Fig.	Kacmaz No.	Oem No	Oem Old No	Pcs.	Ürün Tanımı	Description
	K20.01883	1324 298 004		kit	PRİZ./3.VİT.SENK.TAKIMI	SYNCH.KIT Const./3rd
1	K20.00975	1324 204 009		kit	PRİZ./3.VİT.SENK.TAKIMI	ENGAGING RING SET
2	K20.00966	1324 304 011		1	PRİZ./3.VİT.SENKROMENÇ	ENGAGING RING
3	K20.01041	0501 314 108		1	SENKROMENÇ KEÇESİ	OIL SEAL
4	K20.00916	1311 304 255		2	PRİZ./3.VİTES FRENLEME	SYNCH.CONE
5	K20.00962	1324 304 006		1	PRİZ./3.VİTES YILDIZ DİŞLİ	GUIDE SLEEVE
6	K20.00111	1297 304 436		3	PRİZ./3.VİT.YIL.DİŞLİ FİŞEĞİ	PRESSURE PIECE
7	K20.00110	0732 040 409		3	PRİZ./3.VİT.YIL.DİŞLİ YAYI	SPRING
8	K20.01785	1311 304 103		1	PRİZ./3.VİTES SENK.HALKA	ENGAGING SLEEVE

SYNCHRONIZER KIT Const./3rd

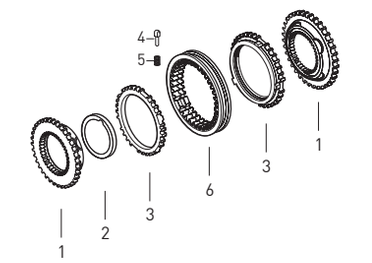

Fig.	Kacmaz No.	Oem No	Oem Old No	Pcs.	Ürün Tanımı	Description
	K20.01884	2001884		Kit	PRİZ./3.VİT.SENK.TAKIMI	SYNCH.KIT Const./3rd
1	K20.00966	1324 304 011		2	PRİZ./3.VİT.SENKROMENÇ	ENGAGING RING
2	K20.01041	0501 314 108		1	SENKROMENÇ KEÇESİ	OIL SEAL
3	K20.00916	1311 304 255		2	PRİZ./3.VİTES FRENLEME	SYNCH.CONE
4	K20.00111	1297 304 436		3	PRİZ./3.VİT.YIL.DİŞLİ FİŞEĞİ	PRESSURE PIECE
5	K20.00110	0732 040 409		3	PRİZ./3.VİT.YIL.DİŞLİ YAYI	SPRING
6	K20.01785	1311 304 103		1	PRİZ./3.VİTES SENK.HALKA	ENGAGING SLEEVE

SYNCHRONIZER KIT 1st/2nd

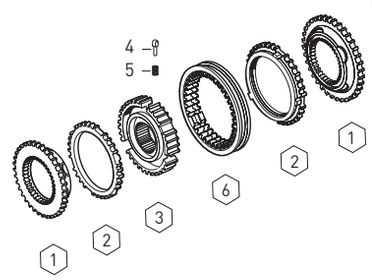

Fig.	Kacmaz No.	Oem No	Oem Old No	Pcs.	Ürün Tanımı	Description
	K20.01885	1324 298 003		Kit	1./2.VİT.SENKROMENÇ KİT	SYNCH.KIT 1st/2nd
1	K20.00965	1324 304 013		2	1./2.VİT.SENKROMENÇ	ENGAGING RING
2	K20.00781	1268 304 594		2	1./2.VİT.SENK.FRENLEME	SYNCH.CONE
3	K20.00297	1324 304 052	(1304 304 591)	1	1./2.VİT.YILDIZ DİŞLİ	GUIDE SLEEVE
4	K20.00111	1297 304 436		3	1./2.VİT.YILDIZ DİŞLİ FİŞEĞİ	PRESSURE PIECE
5	K20.00110	0732 040 409		3	1./2.VİT.YILDIZ DİŞLİ YAYI	SPRING
6	K20.00255	1324 304 053	(1304 304 597)	1	1./2.VİT.SENK.HALKA	ENGAGING SLEEVE

SYNCHRONIZER KIT 1st/2nd

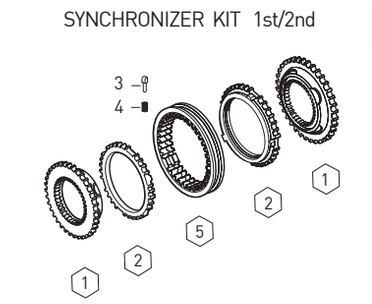

Fig.	Kacmaz No.	Oem No	Oem Old No	Pcs.	Ürün Tanımı	Description
	K20.01886	2001886		Kit	1./2.VİT.SENKROMENÇ KİT	SYNCH.KIT 1st/2nd
1	K20.00965	1324 304 013		2	1./2.VİT.SENKROMENÇ	ENGAGING RING
2	K20.00781	1268 304 594		2	1./2.VİT.SENK.FRENLEME	SYNCH.CONE
3	K20.00111	1297 304 436		3	1./2.VİT.YILDIZ DİŞLİ FİŞEĞİ	PRESSURE PIECE
4	K20.00110	0732 040 409		3	1./2.VİT.YILDIZ DİŞLİ YAYI	SPRING
5	K20.00255	1324 304 053	(1304 304 597)	1	1./2.VİT.SENK.HALKA	ENGAGING SLEEVE

SYNCHRONIZER KIT 1st/2nd

Fig.	Kacmaz No.	Oem No	Oem Old No	Pcs.	Ürün Tanımı	Description
	K20.01885	1324 298 003		Kit	1./2.VİT.SENKROMENÇ KİT	SYNCH.KIT 1st/2nd
1	K20.00781	1268 304 594		2	1./2.VİT.SENK.FRENLEME	SYNCH.CONE
2	K20.00297	1324 304 052	(1304 304 591)	1	1./2.VİT.YILDIZ DİŞLİ	GUIDE SLEEVE
3	K20.00111	1297 304 436		3	1./2.VİT.YILDIZ DİŞLİ FİŞEĞİ	PRESSURE PIECE
4	K20.00110	0732 040 409		3	1./2.VİT.YILDIZ DİŞLİ YAYI	SPRING
5	K20.00255	1324 304 053	(1304 304 597)	1	1./2.VİT.SENK.HALKA	ENGAGING SLEEVE

GEARBOX GASKET KIT

Fig.	Kacmaz No.	Oem No	Oem Old No	Pcs.	Ürün Tanımı	Description
	K20.01999	2001999		Kit	ŞANZ.CONTA TAKIMI KEÇESİZ	GASKET KIT W/SEAL
	K20.02000	2002000		Kit	ŞANZ.CONTA TAKIMI KEÇELİ	GASKET KIT W/OUT SEAL

Original parts names, oem numbers, symbols and descriptions used in this catalogue are for reference purposes only.

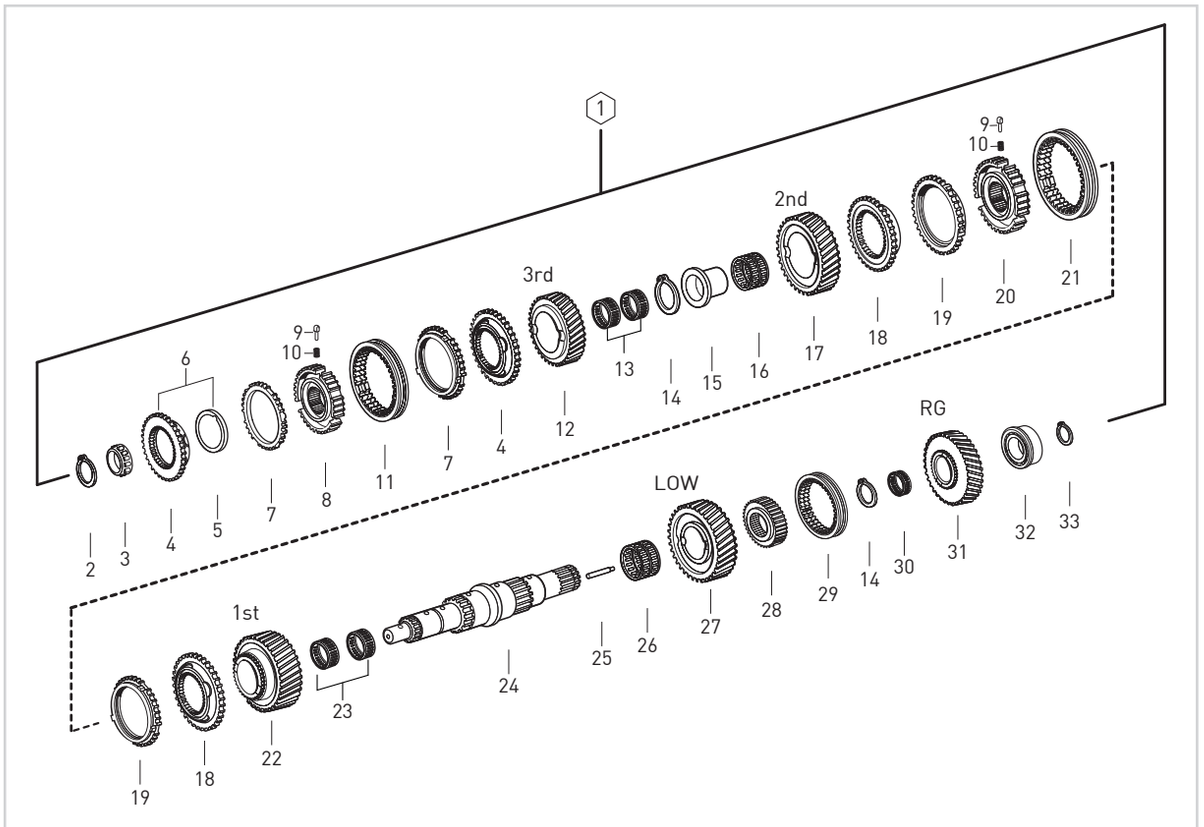

Fig	Kacmaz No.	Oem No	Oem Old No	Pcs.	Ürün Tanımı	Description	Sizes
1	K20.00997	2000997		kit	KAMALI MİL KOMPLE	MAIN SHAFT COMPLETE	
2		0630 501 157		1	KAMALI MİL UÇ BİLYA SEKMANI	RETAINING RING	42x2.00mm
3	K20.01109	0750 117 232		1	KAMALI MİL UÇ BİLYA	ROLLER BEARING	42x40.39mm
4	K20.00966	1324 304 011		2	PRİZ.VE 3.VİT.KİLİT SENKROMENÇ	ENGAGING RING	
5	K20.01041	0501 314 108		1	SENKROMENÇ KEÇESİ	OIL SEAL	
6	K20.00975	1324 204 009		1	PRİZ.VE 3.VİT.SENKROMENÇ KEÇELİ	ENGAGING RING	
7	K20.00916	1311 304 255		2	PRİZ. VE 3.VİTES SENK.FRENLEME	SYNCHRONIZING CONE	
8	K20.00962	1324 304 006		1	PRİZ.VE 3.VİT.YILDIZ DİŞLİ	GUIDE SLEEVE	
9	K20.00111	1297 304 436		6	3.VİTES YILDIZ DİŞLİ FİŞEĞİ	PRESSURE PIECE	
10	K20.00110	0732 040 409		6	3.VİTES YILDIZ DİŞLİ FİŞEK YAYI	SPRING	
11	K20.01785	1311 304 103		1	PRİZ. VE 3.VİTES SENK.HALKA	ENGAGING SLEEVE	
12	K20.00959	1324 304 009	(1324 304 085)	1	3.VİTES DİŞLİSİ 27 DİŞ	GEAR 3rd 27 T	
13	K20.01463	0750 115 969		2	3.VİTES MASURA BİLYA	NEEDLE CAGE	60x68x25mm
14		0630 501 041		2	3./C.VİT. MAS.BİL.ÇANAK SEKMANI	RETAINING RING	60x2.40mm
15	K20.00320	1324 304 070	(1304 304 050)	1	3.VİTES MASURA BİLYA ÇANAĞI	BEARING RACE	
16	K20.01462	0750 115 970	(0750 115 227)	1	2.VİTES MASURA BİLYA	NEEDLE CAGE	75x83x40mm
17	K20.01788	1324 304 015		1	2.VİTES DİŞLİSİ 30 DİŞ	GEAR 2nd 30 T	
18	K20.00965	1324 304 013		2	1./2.VİTES KİLİT SENKROMENÇ	ENGAGING RING	
19	K20.00781	1268 304 594		2	1./2.VİTES SENK.FRENLEME	SYNCHRONIZING CONE	
20	K20.00297	1324 304 052	(1304 304 591)	1	1./2.VİTES YILDIZ DİŞLİ	GUIDE SLEEVE	
21	K20.00255	1324 304 053	(1304 304 597)	1	1./2.VİTES SENK.HALKA	ENGAGING SLEEVE	
22	K20.00977	1324 304 030		1	1.VİTES DİŞLİSİ 33 DİŞ	GEAR 1st 33 T	
23	K20.01307	0750 115 971	(0735 320 816)	2	1.VİTES MASURA BİLYA	NEEDLE CAGE	75x83x23mm
24	K20.00961	1324 304 005		1	KAMALI MİL	MAIN SHAFT	
25	K20.01506	1312 304 150	(1324 304 014)	1	KAMALI MİL YAĞ BORUSU	OIL PIPE	
26	K20.01308	0750 115 972	(0735 320 500)	1	C.VİTES MASURA BİLYA	NEEDLE CAGE	75x83x35mm
27	K20.00309	1304 304 543		1	C VİTES DİŞLİSİ 37 DİŞ	GEAR CRAWLING 37 T	
28	K20.00080	1324 304 037		1	GERİ VİTES YILDIZ DİŞLİ	GUIDE SLEEVE	
29	K20.00311	1304 304 444		1	GERİ VİTES HALKASI	ENGAGING SLEEVE	
30	K20.01309	0750 115 973	(0750 115 225)	1	GERİ VİTES MASURA BİLYA	NEEDLE CAGE	60x68x39mm
31	K20.00462	1324 304 021	(1304 304 553)	1	GERİ VİTES DİŞLİSİ 32 DİŞ	REVERSE GEAR 32 T	
32	K20.01155	0750 117 844		1	KAMALI MİL ARKA BİLYA	ROLLER BEARING	
33		0630 501 116		1	KAMALI MİL ARKA SEKMAN	RETAINING RING	50x2.70mm

Original parts names, oem numbers, symbols and descriptions used in this catalogue are for reference purposes only.

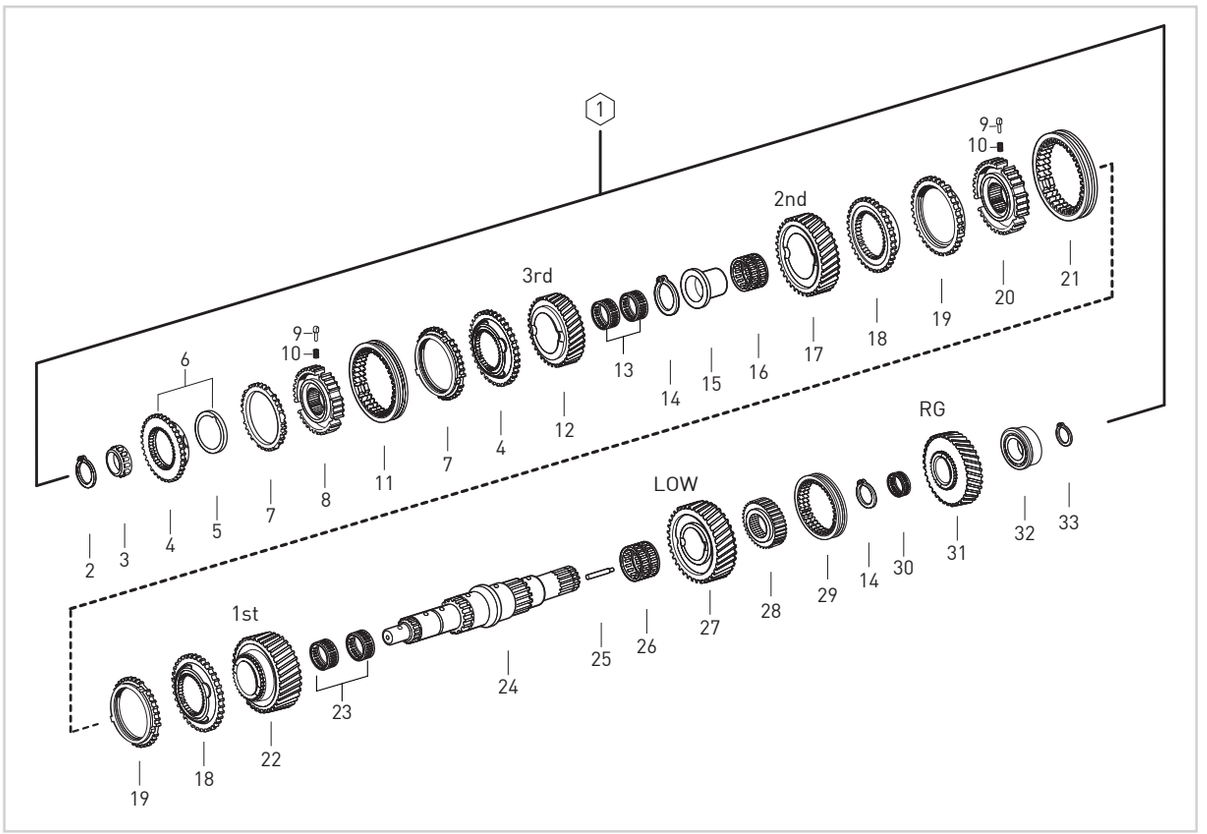

Fig	Kacmaz No.	Oem No	Oem Old No	Pcs.	Ürün Tanımı	Description	Sizes
1	K20.00998	2000998		kit	KAMALI MİL KOMPLE	MAIN SHAFT COMPLETE	
2		0630 501 157		1	KAMALI MİL UÇ BİLYA SEKMANI	RETAINING RING	42x2.00mm
3	K20.01109	0750 117 232		1	KAMALI MİL UÇ BİLYA	ROLLER BEARING	42x40.39mm
4	K20.00966	1324 304 011		2	PRİZ.VE 3.VİT.KİLİT SENKROMENÇ	ENGAGING RING	
5	K20.01041	0501 314 108		1	SENKROMENÇ KEÇESİ	OIL SEAL	
6	K20.00975	1324 204 009		1	PRİZ.VE 3.VİT.SENKROMENÇ KEÇELİ	ENGAGING RING	
7	K20.00916	1311 304 255		2	PRİZ. VE 3.VİTES SENK.FRENLEME	SYNCHRONIZING CONE	
8	K20.00962	1324 304 006		1	PRİZ.VE 3.VİT.YILDIZ DİŞLİ	GUIDE SLEEVE	
9	K20.00111	1297 304 436		6	3.VİTES YILDIZ DİŞLİ FİŞEĞİ	PRESSURE PIECE	
10	K20.00110	0732 040 409		6	3.VİTES YILDIZ DİŞLİ FİŞEK YAYI	SPRING	
11	K20.01785	1311 304 103		1	PRİZ. VE 3.VİTES SENK.HALKA	ENGAGING SLEEVE	
12	K20.00976	1324 304 003		1	3.VİTES DİŞLİSİ 27 DİŞ	GEAR 3rd 27 T	
13	K20.01463	0750 115 969		2	3.VİTES MASURA BİLYA	NEEDLE CAGE	60x68x25mm
14		0630 501 041		2	3./C.VİT. MAS.BİL.ÇANAK SEKMANI	RETAINING RING	60x2.40mm
15	K20.00320	1324 304 070	(1304 304 050)	1	3.VİTES MASURA BİLYA ÇANAĞI	BEARING RACE	
16	K20.01462	0750 115 970	(0750 115 227)	1	2.VİTES MASURA BİLYA	NEEDLE CAGE	75x83x40mm
17	K20.01788	1324 304 015		1	2.VİTES DİŞLİSİ 30 DİŞ	GEAR 2nd 30 T	
18	K20.00965	1324 304 013		2	1./2.VİTES KİLİT SENKROMENÇ	ENGAGING RING	
19	K20.00781	1268 304 594		2	1./2.VİTES SENK.FRENLEME	SYNCHRONIZING CONE	
20	K20.00297	1324 304 052	(1304 304 591)	1	1./2.VİTES YILDIZ DİŞLİ	GUIDE SLEEVE	
21	K20.00255	1324 304 053	(1304 304 597)	1	1./2.VİTES SENK.HALKA	ENGAGING SLEEVE	
22	K20.00977	1324 304 030		1	1.VİTES DİŞLİSİ 33 DİŞ	GEAR 1st 33 T	
23	K20.01307	0750 115 971	(0735 320 816)	2	1.VİTES MASURA BİLYA	NEEDLE CAGE	75x83x23mm
24	K20.00961	1324 304 005		1	KAMALI MİL	MAIN SHAFT	
25	K20.01506	1312 304 150	(1324 304 014)	1	KAMALI MİL YAĞ BORUSU	OIL PIPE	
26	K20.01308	0750 115 972	(0735 320 500)	1	C.VİTES MASURA BİLYA	NEEDLE CAGE	75x83x35mm
27	K20.00309	1304 304 543		1	C VİTES DİŞLİSİ 37 DİŞ	GEAR CRAWLING 37 T	
28	K20.00080	1324 304 037		1	GERİ VİTES YILDIZ DİŞLİ	GUIDE SLEEVE	
29	K20.00311	1304 304 444		1	GERİ VİTES HALKASI	ENGAGING SLEEVE	
30	K20.01309	0750 115 973	(0750 115 225)	1	GERİ VİTES MASURA BİLYA	NEEDLE CAGE	60x68x39mm
31	K20.00462	1324 304 021	(1304 304 553)	1	GERİ VİTES DİŞLİSİ 32 DİŞ	REVERSE GEAR 32 T	
32	K20.01155	0750 117 844		1	KAMALI MİL ARKA BİLYA	ROLLER BEARING	
33		0630 501 116		1	KAMALI MİL ARKA SEKMAN	RETAINING RING	50x2.70mm

Original parts names, oem numbers, symbols and descriptions used in this catalogue are for reference purposes only.

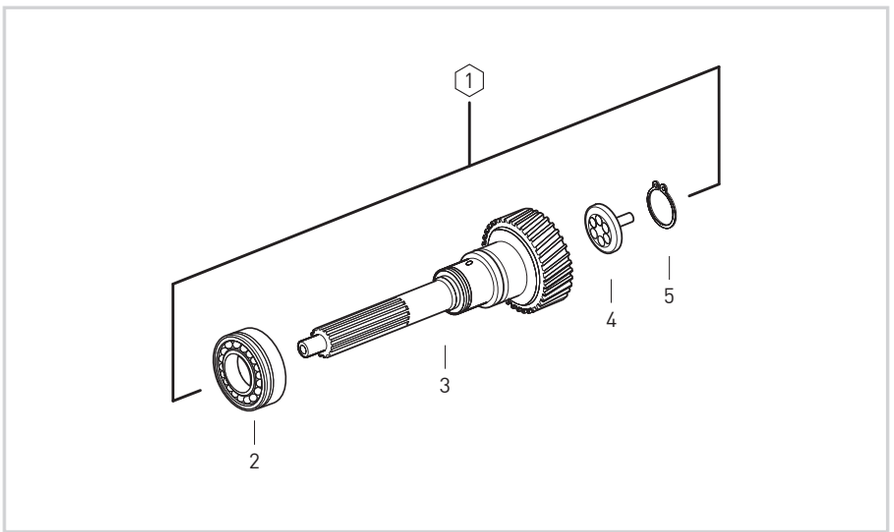

Fig.	Kacmaz No.	Oem No	Oem Old No	Pcs.	Ürün Tanımı	Description	Sizes
1	K20.00999	2000999		kit	PRİZDİREK KOMPLE	INPUT SHAFT COMPLETE	
2	K20.01151	0750 117 518	(0750 120 290)	1	PRİZDİREK ÖN BİLYA	ROLLER BEARING	71.40x120x32.50mm
3	K20.01809	1324 202 033	(1324 302 052)	1	PRİZDİREK 26 DİŞ	INPUT SHAFT 26 T	
4	K20.01501	1304 302 440		1	PRİZDİREK YAĞ PİPETİ	OIL PIPET	58x2.00mm
5	K20.01502	0630 502 063		1	PRİZDİREK YAĞ PİPET SEKMANI	RETAINING RING	

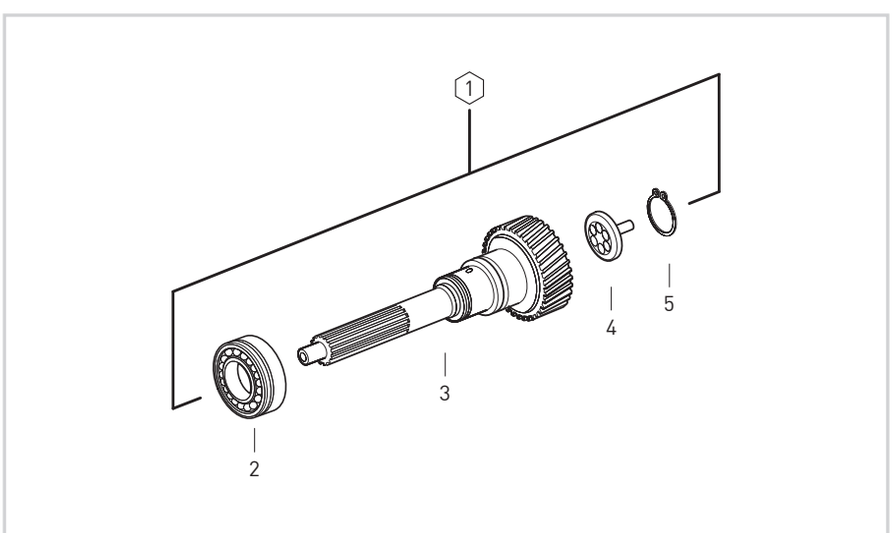

Fig.	Kacmaz No.	Oem No	Oem Old No	Pcs.	Ürün Tanımı	Description	Sizes
1	K20.01000	2001000		kit	PRİZDİREK KOMPLE	INPUT SHAFT COMPLETE	
2	K20.01151	0750 117 518	(0750 120 290)	1	PRİZDİREK ÖN BİLYA	ROLLER BEARING	71.40x120x32.50mm
3	K20.01805	1324 202 018	(1324 302 031)	1	PRİZDİREK 26 DİŞ	INPUT SHAFT 26 T	
4	K20.01501	1304 302 440		1	PRİZDİREK YAĞ PİPETİ	OIL PIPET	58x2.00mm
5	K20.01502	0630 502 063		1	PRİZDİREK YAĞ PİPET SEKMANI	RETAINING RING	

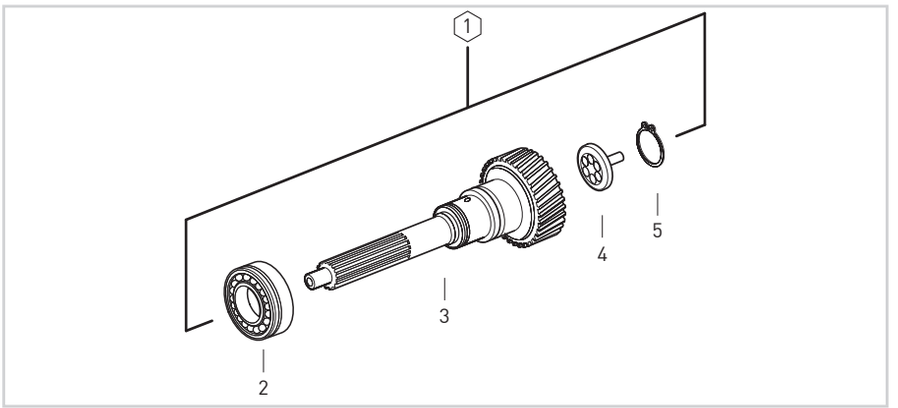

Fig.	Kacmaz No.	Oem No	Oem Old No	Pcs.	Ürün Tanımı	Description	Sizes
1	K20.01045	2001045		kit	PRİZDİREK KOMPLE	INPUT SHAFT COMPLETE	
2	K20.01151	0750 117 518	(0750 120 290)	1	PRİZDİREK ÖN BİLYA	ROLLER BEARING	71.40x120x32.50mm
3	K20.01806	1324 202 036	(1324 302 056)	1	PRİZDİREK 32 DİŞ	INPUT SHAFT 32 T	
4	K20.01501	1304 302 440		1	PRİZDİREK YAĞ PİPETİ	OIL PIPET	58x2.00mm
5	K20.01502	0630 502 063		1	PRİZDİREK YAĞ PİPET SEKMANI	RETAINING RING	

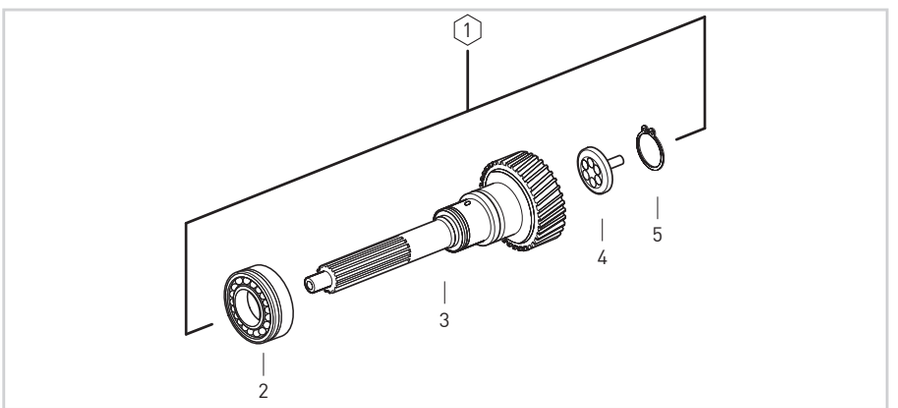

Fig.	Kacmaz No.	Oem No	Oem Old No	Pcs.	Ürün Tanımı	Description	Sizes
1	K20.01046	2001046		kit	PRİZDİREK KOMPLE	INPUT SHAFT COMPLETE	
2	K20.01157	0750 117 799		1	PRİZDİREK ÖN BİLYA	ROLLER BEARING	75x130x27.20mm
3	K20.01949	1324 202 012	(1324 302 015)	1	PRİZDİREK 32 DİŞ	INPUT SHAFT 32 T	
4	K20.01501	1304 302 440		1	PRİZDİREK YAĞ PİPETİ	OIL PIPET	
5	K20.01502	0630 502 063		1	PRİZDİREK YAĞ PİPET SEKMANI	RETAINING RING	58x2.00mm

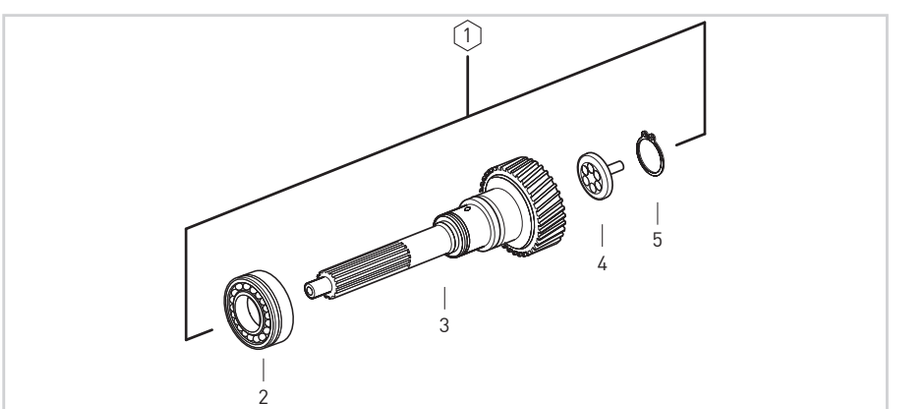

Fig.	Kacmaz No.	Oem No	Oem Old No	Pcs.	Ürün Tanımı	Description	Sizes
1	K20.01047	2001047		kit	PRİZDİREK KOMPLE	INPUT SHAFT COMPLETE	
2	K20.01157	0750 117 799		1	PRİZDİREK ÖN BİLYA	ROLLER BEARING	75x130x27.20mm
3	K20.01819	1324 202 004	(1324 302 004)	1	PRİZDİREK 32 DİŞ	INPUT SHAFT 32 T	
4	K20.01501	1304 302 440		1	PRİZDİREK YAĞ PİPETİ	OIL PIPET	
5	K20.01502	0630 502 063		1	PRİZDİREK YAĞ PİPET SEKMANI	RETAINING RING	58x2.00mm

Original parts names, oem numbers, symbols and descriptions used in this catalogue are for reference purposes only.

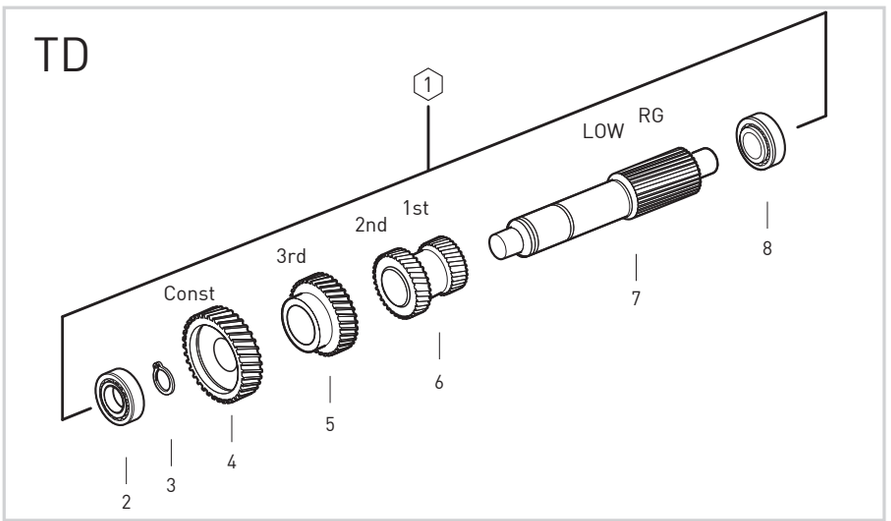

Fig.	Kacmaz No.	Oem No	Oem Old No	Pcs.	Ürün Tanımı	Description	Sizes
1	K20.01048	2001048		kit	GRUP MİLİ KOMPLE	COUNTER SHAFT COMPLETE	
2	K20.01154	0735 371 096	(0750 117 881)	1	GRUP MİLİ ÖN BİLYA	ROLLER BEARING	40x85x33mm
3		0630 501 040		1	GRUP MİLİ ÖN BİLYA SEKMANI	RETAINING RING	58x2.00 mm
4	K20.01790	1324 303 007		1	PRİZDİREK KARŞILIĞI 36 DİŞ	CONSTANT GEAR 36 T	
5	K20.00964	1324 303 018		1	3.VİTES DİŞLİ KARŞILIĞI 28 DİŞ	GEAR 3rd 28 T	
6	K20.00963	1324 303 017	(1324 303 015)	1	1./2.VİTES DİŞLİ KARŞ. 18/23 DİŞ	DOUBLE GEAR 1st/2nd 18/23 T	
7	K20.00960	1324 303 001		1	GRUP MİLİ 14 DİŞ	COUNTER SHAFT 14 T	
8	K20.01123	0750 117 083	(0750 120 291)	1	GRUP MİLİ ARKA BİLYA	ROLLER BEARING	50.80x95.20x27.70mm

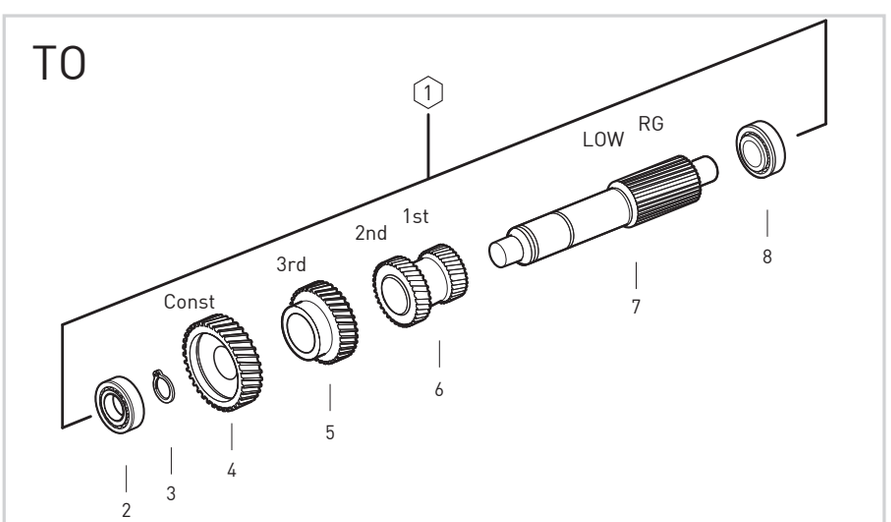

Fig.	Kacmaz No.	Oem No	Oem Old No	Pcs.	Ürün Tanımı	Description	Sizes
1	K20.01049	2001049		kit	GRUP MİLİ KOMPLE	COUNTER SHAFT COMPLETE	
2	K20.01154	0735 371 096	(0750 117 881)	1	GRUP MİLİ ÖN BİLYA	ROLLER BEARING	40x85x33mm
3		0630 501 040		1	GRUP MİLİ ÖN BİLYA SEKMANI	RETAINING RING	58x2.00 mm
4	K20.01795	1324 303 004		1	PRİZDİREK KARŞILIĞI 33 DİŞ	CONSTANT GEAR 33 T	
5	K20.00972	1324 303 003		1	3.VİTES DİŞLİ KARŞILIĞI 37 DİŞ	GEAR 3rd 37 T	
6	K20.00963	1324 303 017	(1324 303 015)	1	1./2.VİTES DİŞLİ KARŞ. 18/23 DİŞ	DOUBLE GEAR 1st/2nd 18/23 T	
7	K20.00960	1324 303 001		1	GRUP MİLİ 14 DİŞ	COUNTER SHAFT 14 T	
8	K20.01123	0750 117 083	(0750 120 291)	1	GRUP MİLİ ARKA BİLYA	ROLLER BEARING	50.80x95.20x27.70mm

Original parts names, oem numbers, symbols and descriptions used in this catalogue are for reference purposes only.

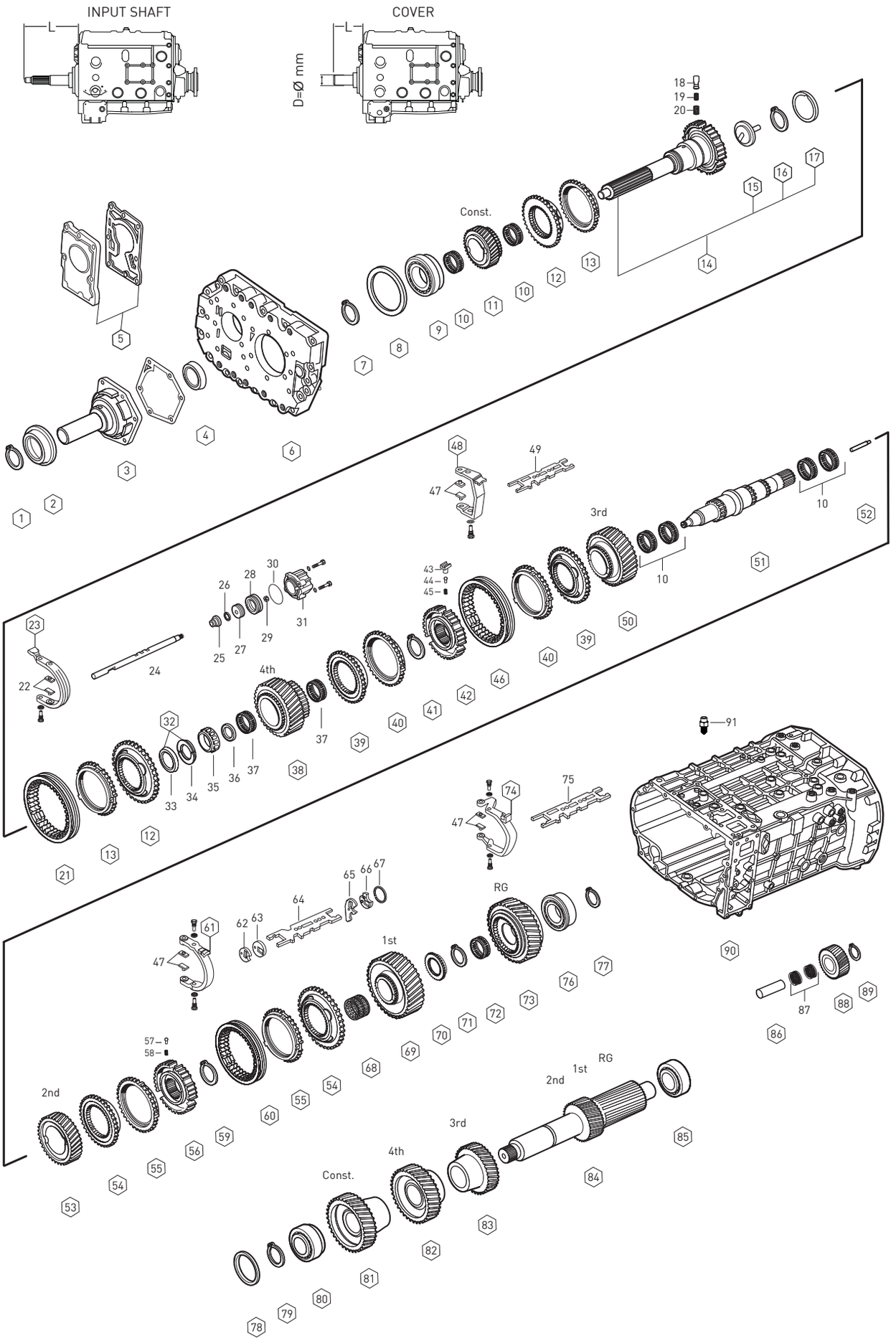

Original parts names, oem numbers, symbols and descriptions used in this catalogue are for reference purposes only.

Fig.	Kacmaz No.	Oem No	Oem Old No	Pcs.	Ürün Tanımı	Description	Sizes	Notes	DG 13.31-1.00	DG 13.30-1.00	SG 13.53-0.82
1		0630 501 051		1	PRİZ.KEÇE KAPAK SEGMANI	RETANING RING	471/82X2.5mm		◆	◆	◆
2		1304 302 232		1	PRİZ.KEÇE KAPAK EMN.SACI	SEALING CAP			◆	◆	◆
3	K20.00571	1304 302 316	(1304 302 213)	1	PRİZDİREK KEÇE KAPAĞI	COVER	L=170 D=57	(B) (I) (R)	◆	◆	◆
3	K20.00572	1304 302 319	(1304 302 216)	1	PRİZDİREK KEÇE KAPAĞI	COVER	L=190 D=57	(F)	◆	◆	◆
3	K20.00573	1304 302 444		1	PRİZDİREK KEÇE KAPAĞI	COVER	L=147 D=57	(M) (H) (D)	◆	◆	◆
4	K20.01001	0750 111 149	(0734 310 161)	1	PRİZDİREK ÖN KEÇE	OIL SEAL	48X65X10mm		◆	◆	◆
5	K20.00558	0501 004 549	(1304 203 008)	1	ŞANZIMAN YAĞ POMPASI	OIL PUMP			◆	◆	◆
6	K20.00574	1304 301 331	(1304 301 413)	1	ŞANZIMAN ÖN GÖVDE	HOUSING			◆	◆	◆
			(1304 301 198)								
7	K20.02192	0730 501 360		1	PRİZ.ÖN BİLYA SEGMANI	RETAINING RING	4.00mm		◆	◆	◆
7	K20.02191	0730 501 358		1	PRİZ.ÖN BİLYA SEGMANI	RETAINING RING	3.90mm		◆	◆	◆
7	K20.02190	0730 501 356		1	PRİZ.ÖN BİLYA SEGMANI	RETAINING RING	3.80mm		◆	◆	◆
7	K20.02199	0730 501 354		1	PRİZ.ÖN BİLYA SEGMANI	RETAINING RING	3.70mm		◆	◆	◆
8	K20.01595	0730 004 808		1	PRİZ.ÖN BİLYA RAYNELİ	SHIM	2.40mm		◆	◆	◆
8	K20.01596	0730 004 805		1	PRİZ.ÖN BİLYA RAYNELİ	SHIM	2.25mm		◆	◆	◆
8	K20.01597	0730 004 800		1	PRİZ.ÖN BİLYA RAYNELİ	SHIM	2.00mm		◆	◆	◆
8	K20.01598	0730 005 646		1	PRİZ.ÖN BİLYA RAYNELİ	SHIM	1.95mm		◆	◆	◆
8	K20.01599	2001599		1	PRİZ.ÖN BİLYA RAYNELİ	SHIM	0.30mm		◆	◆	◆
8	K20.01600	2001600		1	PRİZ.ÖN BİLYA RAYNELİ	SHIM	0.20mm		◆	◆	◆
8	K20.01601	2001601		1	PRİZ.ÖN BİLYA RAYNELİ	SHIM	0.10mm		◆	◆	◆
9	K20.01101	0750 117 079	(0735 370 233)	1	PRİZDİREK ÖN BİLYA	ROLLER BEARING	66.6X117.4X30.1mm		◆	◆	◆
10	K20.01307	0735 320 816	(0750 115 971)	6	TAK.-3./2. VİT.MASURA BİLYA	NEEDLE CAGE	75X83X23mm		◆	◆	◆
11	K20.00232	1304 302 169	(1304 302 137)	1	TAKVİYE DİŞLİSİ 26 DİŞ	CONSTANT GEAR 26 T			◆	◆	
11	K20.00233	1304 302 150		1	TAKVİYE DİŞLİSİ 30 DİŞ	CONSTANT GEAR 30 T					◆
12	K20.00234	1304 302 188	(1304 302 006)	2	TAKVİYE SENKROMENÇ	ENGAGING RING			◆	◆	◆
13	K20.00259	1304 304 680	(1304 304 496)	2	TAKVİYE SENK.FRENLEME	SYNCHRONIZING CONE			◆	◆	◆
14	K20.00224	1304 202 201	(1304 202 259)	1	PRİZDİREK	INPUT SHAFT	L=260 SAE10C 1 3/4	(M) (H) (D)	◆	◆	◆
			(1304 302 403)								
14	K20.00225	1304 202 202	(1304 202 260)	1	PRİZDİREK	INPUT SHAFT	L=286 SAE10C 1 3/4	(B) (I)	◆	◆	◆
			(1304 302 404)								
14	K20.00226	1304 202 203	(1304 302 405)	1	PRİZDİREK	INPUT SHAFT	L=310 SAE10C 1 3/4	(F)	◆	◆	◆
14	K20.00330	1304 202 255	(1304 202 264)	1	PRİZDİREK	INPUT SHAFT	L=305 SAE10C 1 3/4	(F)	◆	◆	◆
			(1304 302 494)								
15	K20.01501	1304 302 440		1	PRİZDİREK YAĞ PİPETİ	OIL PIPET			◆	◆	◆
16	K20.01502	0630 502 063		1	PRİZDİREK SEGMANI	RETANING RING	472/58X2mm		◆	◆	◆
17	K20.01010	0501 311 146		1	PRİZDİREK ARKA KEÇE	OIL SEAL			◆	◆	◆
18	K20.00471	1240 304 278		3	PRİZDİREK FİŞEĞİ	PRESSURE PIECE			◆	◆	◆
19	K20.00470	0732 040 386		3	PRİZDİREK YAYI	SPRING			◆	◆	◆
20	K20.00469	0732 040 385		3	PRİZDİREK YAYI	SPRING			◆	◆	◆
21	K20.00244	1240 304 272	(1240 304 205)	1	TAKVİYE SENK.HALKA	ENGAGING SLEEVE			◆	◆	◆
22	K20.01058	1268 312 057		2	TAKVİYE HİLAL PABUCU	SLIDING PAD			◆	◆	◆

NOTES :

ABCD alfabetic letters are used in conjunction with the encoded parts.
Alphabetical Coding has been done according to Input Shaft

NOTLAR :

ABCD alfabetik harfler ile kodlananparçalar birlikte kullanılır.
Alfabetik kodlamalar prizdireklere göre yapılmıştır.

Original parts names, oem numbers, symbols and descriptions used in this catalogue are for reference purposes only.

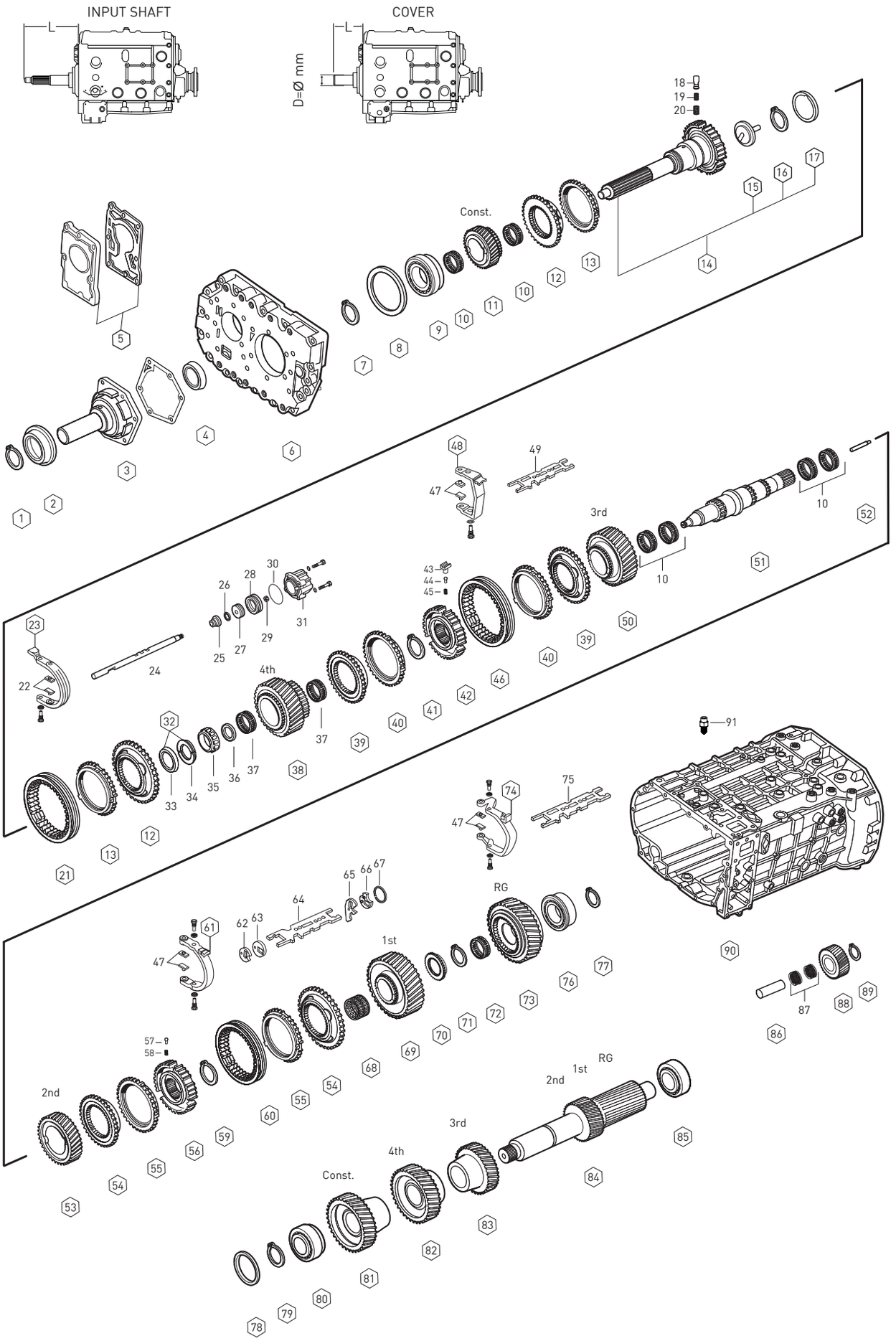

Original parts names, oem numbers, symbols and descriptions used in this catalogue are for reference purposes only.

Fig.	Kacmaz No.	Oem No	Oem Old No	Pcs.	Ürün Tanımı	Description	Sizes	Notes	DG 13.30-1.00	DG 13.31-1.00	SG 13.53-0.82
23		1304 312 003		1	TAKVİYE HİLALİ	G.SHIFT FORK			◆	◆	◆
24		1304 312 005		1	TAKVİYE HİLAL MİLİ	G.SHIFT RAIL			◆	◆	◆
25	K20.01017	0750 112 047		1	TAKVİYE HİLAL MİL KEÇESİ	FLANGE PACKING	22.0X36.0X14.5mm		◆	◆	◆
26	K20.01627	0730 107 545		1	TAK.HİLAL MİL KEÇE PULU	WASHER	2.70mm		◆	◆	◆
26	K20.01628	0730 107 544		1	TAK.HİLAL MİL KEÇE PULU	WASHER	2.40mm		◆	◆	◆
26	K20.01629	0730 107 543		1	TAK.HİLAL MİL KEÇE PULU	WASHER	2.10mm		◆	◆	◆
26	K20.01630	0730 107 542		1	TAK.HİLAL MİL KEÇE PULU	WASHER	1.80mm		◆	◆	◆
26	K20.01631	0730 107 541		1	TAK.HİLAL MİL KEÇE PULU	WASHER	1.50mm		◆	◆	◆
27		1296 312 053	(1296 312 047)	1	TAKVİYE HİLAL MİL PİSTONU	PISTON			◆	◆	◆
28	K20.01021	0750 112 089		1	TAKVİYE HAVA KEÇESİ	DOUBLE PACKING	53.0X63.0X16.2mm		◆	◆	◆
29	K20.01774	0737 006 095		1	TAKVİYE HİLAL MİL SOMUNU	NUT	M16X1.5mm		◆	◆	◆
30		0634 313 216		1	TAKVİYE SİLİNDİR ORİNGİ	O-RING	82.0X2.5mm		◆	◆	◆
31		1304 334 038		1	TAKVİYE SİLİNDİR GÖVDESİ	CYLINDER			◆	◆	◆
32	K20.01534	1499 298 159		1	EMN.SACI VE K.MİL KİLİT TK.	SPLIT RING KIT	4.00mm		◆	◆	◆
32	K20.01536	1499 298 158		1	EMN.SACI VE K.MİL KİLİT TK.	SPLIT RING KIT	3.90mm		◆	◆	◆
32	K20.01538	1499 298 157		1	EMN.SACI VE K.MİL KİLİT TK.	SPLIT RING KIT	3.80mm		◆	◆	◆
32	K20.01587	1499 298 156		1	EMN.SACI VE K.MİL KİLİT TK.	SPLIT RING KIT	3.70mm		◆	◆	◆
32	K20.01632	1499 298 154		1	EMN.SACI VE K.MİL KİLİT TK.	SPLIT RING KIT	3.60mm		◆	◆	◆
32	K20.01634	1499 298 152		1	EMN.SACI VE K.MİL KİLİT TK.	SPLIT RING KIT	3.50mm		◆	◆	◆
32	K20.01636	1499 298 150		1	EMN.SACI VE K.MİL KİLİT TK.	SPLIT RING KIT	3.40mm		◆	◆	◆
33	K20.01540	0730 063 154		1	KAMALI MİL EMNİYET SACI	RETAINING RING			◆	◆	◆
34	K20.01535	6085 201 057		2	PARÇALI KİLİT	SPLIT RING	4.00mm		◆	◆	◆
34	K20.01537	6085 201 056		2	PARÇALI KİLİT	SPLIT RING	3.90mm		◆	◆	◆
34	K20.01539	6085 201 055		2	PARÇALI KİLİT	SPLIT RING	3.80mm		◆	◆	◆
34	K20.01586	6085 201 054		2	PARÇALI KİLİT	SPLIT RING	3.70mm		◆	◆	◆
34	K20.01633	6085 201 052		2	PARÇALI KİLİT	SPLIT RING	3.60mm		◆	◆	◆
34	K20.01635	6085 201 050		2	PARÇALI KİLİT	SPLIT RING	3.50mm		◆	◆	◆
34	K20.01637	6085 201 048		2	PARÇALI KİLİT	SPLIT RING	3.40mm		◆	◆	◆
35	K20.01106	0735 371 406		1	KAMALI MİL UÇ BİLYA	ROLLER BEARING	32X33mm		◆	◆	◆
36	K20.01517	0501 314 139		1	KAMALI MİL UÇ BİL.PULU	THRUST WASHER			◆	◆	◆
37	K20.01301	0750 115 223	(0750 115 299)	2	4.VİTES DİŞ.MAS.BİLYA	NEEDLE CAGE	59.5X81.5X22mm		◆	◆	◆
38	K20.00245	1304 304 516		1	4.VİTES DİŞLİSİ 27 DİŞ	GEAR 4th 27 T			◆	◆	
38	K20.00246	1304 304 518		1	4.VİTES DİŞLİSİ 27 DİŞ	GEAR 4th 27 T					◆
39	K20.00247	1304 304 012		2	3./ 4.VİT.SENKROMENÇ	ENGAGING RING			◆	◆	◆
40	K20.00260	1304 304 683	(1304 304 014)	2	3./ 4.VİT.SENK.FRENLEME	SYNCHRONIZING CONE			◆	◆	◆
41		0730 501 239		1	3./ 4.VİT.YILDIZ DİŞLİ SEGM.	RETAINING RING	65X2,70mm		◆	◆	◆
41		0750 501 237		1	3./ 4.VİT.YILDIZ DİŞLİ SEGM.	RETAINING RING	65X2,60mm		◆	◆	◆
41		0630 501 044		1	3./ 4.VİT.YILDIZ DİŞLİ SEGM.	RETAINING RING	65X2,50mm		◆	◆	◆
41		0730 501 233		1	3./ 4.VİT.YILDIZ DİŞLİ SEGM.	RETAINING RING	65X2,40mm		◆	◆	◆
41		0730 501 577		1	3./ 4.VİT.YILDIZ DİŞLİ SEGM.	RETAINING RING	65X2,30mm		◆	◆	◆
41		0630 501 154		1	3./ 4.VİT.YILDIZ DİŞLİ SEGM.	RETAINING RING	65X2,20mm		◆	◆	◆

NOTES :

ABCD alfabetic letters are used in conjunction with the encoded parts.
Alphabetical Coding has been done according to Input Shaft

NOTLAR :

ABCD alfabetik harfler ile kodlananparçalar birlikte kullanılır.
Alfabetik kodlamalar prizdireklere göre yapılmıştır.

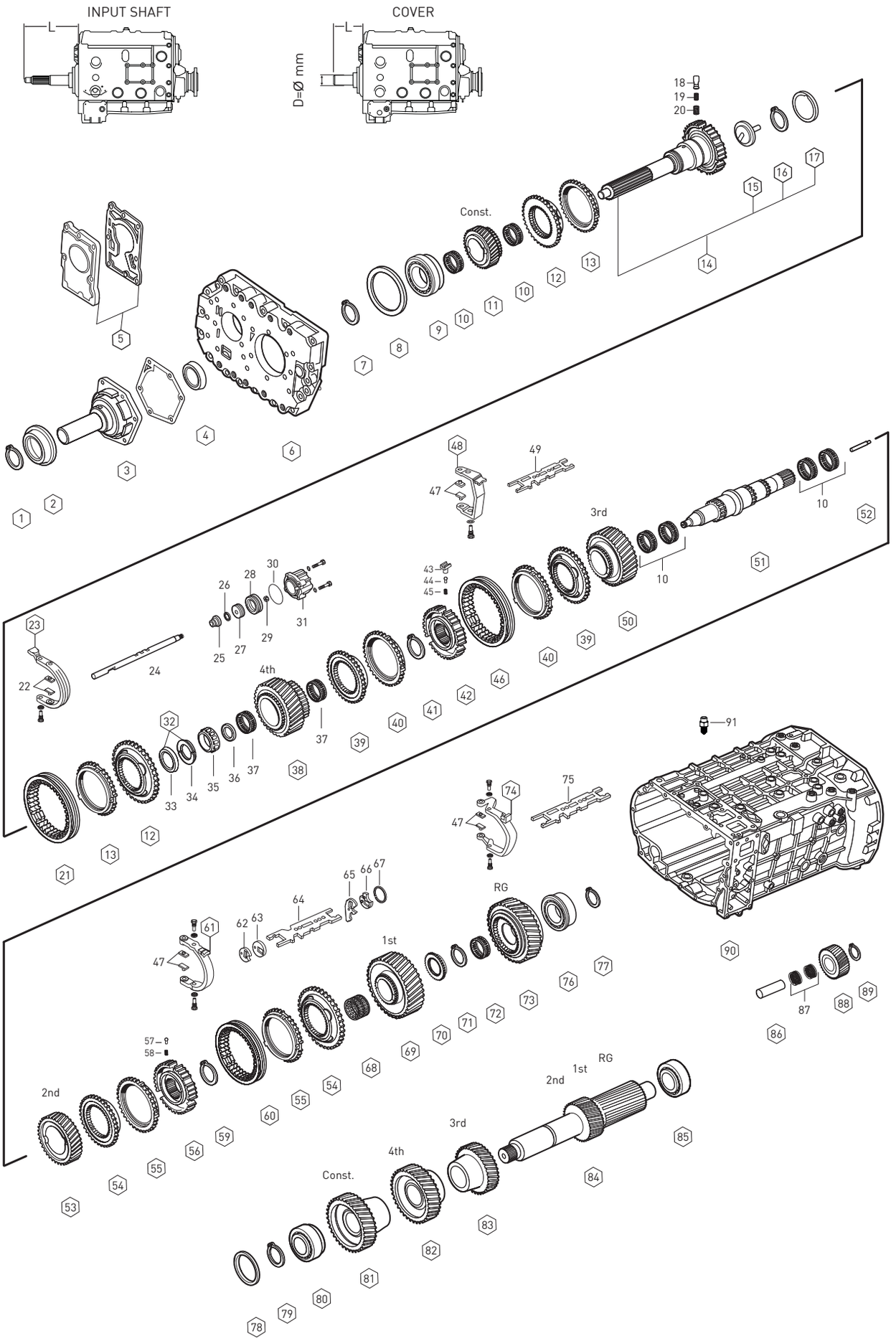

Original parts names, oem numbers, symbols and descriptions used in this catalogue are for reference purposes only.

Fig.	Kacmaz No.	Oem No	Oem Old No	Pcs.	Ürün Tanımı	Description	Sizes	Notes	DG 13.30-1.00	DG 13.31-1.00	SG 13.53-0.82
41		0630 501 155		1	3./ 4.VİT.YILDIZ DİŞLİ SEGM.	RETAINING RING	65X2.10mm		◆	◆	◆
41		0630 531 079		1	3./ 4.VİT.YILDIZ DİŞLİ SEGM.	RETAINING RING	65X2.00mm		◆	◆	◆
42	K20.00252	1304 304 515		1	3./4.VİTES YILDIZ DİŞLİ	GUIDE SLEEVE			◆	◆	◆
43	K20.00468	1238 304 394		3	3./ 4.VİT.YILDIZ DİŞ.FİŞEĞİ	PRESSURE PIECE			◆	◆	◆
44	K20.00467	1249 304 222		3	3./ 4..VİT.YILDIZ DİŞ.PİMİ	PIN			◆	◆	◆
45	K20.00110	0732 040 409		3	3./ 4..VİT.YILDIZ DİŞ.YAYI	SPRING			◆	◆	◆
46	K20.00253	1304 304 688	(6002 305 511)	1	3./ 4.VİT.SENK.HALKA	ENGAGING SLEEVE			◆	◆	◆
47	K20.00169	1290 306 066		6	1./2./3./4./R VİT.HİLAL PABUCU	SLIDING PAD			◆	◆	◆
48		1304 306 010		1	3./4.VİTES HİLALİ	GEAR SHIT FORK 3rd/4th			◆	◆	◆
49		1304 306 054		1	3./4.VİTES HİLAL ÇITASI	GEAR SHIFT RAIL 3rd/4th			◆	◆	◆
50	K20.00248	1304 304 475		1	3.VİTES DİŞLİSİ 29 DİŞ	GEAR 3rd 29 T			◆	◆	
50	K20.00249	1304 304 417		1	3.VİTES DİŞLİSİ 32 DİŞ	GEAR 3rd 32 T					◆
51	K20.00331	1304 304 630		1	KAMALI MİL	MAIN SHAFT			◆	◆	◆
52	K20.01506	1324 304 014	(1312 304 150)	1	KAMALI MİL YAĞ BORUSU	OIL PIPE			◆	◆	◆
53	K20.00250	1304 304 497	(1304 304 420)	1	2.VİTES DİŞLİSİ 32 DİŞ	GEAR 2nd 32 T			◆	◆	
53	K20.00251	1304 304 422		1	2.VİTES DİŞLİSİ 37 DİŞ	GEAR 2nd 37 T					◆
54	K20.00261	1304 304 408		2	1./ 2.VİT.SENKROMENÇ	ENGAGING RING			◆	◆	◆
55	K20.00262	1304 304 681	(1304 304 542)	2	1./ 2.VİT.SENK.FRENLEME	SYNCHRONIZING CONE			◆	◆	◆
56	K20.00254	1304 304 653	(1304 304 697)	1	1./ 2.VİT.YILDIZ DİŞLİ	GUIDE SLEEVE			◆	◆	◆
57	K20.00111	1297 304 436		3	1./ 2.VİT.YILDIZ DİŞ.FİŞEĞİ	PRESSURE PIECE			◆	◆	◆
58	K20.00110	0732 040 409		3	1./ 2.VİT.YILDIZ DİŞ.YAYI	SPRING			◆	◆	◆
59		0630 501 071		1	1./ 2.VİT.YILDIZ DİŞLİ SEGM.	RETAINING RING	70X2.70mm		◆	◆	◆
59		0630 501 072		1	1./ 2.VİT.YILDIZ DİŞLİ SEGM.	RETAINING RING	70X2.60mm		◆	◆	◆
59		0630 501 046		1	1./ 2.VİT.YILDIZ DİŞLİ SEGM.	RETAINING RING	70X2.50mm		◆	◆	◆
60	K20.00255	1324 304 053	(1304 304 597)	1	1./ 2.VİT.SENK.HALKA	ENGAGING SLEEVE			◆	◆	◆
			(1304 304 541)								
61		1304 306 009		1	1./2.VİTES HİLALİ	GEAR SHIFT FORK 1st/2nd			◆	◆	◆
62		1304 306 022		1	VİTES HİLAL ÇITA KİTLEMESİ	LEVER			◆	◆	◆
63		1304 306 089		1	VİTES HİLAL ÇITA KİTLEMESİ	LEVER			◆	◆	◆
64		1304 306 055		1	1./2.VİTES HİLAL ÇITASI	GEAR SHIFT RAIL 1st/2nd			◆	◆	◆
65		1304 306 140		1	VİTES HİLAL ÇITA KİTLEMESİ	LEVER			◆	◆	◆
66		1304 306 090		1	VİTES HİLAL ÇITA KİTLEMESİ	LEVER			◆	◆	◆
67		0730 300 430	(0730 009 856)	1	VİTES HİLAL ÇITA SEGMANI	RETAINING RING			◆	◆	◆
68	K20.01310	0750 115 224		1	1.VİTES MASURA BİLYA	NEEDLE CAGE	70X78X50mm		◆	◆	◆
69	K20.00333	1304 304 549		1	1.VİTES DİŞLİSİ 37 DİŞ	GEAR 1st 37 T			◆		
69	K20.00332	1304 304 358		1	1.VİTES DİŞLİSİ 37 DİŞ	GEAR 1st 37 T				◆	
69	K20.00334	1304 304 376		1	1.VİTES DİŞLİSİ 38 DİŞ	GEAR 1st 38 T					◆
70	K20.00263	1304 304 007		1	GERİ VİTES YILDIZ DİŞLİ	HUB			◆	◆	◆
71		0630 501 195		1	GERİ VİTES YILDIZ DİŞLİ SEG.	RETAINING RING	60X2.80mm		◆	◆	◆
71		0630 501 194		1	GERİ VİTES YILDIZ DİŞLİ SEG.	RETAINING RING	60X2.70mm		◆	◆	◆
71		0630 501 197		1	GERİ VİTES YILDIZ DİŞLİ SEG.	RETAINING RING	60X2.60mm		◆	◆	◆

NOTES :

ABCD alfabetic letters are used in conjunction with the encoded parts.
Alphabetical Coding has been done according to Input Shaft

NOTLAR :

ABCD alfabetik harfler ile kodlananparçalar birlikte kullanılır.
Alfabetik kodlamalar prizdireklere göre yapılmıştır.

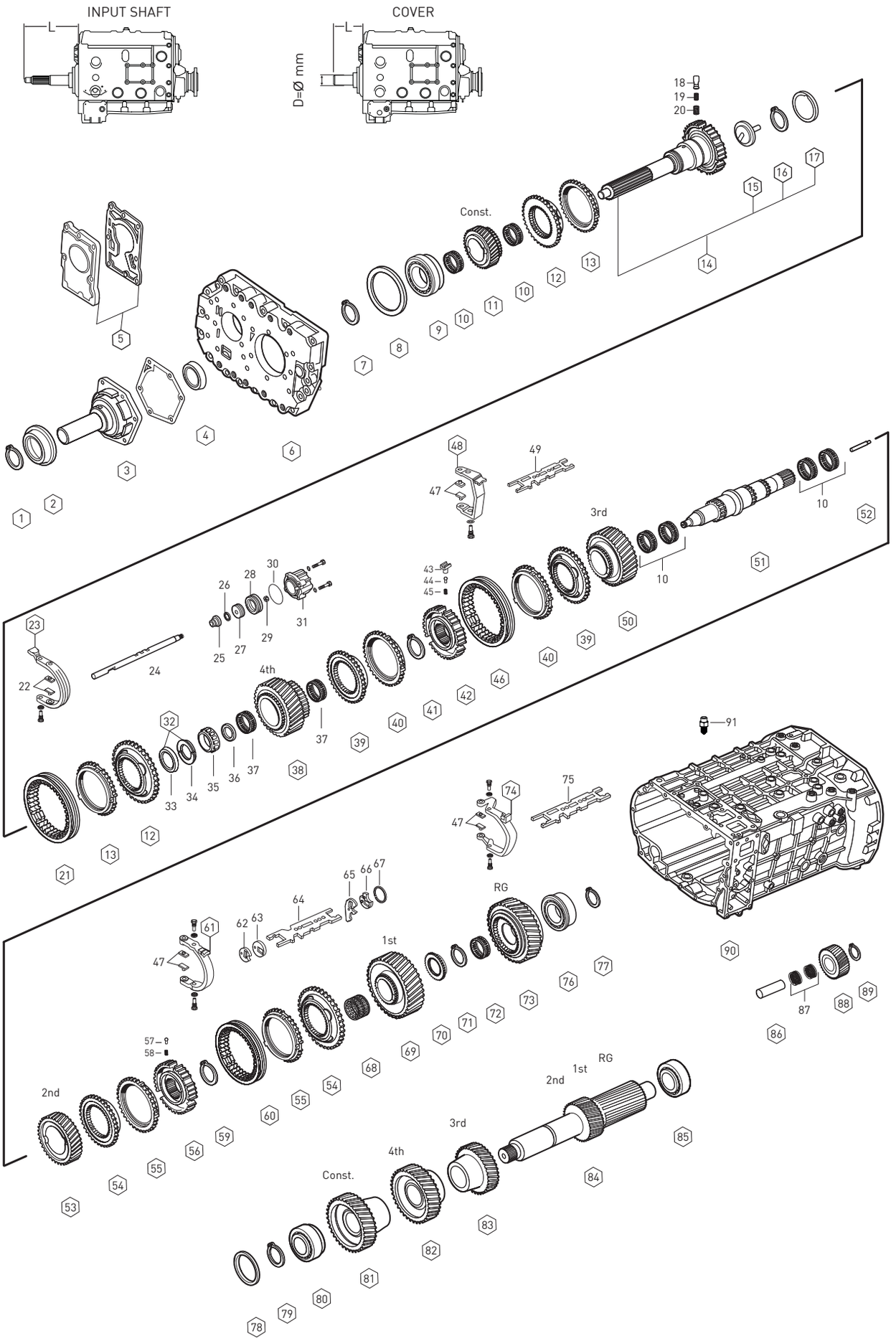

Original parts names, oem numbers, symbols and descriptions used in this catalogue are for reference purposes only.

Fig.	Kacmaz No.	Oem No	Oem Old No	Pcs.	Ürün Tanımı	Description	Sizes	Not	DG 13.30-1.00	DG 13.31-1.00	SG 13.53-0.82
71		0630 531 141		1	GERİ VİTES YILDIZ DİŞLİ SEG.	RETAINING RING	60X2.50mm		◆	◆	◆
71		0630 501 067		1	GERİ VİTES YILDIZ DİŞLİ SEG.	RETAINING RING	60x2.40mm		◆	◆	◆
72	K20.01309	0750 115 973	(0750 115 225)	1	GERİ VİTES MASURA BİLYA	NEEDLE CAGE	60X68X39mm		◆	◆	◆
73	K20.00336	1304 304 671		1	GERİ VİTES DİŞLİSİ 35 DİŞ	REVERSE GEAR 35 T			◆		
73	K20.00335	1304 304 669		1	GERİ VİTES DİŞLİSİ 32 DİŞ	REVERSE GEAR 32 T				◆	
73	K20.00337	1304 304 670		1	GERİ VİTES DİŞLİSİ 35 DİŞ	REVERSE GEAR 35 T					◆
74		1304 306 011		1	GERİ VİTES HİLALİ	GEAR SHIFT FORK RG			◆	◆	◆
75		1304 306 054		1	GERİ VİTES HİLAL ÇITASI	GEAR SHIFT RAIL RG			◆	◆	◆
76	K20.01113	0735 371 605		1	KAMALI MİL ARKA BİLYA	ROLLER BEARING			◆	◆	◆
77		0730 501 295		1	GÜNEŞ DİŞLİ SEGMANI	RETAINING RING	45X2.80mm		◆	◆	◆
77		0730 501 297		1	GÜNEŞ DİŞLİ SEGMANI	RETAINING RING	45X2.90mm		◆	◆	◆
77		0630 531 058		1	GÜNEŞ DİŞLİ SEGMANI	RETAINING RING	45X3.00mm		◆	◆	◆
77		0730 501 495		1	GÜNEŞ DİŞLİ SEGMANI	RETAINING RING	45X3.10mm		◆	◆	◆
77		0730 501 496		1	GÜNEŞ DİŞLİ SEGMANI	RETAINING RING	45X3.20mm		◆	◆	◆
78	K20.01602	0730 004 796		1	GRUP MİLİ BİLYA RAYNELİ	SHIM	2.90mm		◆	◆	◆
78	K20.01603	0730 004 793		1	GRUP MİLİ BİLYA RAYNELİ	SHIM	2.75mm		◆	◆	◆
78	K20.01604	0730 004 790		1	GRUP MİLİ BİLYA RAYNELİ	SHIM	2.60mm		◆	◆	◆
78	K20.01605	0730 003 414		1	GRUP MİLİ BİLYA RAYNELİ	SHIM	2.05mm		◆	◆	◆
78	K20.01606	0730 001 799		1	GRUP MİLİ BİLYA RAYNELİ	SHIM	2.00mm		◆	◆	◆
78	K20.01607	0730 004 786		1	GRUP MİLİ BİLYA RAYNELİ	SHIM	1.95mm		◆	◆	◆
78	K20.01608	0730 004 785		1	GRUP MİLİ BİLYA RAYNELİ	SHIM	1.90mm		◆	◆	◆
78	K20.01609	2001609		1	GRUP MİLİ BİLYA RAYNELİ	SHIM	0.30mm		◆	◆	◆
78	K20.01610	2001610		1	GRUP MİLİ BİLYA RAYNELİ	SHIM	0.20mm		◆	◆	◆
78	K20.01611	2001611		1	GRUP MİLİ BİLYA RAYNELİ	SHIM	0.10mm		◆	◆	◆
79		0630 531 050		1	GRUP MİLİ ÖN BİLYA SEGM.	RETAINING RING	40X2.50mm		◆	◆	◆
79		0630 531 314		1	GRUP MİLİ ÖN BİLYA SEGM.	RETAINING RING	40X2.40mm		◆	◆	◆
79		0630 531 315		1	GRUP MİLİ ÖN BİLYA SEGM.	RETAINING RING	40X2.30mm		◆	◆	◆
79		0630 531 316		1	GRUP MİLİ ÖN BİLYA SEGM.	RETAINING RING	40X2.20mm		◆	◆	◆
79		0630 531 049		1	GRUP MİLİ ÖN BİLYA SEGM.	RETAINING RING	40X2.00mm		◆	◆	◆
80	K20.01122	0735 371 749	(0750 118 511)	1	GRUP MİLİ ÖN BİLYA	ROLLER BEARING	40X80X32mm		◆	◆	◆
			(0735 370 463)								
			(0635 376 023)								
81	K20.00235	1304 303 273		1	TAKV.DİŞLİ KARŞILIĞI 33 DİŞ	CONSTANT GEAR 33 T			◆	◆	
81	K20.00236	1304 303 283		1	TAKV.DİŞLİ KARŞILIĞI 31 DİŞ	CONSTANT GEAR 31 T					◆
82	K20.00237	1304 303 212		1	4.VİT.DİŞLİ KARŞILIĞI 29 DİŞ	GEAR 4th 29 T			◆	◆	
82	K20.00238	1304 303 175		1	4.VİT.DİŞLİ KARŞILIĞI 34 DİŞ	GEAR 4th 34 T					◆
83	K20.00239	1304 303 214		1	3.VİT.DİŞLİ KARŞILIĞI 22 DİŞ	GEAR 3rd 22 T			◆	◆	
83	K20.00240	1304 303 192		1	3.VİT.DİŞLİ KARŞILIĞI 28 DİŞ	GEAR 3rd 28 T					◆
84	K20.00242	1304 303 276		1	GRUP MİLİ	COUNTER SHAFT			◆		
84	K20.00241	1304 303 277		1	GRUP MİLİ 14/17 DİŞ	COUNTER SHAFT 14/17 T				◆	
84	K20.00243	1304 303 279		1	GRUP MİLİ 16/22 DİŞ	COUNTER SHAFT 16/22 T					◆

NOTES :

ABCD alfabetic letters are used in conjunction with the encoded parts.
Alphabetical Coding has been done according to Input Shaft

NOTLAR :

ABCD alfabetik harfler ile kodlananparçalar birlikte kullanılır.
Alfabetik kodlamalar prizdireklere göre yapılmıştır.

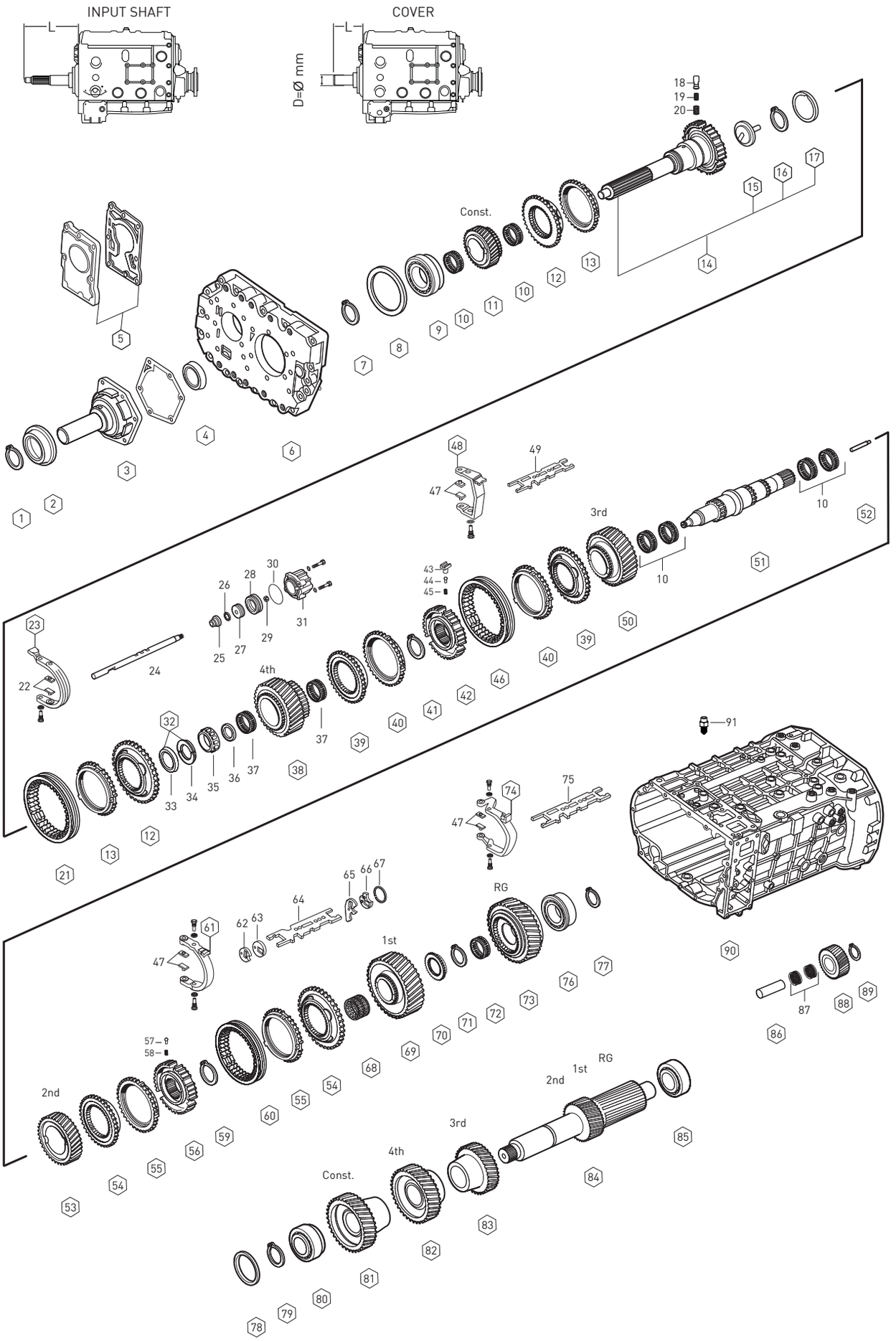

Original parts names, oem numbers, symbols and descriptions used in this catalogue are for reference purposes only.

Fig.	Kacmaz No.	Oem No	Oem Old No	Pcs.	Ürün Tanımı	Description	Sizes	Not	DG 13.30-1.00	DG 13.31-1.00	SG 13.53-0.82
85	K20.01123	0750 117 083	(0750 120 291)	1	GRUP MİLİ ARKA BİLYA	ROLLER BEARING	50.8X95.2X27.7mm		◆	◆	◆
			(0750 120 067)								
			(1246 203 007)								
86	K20.00576	1304 305 030	(1304 305 002)	1	KÜÇÜK GERİ VİTES PİMİ	PIN			◆	◆	◆
87	K20.01333	0750 115 974	(0735 358 192)	2	KÜÇÜK GERİ VİT.MAS.BİLYA	NEEDLE CAGE	40X60X26mm		◆	◆	◆
			(0750 115 229)								
88	K20.00578	1304 305 045	(1304 305 040)	1	KÜÇÜK GERİ VİTES 21 DİŞ	REV.IDLER GEAR 21 T				◆	
			(1304 305 033)								
88	K20.00579	1304 305 044	(1304 305 037)	1	KÜÇÜK GERİ VİTES DİŞLİSİ	REV.IDLER GEAR			◆		
			(1304 305 031)								
			(1304 305 027)								
88	K20.00577	1304 305 043	(1304 305 041)	1	KÜÇÜK GERİ VİTES DİŞLİSİ	REV.IDLER GEAR					◆
			(1304 305 036)								
			(1304 305 028)								
89		0630 502 022		1	KÜÇÜK GERİ VİTES PİM SEG.	RETAINING RING			◆	◆	◆
90		1304 201 100	(1304 201 086)	1	ŞANZIMAN ORTA GÖVDE	HOUSING			◆	◆	
90		1304 201 085		1	ŞANZIMAN ORTA GÖVDE	HOUSING					◆
91		1327 207 009	(1304 207 016)	1	İSTİNAT PİMİ	PIN	60 N		◆	◆	◆
91	K20.00822	1324 207 034	(1313 207 004)	1	İSTİNAT PİMİ	PIN	105 N		◆	◆	◆
91	K20.00814	1324 207 017	(1304 207 024)	1	İSTİNAT PİMİ	PIN	180 N		◆	◆	◆

NOTES :

ABCD alfabetic letters are used in conjunction with the encoded parts.
Alphabetical Coding has been done according to Input Shaft

NOTLAR :

ABCD alfabetik harfler ile kodlananparçalar birlikte kullanılır.
Alfabetik kodlamalar prizdireklere göre yapılmıştır.

Original parts names, oem numbers, symbols and descriptions used in this catalogue are for reference purposes only.

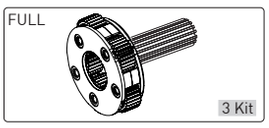

NEW MODEL

Retarder

OLD MODEL

Original parts names, oem numbers, symbols and descriptions used in this catalogue are for reference purposes only.

Fig.	Kacmaz No.	Oem No	Oem Old No	Pcs.	Ürün Tanımı	Description	Sizes	Not	(X1) : 16 S 109	(X2) : 16 S 109	(X3) : 16 S 109
1	K20.00256	1304 304 261		1	GÜNEŞ DİŞLİ 29 DİŞ	SUN GEAR 29 T					
1	K20.00257	1304 304 608		1	GÜNEŞ DİŞLİ 30 DİŞ	SUN GEAR 30 T					
1	K20.00258	1304 304 199		1	GÜNEŞ DİŞLİ 21 DİŞ	SUN GEAR 21 T					
2	K20.00587	1304 232 088	(1304 232 089)	1	ŞANZIMAN HEYKELİ (BOŞ)	PLANETARY CARRIER	EMPTY		◆		◆
			(1304 232 094)								
3	K20.01061	1304 232 088	(1304 232 089)	1	ŞANZIMAN HEYKELİ (DOLU)	PLANETARY CARRIER	FULL		◆		
			(1304 232 094)								
4	K20.00228	1304 232 054		1	HEYK.KOZA DİŞLİ TAKIMI	PLANETARY GEAR SET			◆		
5	K20.00321	1304 332 111	(1304 332 019)	5	HEYKEK KOZA DİŞLİ PİMİ	PLANET SHAFT			◆		
6		0631 329 037		5	KOZA DİŞLİ PİMİ	PIN			◆		
7	K20.01508	0730 150 767	(0501 304 692)	10	HEYKEL KOZA DİŞLİ PULU	THRUST WASHER			◆		
8	K20.01509	0730 103 102		15	HEYKEL KOZA DİŞLİ PULU	THRUST WASHER			◆		
9	K20.01451	0735 470 115		200	HEYK.KOZA DİŞ.TANE BİL.	NEEDLE ROLLER	5X15.3mm		◆		
10	K20.00589	1304 332 134		1	ÇEMBER DİŞLİ 90 DİŞ	RING WHEEL 90 T			◆		
11		0730 513 755		1	PLANET ÇAN DİŞLİ BİLYA SEG.	RETAINING RING	2.50mm		◆		
11		0730 513 756		1	PLANET ÇAN DİŞLİ BİLYA SEG.	RETAINING RING	2.40mm		◆		
11		0730 513 757		1	PLANET ÇAN DİŞLİ BİLYA SEG.	RETAINING RING	2.30mm		◆		
11		0730 513 758		1	PLANET ÇAN DİŞLİ BİLYA SEG.	RETAINING RING	2.20mm		◆		
11		0730 513 759		1	PLANET ÇAN DİŞLİ BİLYA SEG.	RETAINING RING	2.10mm		◆		
11		0730 513 760		1	PLANET ÇAN DİŞLİ BİLYA SEG.	RETAINING RING	2.00mm		◆		
12	K20.01133	0750 116 165	(0635 338 049)	1	PLANET ÇAN DİŞLİ BİLYASI	ROLLER BEARING	80.0X110.0X16.0mm		◆		
13	K20.00591	1304 332 216		1	PLANET ÇAN DİŞLİ	CARRIER HUB			◆		
14	K20.01613	0730 505 140		1	ÇEMBER DİŞLİ SEGMANI	SPRING RING	2.00mm		◆		
15	K20.00230	1304 233 006	(1324 233 006)	1	TEPSİ SENKROMENÇ	FLANGE			◆		
			(1304 233 011)								
16	K20.00038	1296 333 045	(1296 333 022)	2	AĞIR SERİ SENK.FREN.	SYNCHRONIZING CONE			◆		
			(0769 174 091)								
17	K20.00185	1313 333 001		1	AĞIR SERİ YILDIZ DİŞLİ	GUIDE SLEEVE			◆		
18	K20.00471	1240 304 278		9	AĞR.SERİ YILDIZ DİŞ.FİŞ.	PRESSURE PIECE			◆	◆	◆
19	K20.00469	0732 040 385		9	AĞR.SERİ YILDIZ DİŞ.YAYI	SPRING			◆	◆	◆
20	K20.00470	0732 040 386		9	AĞR.SERİ YILDIZ DİŞ.YAYI	SPRING			◆	◆	◆
21		0630 501 061		1	AĞIR SERİ YILDIZ DİŞLİ SEGM.	RETAINING RING	125x4.00mm		◆		
21		0630 501 173		1	AĞIR SERİ YILDIZ DİŞLİ SEGM.	RETAINING RING	125x3.90mm		◆		
21		0630 501 174		1	AĞIR SERİ YILDIZ DİŞLİ SEGM.	RETAINING RING	125x3.80mm		◆		
21		0630 501 175		1	AĞIR SERİ YILDIZ DİŞLİ SEGM.	RETAINING RING	125x3.70mm		◆		
22	K20.00267	1304 333 011		1	AĞIR SERİ SENK.HALKA	ENGAGING SLEEVE			◆		
23	K20.00231	1304 233 013	(1297 233 059)	1	SERİ SENKROMENÇ	ENGAGING RING			◆		
24	K20.00323	1304 232 085	(1304 232 083)	1	SERİ SENKROMENÇ	ENGAGING RING	Retarder		◆		
25	K20.00584	6085 301 003		1	RETARDER DİŞLİ KARŞILIĞI	GEAR	Retarder		◆		
26	K20.00328	1272 334 003		2	AĞIR SERİ HİLAL PABUCU	SLIDING PAD			◆	◆	◆
27		1304 334 063		1	AĞIR SERİ HİLALİ	GEAR SHIFT FORK			◆		

NOTES :
X1,X2,X3 are used in conjunction with the encoded parts.

NOTLAR :
X1,X2,X3 ile kodlanan parçalar birlikte kullanılır.

Original parts names, oem numbers, symbols and descriptions used in this catalogue are for reference purposes only.

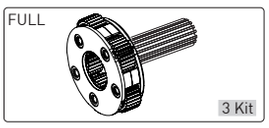

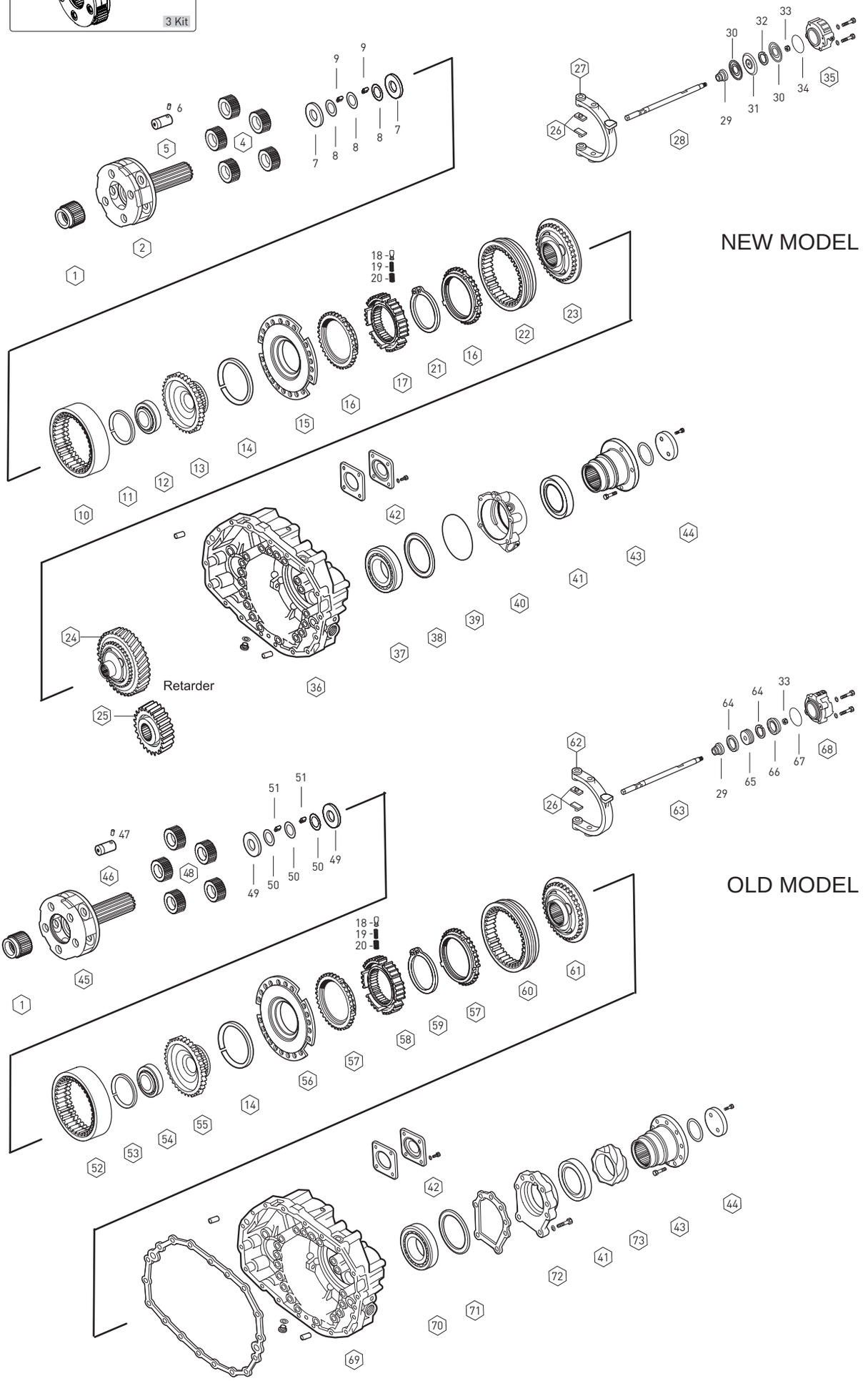

Original parts names, oem numbers, symbols and descriptions used in this catalogue are for reference purposes only.

Fig.	Kacmaz No.	Oem No	Oem Old No	Pcs.	Ürün Tanımı	Description	Sizes	Not	(X1) : 16 S 109	(X2) : 16 S 109	(X3) : 16 S 109
28		1304 334 075		1	AĞIR SERİ HİLAL MİLİ	GEAR SHIFT RAIL			◆		
29	K20.01017	0750 112 047		1	AĞIR SERİ HİLAL MİL KEÇESİ	FLANGE PACKING	22.0X36.0X14.5mm		◆	◆	◆
30	K20.01018	0734 307 287		2	AĞIR SERİ HAVA KEÇESİ	SEALING RING	50.0X100.0X7.5mm		◆		
31	K20.02128	1315 334 041		1	AĞIR SERİ HİLAL MİL PİSTONU	PISTON			◆		
32	K20.01614	0750 112 096		1	AĞIR SERİ HİLAL MİL FİBERİ	GUIDE RING			◆		
33	K20.01774	0737 006 095		1	AĞIR SERİ HİLAL MİL SOMUNU	NUT	M16X1.5mm		◆	◆	◆
34	K20.02135	0634 313 338		1	AĞIR SERİ SİLİNDİR ORİNGİ	O-RING	108.0X3.0mm		◆		
35	K20.00888	1304 334 079	(1304 334 073)	1	AĞIR SERİ SİLİNDİR GÖVDESİ	CYLINDER			◆		
36		1304 301 380		1	ŞANZIMAN ARKA GÖVDE	HOUSING			◆		
37	K20.01156	0750 116 404	(0750 116 197)	1	ŞANZIMAN ARKA BİLYA	ROLLER BEARING	80.0X140.0X26.0mm		◆		
			(0635 332 066)								
38	K20.01615	2049 309 535		1	ŞANZ.ARKA BİLYA RAYNELİ	SHIM	1.90mm		◆		
38	K20.01616	0730 006 534		1	ŞANZ.ARKA BİLYA RAYNELİ	SHIM	1.50mm		◆		
38	K20.01617	2001617		1	ŞANZ.ARKA BİLYA RAYNELİ	SHIM	0.30mm		◆		
38	K20.01618	2001618		1	ŞANZ.ARKA BİLYA RAYNELİ	SHIM	0.20mm		◆		
38	K20.01619	2001619		1	ŞANZ.ARKA BİLYA RAYNELİ	SHIM	0.10mm		◆		
39		0634 303 110		1	ARKA BİLYA KAPAK ORİNGİ	O-RING	138X3mm		◆		
40		1304 301 351		1	ŞANZ.ARKA BİLYA KAPAĞI	BEARING COVER			◆		
41	K20.01012	0734 319 439		1	ŞANZ.ARKA KAPAK KEÇESİ	OIL SEAL	95X115X10mm		◆	◆	◆
41	K20.01022	0734 319 459	(0734 300 421)	1	ŞANZ.ARKA KAPAK KEÇESİ	OIL SEAL	RETARDER-105.0X125.0X12mm		◆		
42		1304 301 034		1	PTO BAĞLANTI KAPAĞI	COVER			◆	◆	◆
43	K20.00585	1304 338 109		1	ŞANZIMAN FLANŞI	COMP.FLANGE	4-H, Ø180mm		◆	◆	◆
43	K20.00340	1304 338 097		1	ŞANZIMAN FLANŞI	COMP.FLANGE	4-H, Ø180mm		◆	◆	◆
44	K20.01620	1304 338 072		1	ŞANZIMAN FLANŞ PULU	WASHER			◆	◆	◆
45	K20.00588	1304 232 086	(1304 232 087)	1	ŞANZIMAN HEYKELİ	PLANETARY CARRIER				◆	
46	K20.00321	1304 332 111	(1316 332 019)	5	HEYKEL KOZA DİŞLİ PİMİ	PLANET SHAFT				◆	◆
47		0631 329 037		5	KOZA DİŞLİ PİMİ	PIN				◆	◆
48	K20.00338	1304 232 022		1	HEYK.KOZA DİŞLİ TAKIMI	PLANETARY GEAR SET				◆	
48	K20.00227	1304 232 026		1	HEYK.KOZA DİŞLİ TAKIMI	PLANETARY GEAR SET					◆
49	K20.01508	0730 150 767	(0501 304 692)	10	HEYKEL KOZA DİŞLİ PULU	THRUST WASHER				◆	◆
50	K20.01509	0730 103 102		15	HEYKEL KOZA DİŞLİ PULU	THRUST WASHER				◆	◆
51	K20.01451	0735 470 115		200	HEYK.KOZA DİŞ.TANE BİL.	NEEDLE ROLLER	5X15.3mm			◆	◆
52	K20.00590	1304 332 043		1	ÇEMBER DİŞLİ 74 DİŞ	RING WHELL 74 T				◆	
52	K20.00582	1304 332 178		1	ÇEMBER DİŞLİ 86 DİŞ	RING WHELL 86 T					◆
53		0630 513 073		1	PLANET ÇAN DİŞLİ BİLYA SEG.	RETAINING RING	90X2.50mm			◆	◆
53		0630 513 187		1	PLANET ÇAN DİŞLİ BİLYA SEG.	RETAINING RING	90X2.40mm			◆	◆
53		0630 513 188		1	PLANET ÇAN DİŞLİ BİLYA SEG.	RETAINING RING	90X2.30mm			◆	◆
53		0630 513 189		1	PLANET ÇAN DİŞLİ BİLYA SEG.	RETAINING RING	90X2.20mm			◆	◆
53		0630 513 190		1	PLANET ÇAN DİŞLİ BİLYA SEG.	RETAINING RING	90X2.10mm			◆	◆
53		0630 513 191		1	PLANET ÇAN DİŞLİ BİLYA SEG.	RETAINING RING	90X2.00mm			◆	◆
53		0630 513 238		1	PLANET ÇAN DİŞLİ BİLYA SEG.	RETAINING RING	90X1.90mm			◆	◆

NOTES :
X1,X2,X3 are used in conjunction with the encoded parts.

NOTLAR :
X1,X2,X3 ile kodlanan parçalar birlikte kullanılır.

Original parts names, oem numbers, symbols and descriptions used in this catalogue are for reference purposes only.

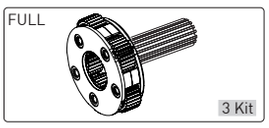

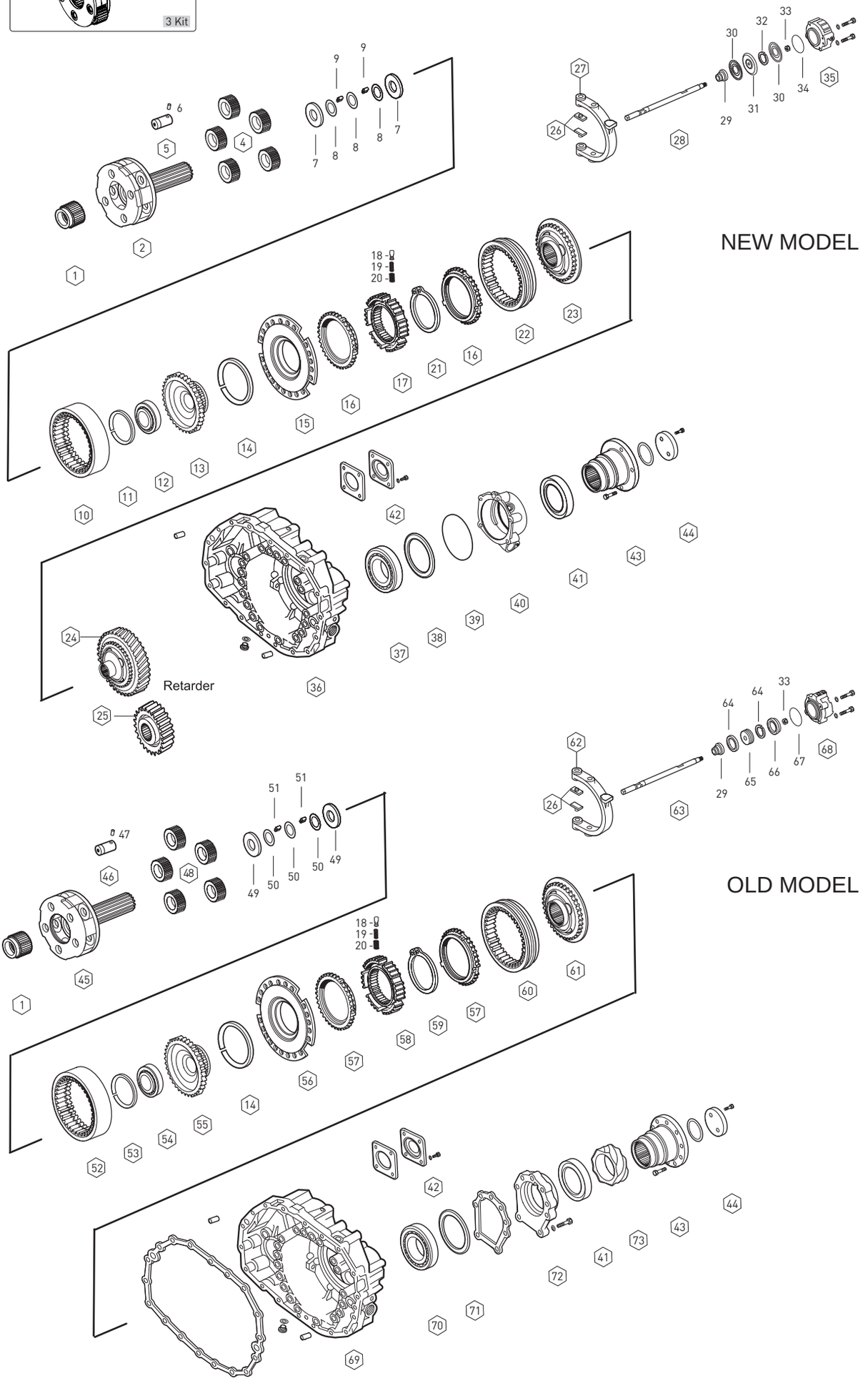

Original parts names, oem numbers, symbols and descriptions used in this catalogue are for reference purposes only.

Fig.	Kacmaz No.	Oem No	Oem Old No	Pcs.	Ürün Tanımı	Description	Sizes	Not	(X1) : 16S 109	(X2) : 16S 109	(X3) : 16S 109
54	K20.01334	0735 340 080	(0635 338 028)	1	PLANET ÇAN DİŞLİ BİLYASI	ROLLER BEARING	70.0X90.0X10.0mm			◆	◆
55	K20.00586	1304 332 060		1	PLANET ÇAN DİŞLİ 86 DİŞ	CARRIER HUB 86 T					◆
55	K20.00592	1304 332 217		1	PLANET ÇAN DİŞLİ 74 DİŞ	CARRIER HUB 74 T				◆	
56	K20.00229	1304 233 005	(1304 233 004)	1	TEPSİ SENKROMENÇ	FLANGE				◆	◆
57	K20.00268	1304 333 005	(1304 333 021)	2	AĞIR SERİ SENK.FRENLEME	SYNCHRONIZING CONE				◆	◆
58	K20.00265	1304 332 066		1	AĞIR SERİ YILDIZ DİŞLİ	GUIDE SLEEVE				◆	◆
59		0630 501 141		1	AĞIR SERİ YILDIZ DİŞLİ SEGM.	RETAINING RING	100X3.20mm			◆	◆
59		0630 501 152		1	AĞIR SERİ YILDIZ DİŞLİ SEGM.	RETAINING RING	100X3.10mm			◆	◆
59		0630 501 056		1	AĞIR SERİ YILDIZ DİŞLİ SEGM.	RETAINING RING	100X3.00mm			◆	◆
59		0630 501 385		1	AĞIR SERİ YILDIZ DİŞLİ SEGM.	RETAINING RING	100X2.90mm			◆	◆
60	K20.00264	1304 332 089	(1304 332 065)	1	AĞIR SERİ SENK.HALKA	ENGAGING SLEEVE				◆	◆
61	K20.00266	1304 332 075		1	SERİ SENKROMENÇ	ENGAGING RING				◆	◆
62	K20.00888	1304 334 039	(1304 334 073)	1	AĞIR SERİ HİLALİ	GEAR SHIFT FORK				◆	◆
63		1304 334 009		1	AĞIR SERİ HİLAL MİLİ	GEAR SHIFT RAIL				◆	◆
64	K20.01023	0734 307 296	(0750 112 049)	2	AĞIR SERİ HAVA KEÇESİ	RING	74.0X84.0X5.0mm			◆	◆
65		1304 334 072	(1304 334 014)	1	A.SERİ HİLAL MİL PİSTONU	PISTON				◆	◆
66	K20.01621	0750 145 003		1	AĞIR SERİ HİLAL MİL FİBERİ	GUIDE RING				◆	◆
67		0634 313 232		1	AĞIR SERİ SİLİNDİR ORİNGİ	O-RING	95.0X2.0mm			◆	◆
68		1304 334 061	(1304 334 037)	1	AĞIR SERİ SİLİNDİR GÖVDESİ	CYLINDER				◆	◆
69		1304 301 360	(1304 301 315)	1	ŞANZIMAN ARKA GÖVDE	HOUSING				◆	◆
70	K20.01129	0750 116 048	(0735 330 137)	1	ŞANZIMAN ARKA BİLYA	ROLLER BEARING	78.0X130.0X25.0mm			◆	◆
71	K20.01622	0730 002 546		1	ŞANZ.ARKA BİLYA RAYNELİ	SHIM	1.60mm			◆	◆
71	K20.01623	2001623		1	ŞANZ.ARKA BİLYA RAYNELİ	SHIM	0.30mm			◆	◆
71	K20.01624	2001624		1	ŞANZ.ARKA BİLYA RAYNELİ	SHIM	0.20mm			◆	◆
71	K20.01625	2001625		1	ŞANZ.ARKA BİLYA RAYNELİ	SHIM	0.10mm			◆	◆
72		1304 301 089	(1304 301 016)	1	ŞANZ.ARKA BİLYA KAPAĞI	BEARING COVER				◆	◆
73		1304 338 020		1	ŞANZ.DEVİR DİŞLİSİ	GEAR				◆	◆

NOTES :
X1,X2,X3 are used in conjunction with the encoded parts.

NOTLAR :
X1,X2,X3 ile kodlanan parçalar birlikte kullanılır.

Original parts names, oem numbers, symbols and descriptions used in this catalogue are for reference purposes only.

SYNCHRONIZER KIT Const.

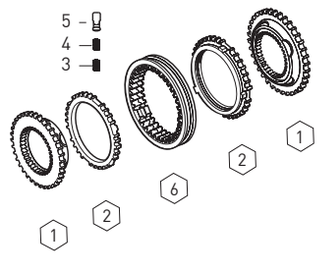

Fig.	Kacmaz No.	Oem No	Oem Old No	Pcs.	Ürün Tanımı	Description
	K20.00985	2000985		Kit	TAKVİYE SENKROMENÇ KİT	SYNCH.KIT Const.
1	K20.00234	1304 302 188	(1304 302 006)	2	TAKVİYE SENKROMENÇ	ENGAGING RING
2	K20.00259	1304 304 680	(1304 304 496)	2	TAKVİYE FRENLEME	SYNCH.CONE
3	K20.00469	0732 040 385		3	PRİZDİREK YAYI	SPRING
4	K20.00470	0732 040 386		3	PRİZDİREK YAYI	SPRING
5	K20.00471	1240 304 278		3	PRİZDİREK FİŞEĞİ	PRESSURE PIECE
6	K20.00244	1240 304 272	(1240 304 205)	1	TAKVİYE SENK.HALKA	ENGAGING SLEEVE

SYNCHRONIZER KIT 3rd/4th

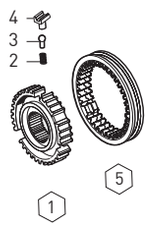

Fig.	Kacmaz No.	Oem No	Oem Old No	Pcs.	Ürün Tanımı	Description
	K20.00476	1304 204 050		Kit	3./4.VİT.HALKA YILDIZ KİTİ	SYNCH.KIT 3rd/4th
1	K20.00252	1304 304 515		1	3./4.VİT.YILDIZ DİŞLİ	GUIDE SLEEVE
2	K20.00110	0732 040 409		3	3./4.VİT.YILDIZ DİŞLİ YAYI	SPRING
3	K20.00467	1249 304 222		3	3./4.VİT.YILDIZ DİŞLİ PİMİ	PIN
4	K20.00468	1238 304 394		3	3./4.VİT.YILDIZ DİŞLİ FİŞEĞİ	PRESSURE PIECE
5	K20.00253	1304 304 688	(6002 305 511)	1	3./4.VİT.SENK.HALKA	ENGAGING SLEEVE

SYNCHRONIZER KIT 3rd/4th

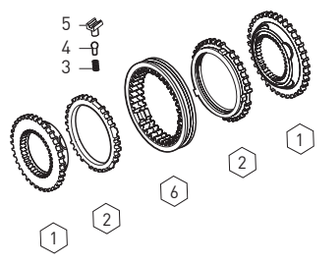

Fig.	Kacmaz No.	Oem No	Oem Old No	Pcs.	Ürün Tanımı	Description
	K20.00477	1304 298 981		Kit	3./4.VİT.SENKROMENÇ KİT	SYNCH.KIT 3rd/4th
1	K20.00247	1304 304 012		2	3./4.VİT.SENKROMENÇ	ENGAGING RING
2	K20.00260	1304 304 683	(1304 304 014)	2	3./4.VİT.FRENLEME	SYNCH.CONE
3	K20.00110	0732 040 409		3	3./4.VİT.YILDIZ DİŞLİ YAYI	SPRING
4	K20.00467	1249 304 222		3	3./4.VİT.YILDIZ DİŞLİ PİMİ	PIN
5	K20.00468	1238 304 394		3	3./4.VİT.YILDIZ DİŞLİ FİŞEĞİ	PRESSURE PIECE
6	K20.00253	1304 304 688	(6002 305 511)	1	3./4.VİT.SENK.HALKA	ENGAGING SLEEVE

SYNCHRONIZER KIT 3rd/4th

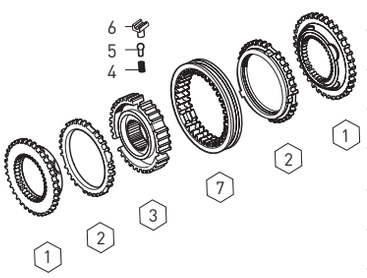

Fig.	Kacmaz No.	Oem No	Oem Old No	Pcs.	Ürün Tanımı	Description
	K20.00478	1304 298 969		Kit	3./4.VİT.SENKROMENÇ KİT	SYNCH.KIT 3rd/4th
1	K20.00247	1304 304 012		2	3./4.VİT.SENKROMENÇ	ENGAGING RING
2	K20.00260	1304 304 683	(1304 304 014)	2	3./4.VİT.FRENLEME	SYNCH.CONE
3	K20.00252	1304 304 515		1	3./4.VİT.YILDIZ DİŞLİ	GUIDE SLEEVE
4	K20.00110	0732 040 409		3	3./4.VİT.YILDIZ DİŞLİ YAYI	SPRING
5	K20.00467	1249 304 222		3	3./4.VİT.YILDIZ DİŞLİ PİMİ	PIN
6	K20.00468	1238 304 394		3	3./4.VİT.YILDIZ DİŞLİ FİŞEĞİ	PRESSURE PIECE
7	K20.00253	1304 304 688	(6002 305 511)	1	3./4.VİT.SENK.HALKA	ENGAGING SLEEVE

SYNCHRONIZER KIT 1st/2nd

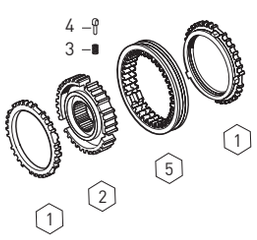

Fig.	Kacmaz No.	Oem No	Oem Old No	Pcs.	Ürün Tanımı	Description
	K20.00479	1304 204 049		Kit	1./2.VİT.SENKROMENÇ KİT	SYNCH.KIT 1st/2nd.
1	K20.00262	1304 304 681		2	1./ 2.VİT.SENK.FRENLEME	SYNCH.CONE
2	K20.00254	1304 304 653	(1304 304 697)	1	1./ 2.VİT.YILDIZ DİŞLİ	GUIDE SLEEVE
3	K20.00110	0732 040 409		3	1./ 2.VİT.YILDIZ DİŞ.YAYI	SPRING
4	K20.00111	1297 304 436		3	1./ 2.VİT.YILDIZ DİŞ.FİŞEĞİ	PRESSURE PIECE
5	K20.00255	1304 304 597	(1304 304 541)	1	1./ 2.VİT.SENK.HALKA	ENGAGING SLEEVE

SYNCHRONIZER KIT 1st/2nd

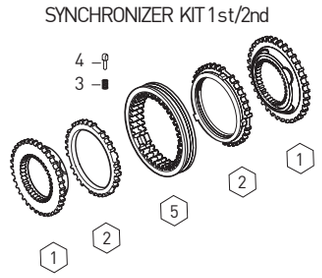

Fig.	Kacmaz No.	Oem No	Oem Old No	Pcs.	Ürün Tanımı	Description
	K20.00480	1304 298 980		Kit	1./2.VİT.SENKROMENÇ KİT	SYNCH.KIT 1st/2nd.
1	K20.00261	1304 304 408		2	1./ 2.VİT.SENKROMENÇ	ENGAGING RING
2	K20.00262	1304 304 681	(1304 304 542)	2	1./ 2.VİT.SENK.FRENLEME	SYNCHRONIZING CONE
3	K20.00110	0732 040 409		3	1./ 2.VİT.YILDIZ DİŞ.YAYI	SPRING
4	K20.00111	1297 304 436		3	1./ 2.VİT.YILDIZ DİŞ.FİŞEĞİ	PRESSURE PIECE
5	K20.00255	1304 304 597	(1324 304 053)	1	1./ 2.VİT.SENK.HALKA	ENGAGING SLEEVE
			(1304 304 541)			

Original parts names, oem numbers, symbols and descriptions used in this catalogue are for reference purposes only.

Fig.	Kacmaz No.	Oem No	Oem Old No	Pcs.	Ürün Tanımı	Description
	K20.00481	1304 298 968		Kit	1./2.VİT.SENKROMENÇ KİT	SYNCH.KIT 1st/2nd
1	K20.00261	1304 304 408		2	1./ 2.VİT.SENKROMENÇ	ENGAGING RING
2	K20.00262	1304 304 681	(1304 304 542)	2	1./ 2.VİT.SENK.FRENLEME	SYNCHRONIZING CONE
3	K20.00254	1304 304 653	(1304 304 697)	1	1./ 2.VİT.YILDIZ DİŞLİ	GUIDE SLEEVE
4	K20.00110	0732 040 409		3	1./ 2.VİT.YILDIZ DİŞ.YAYI	SPRING
5	K20.00111	1297 304 436		3	1./ 2.VİT.YILDIZ DİŞ.FİŞEĞİ	PRESSURE PIECE
6	K20.00255	1304 304 597	(1324 304 053)	1	1./ 2.VİT.SENK.HALKA	ENGAGING SLEEVE
			(1304 304 541)			

SYNCHRONIZER KIT 1st/2nd

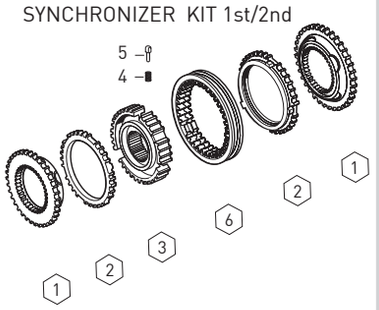

GEARBOX GASKET KIT

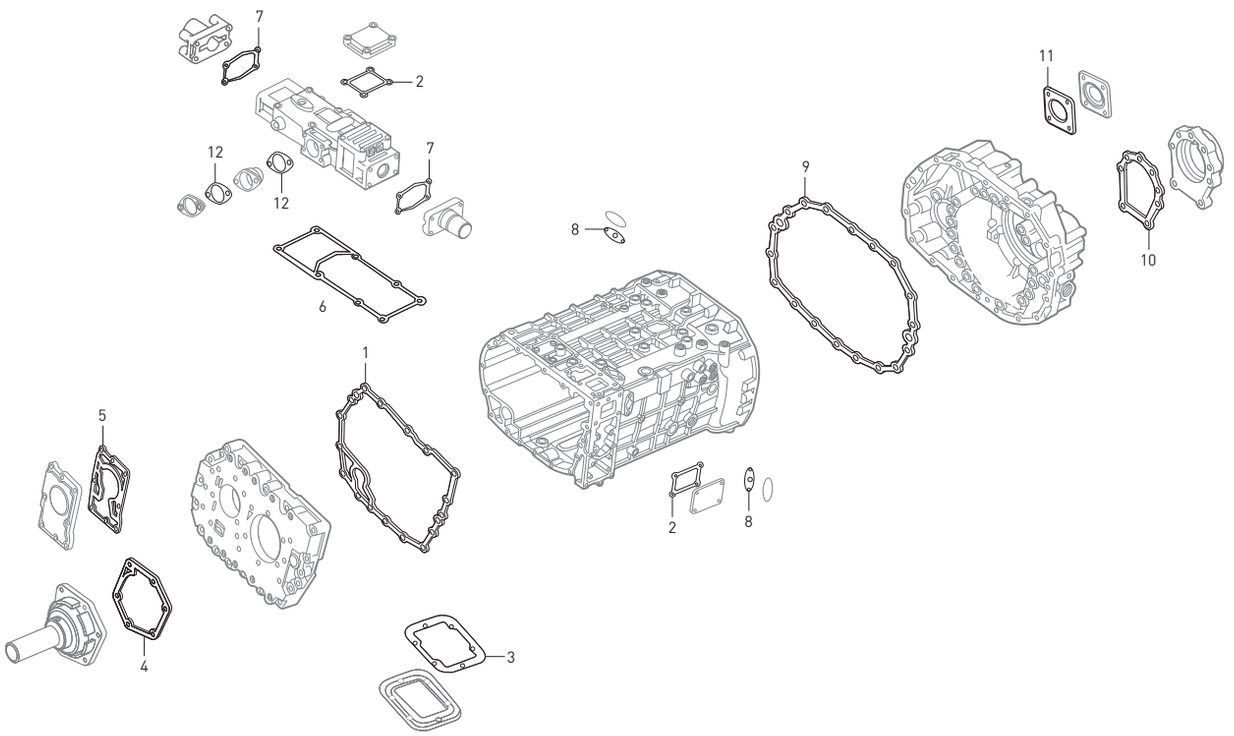

Fig.	Kacmaz No.	Oem No	Oem Old No	Pcs.	Ürün Tanımı	Description
	K20.01583	1304 298 914	(1304 298 902)	Kit	ŞANZIMAN CONTA TAKIMI	GASKET KIT
1		0501 313 379		1	ŞANZ.ÖN KAPAK CONTASI	GASKET
2		1304 307 437	(1304 307 176)	2	ŞANZ.KULE BAĞ.KAPAK CONTASI	GASKET
3		1290 301 140	(1290 301 073)	1	ŞANZ.DAMPER CONTASI	GASKET
4		0501 316 990	(0501 313 678)	1	PRİZ.KEÇE KAPAK CONTASI	GASKET
5		1304 303 297		1	YAĞ POMPA CONTASI	GASKET
6		1304 307 338		1	ŞANZ.KULE ALT CONTASI	GASKET
7		0501 318 308	(1304 307 177)	2	ŞANZ.KULE KAPAK CONTASI	GASKET
8		1268 307 170	(1268 307 091)	2	ŞANZ.MÜŞÜR KAPAK CONTASI	GASKET
9		1304 301 063	(1304 301 030)	1	ŞANZ.ARKA GÖVDE CONTASI	GASKET
10		1304 301 109	(1304 301 021)	1	ŞANZ.ARKA KEÇE KAPAK CONTASI	GASKET
11	K20.02108	1238 308 201	(1238 308 166)	1	PTO BAĞLANTI KAPAK CONTASI	GASKET
12		1304 307 277	(1304 307 196)	2	ŞANZ.İSTİNAT KAPAK CONTASI	GASKET

Original parts names, oem numbers, symbols and descriptions used in this catalogue are for reference purposes only.

X1 - X2

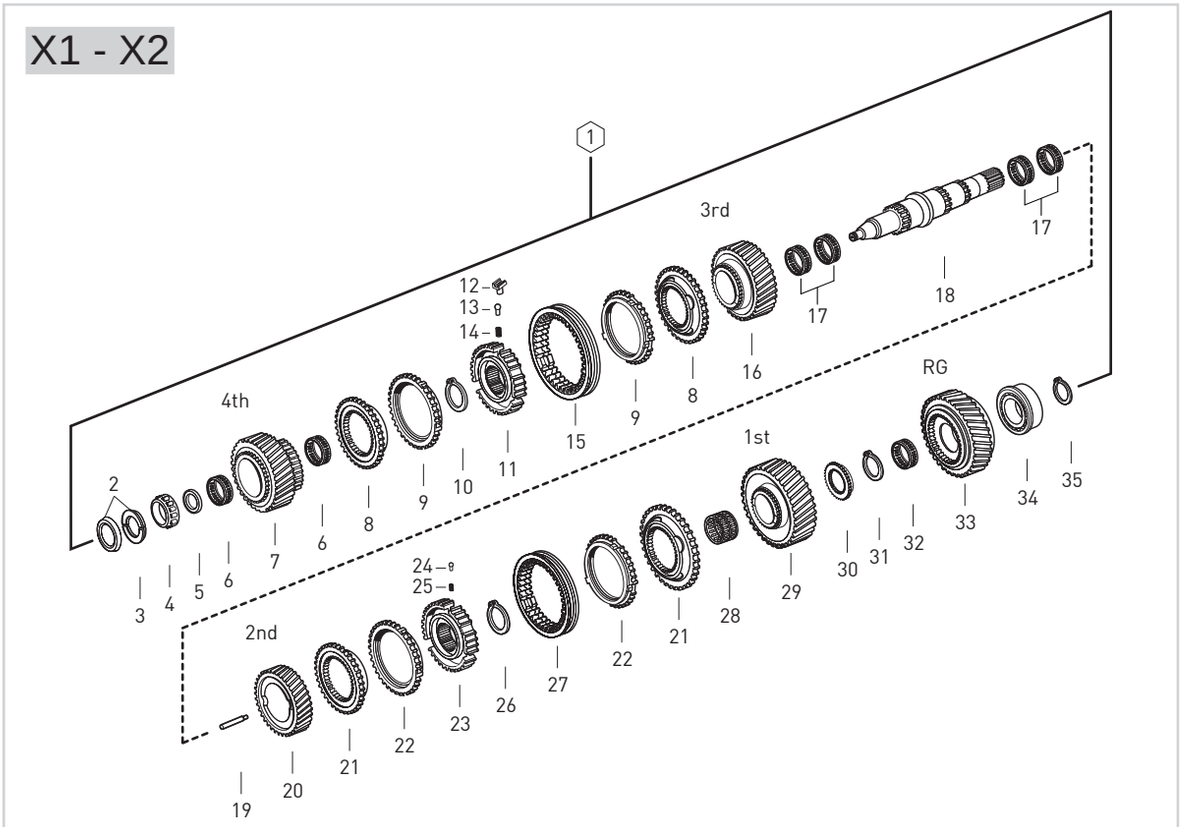

Fig	Kacmaz No.	Oem No	Oem Old No	Pcs.	Ürün Tanımı	Description	Sizes
1	K20.01050	2001050		kit	KAMALI MİL KOMPLE	MAIN SHAFT COMPLETE	
2	K20.01538	1499 298 157		1	EMN.SACI VE K.MİL UÇ KİLİDİ	SPLIT RING KIT	3.80mm
3	K20.01540	0730 063 154		1	KAMALI MİL EMNİYET SACI	RETAINING RING	
4	K20.01106	0735 371 406		1	KAMALI MİL UÇ BİLYA	ROLLER BEARING	32x33mm
5	K20.01517	0501 314 139		1	KAMALI MİL UÇ BİLYA PULU	THRUST WASHER	
6	K20.01301	0750 115 299		2	4.VİTES DİŞLİ MASURA BİLYA	ROLLER BEARING	59.50x81.50x22mm
7	K20.00245	1304 304 516		1	4.VİTES DİŞLİSİ 27 DİŞ	GEAR 4th 27 T	
8	K20.00247	1304 304 012		2	3./4.VİTES KİLİT SENKROMENÇ	ENGAGING RING	
9	K20.00260	1304 304 683	(1304 304 014)	2	3./4.VİTES SENK.FRENLEME	SYNCHRONIZING CONE	
10		0630 501 044		1	3./4. VİTES YILDIZ DİŞLİ SEKMANI	RETAINING RING	2.50mm
11	K20.00252	1304 304 515		1	3./4. VİTES YILDIZ DİŞLİ	GUIDE SLEEVE	
12	K20.00468	1238 304 394		3	3./4.VİTES YILDIZ DİŞLİ FİŞEĞİ	PRESSURE PIECE	
13	K20.00467	1249 304 222		3	3./4.VİTES YILDIZ DİŞLİ PİMİ	PIN	
14	K20.00110	0732 040 409		3	3./4.VİTES YILDIZ DİŞLİ FİŞEK YAYI	SPRING	
15	K20.00253	1304 304 688	(6002 305 511)	1	3./4.VİTES SENK.HALKA	ENGAGING SLEEVE	
16	K20.00248	1304 304 475		1	3.VİTES DİŞLİSİ 29 DİŞ	GEAR 3rd 29 T	
17	K20.01307	0735 320 816		4	2./3.VİTES MASURA BİLYA	NEEDLE CAGE	75x83x23mm
18	K20.00331	1304 304 630		1	KAMALI MİL	MAIN SHAFT	
19	K20.01506	1312 304 150	(1324 304 014)	1	KAMALI MİL YAĞ BORUSU	OIL PIPE	
20	K20.00250	1304 304 497	(1304 304 695)	1	2.VİTES DİŞLİSİ 32 DİŞ	GEAR 2nd 32 T	
21	K20.00261	1304 304 408		2	1./2.VİTES KİLİT SENKROMENÇ	ENGAGING RING	
22	K20.00262	1304 304 681	(1304 304 542)	2	1./2.VİTES SENK.FRENLEME	SYNCHRONIZING CONE	
23	K20.00254	1304 304 653		1	1./2.VİTES YILDIZ DİŞLİ	GUIDE SLEEVE	
24	K20.00111	1297 304 436		3	1./2.VİTES YILDIZ DİŞLİ FİŞEĞİ	PRESSURE PIECE	
25	K20.00110	0732 040 409		3	1./2.VİTES YILDIZ DİŞLİ FİŞEK YAYI	SPRING	
26		0630 501 046		1	1./2.VİTES YILDIZ DİŞLİ SEKMANI	RETAINING RING	2.50mm
27	K20.00255	1304 304 597	(1324 304 053)	1	1./2.VİTES SENK.HALKA	ENGAGING SLEEVE	
28	K20.01310	0750 115 224		1	1.VİTES MASURA BİLYA	NEEDLE CAGE	70x78x50mm
29	K20.00333	1304 304 549		1	1.VİTES DİŞLİSİ 37 DİŞ	GEAR 1st 37 T	
30	K20.00263	1304 304 007		1	GERİ VİTES YILDIZ DİŞLİ	GUIDE SLEEVE	
31		0630 501 195		1	GERİ VİT.YILDIZ DİŞLİ SEKMANI	RETAINING RING	2.80mm
32	K20.01309	0750 115 225		1	GERİ VİTES MASURA BİLYA	NEEDLE CAGE	60x68x39mm
33	K20.00336	1304 304 671		1	GERİ VİTES DİŞLİSİ 35 DİŞ	REVERSE GEAR 35 T	
34	K20.01113	0735 371 605		1	KAMALI MİL ARKA BİLYA	ROLLER BEARING	
35		0630 531 050		1	KAMALI MİL ARKA SEKMAN	RETAINING RING	40x2.50mm

Original parts names, oem numbers, symbols and descriptions used in this catalogue are for reference purposes only.

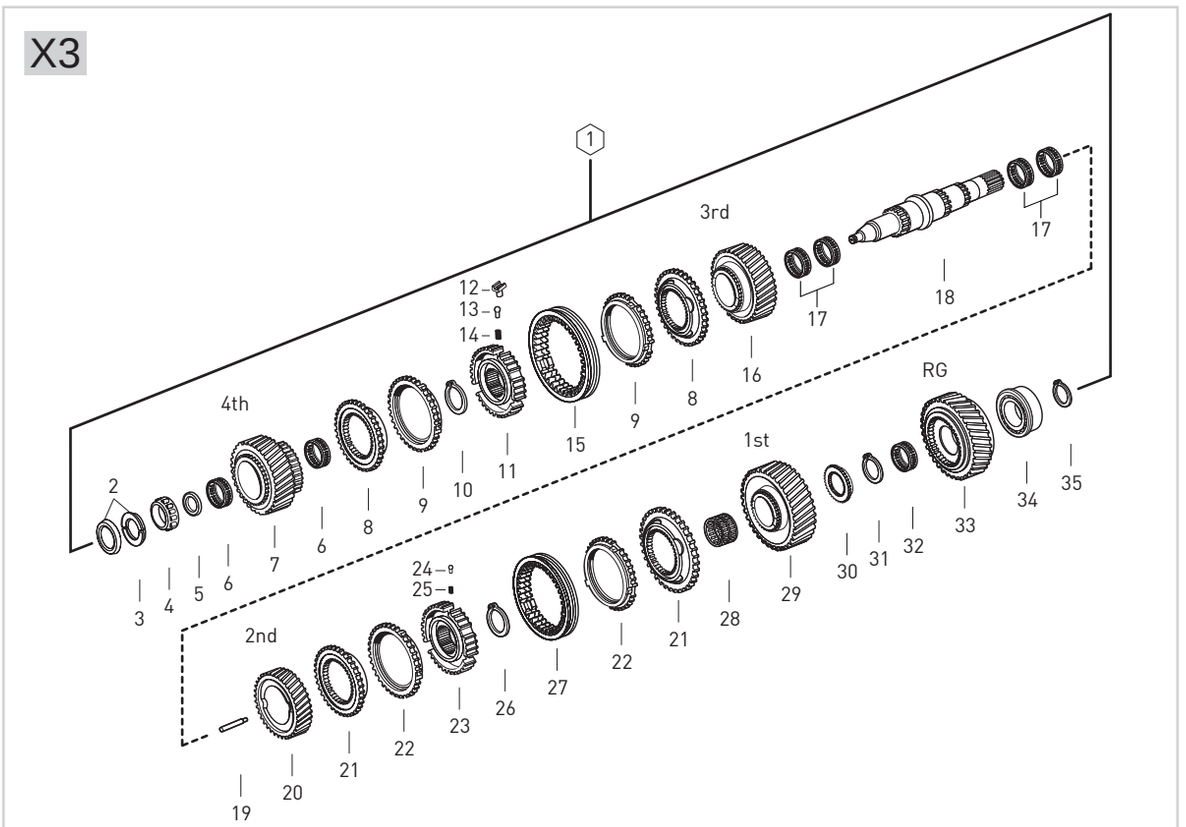

Fig	Kacmaz No.	Oem No	Oem Old No	Pcs.	Ürün Tanımı	Description	Sizes
1	K20.01051	2001051		kit	KAMALI MİL KOMPLE	MAIN SHAFT COMPLETE	
2	K20.01538	1499 298 157		1	EMN.SACI VE K.MİL UÇ KİLİDİ	SPLIT RING KIT	3.80mm
3	K20.01540	0730 063 154		1	KAMALI MİL EMNİYET SACI	RETAINING RING	
4	K20.01106	0735 371 406		1	KAMALI MİL UÇ BİLYA	ROLLER BEARING	32x33mm
5	K20.01517	0501 314 139		1	KAMALI MİL UÇ BİLYA PULU	THRUST WASHER	
6	K20.01301	0750 115 299		2	4.VİTES DİŞLİ MASURA BİLYA	ROLLER BEARING	59.50x81.50x22mm
7	K20.00246	1304 304 518		1	4.VİTES DİŞLİSİ 27 DİŞ	GEAR 4th 27 T	
8	K20.00247	1304 304 012		2	3./4.VİTES KİLİT SENKROMENÇ	ENGAGING RING	
9	K20.00260	1304 304 683	(1304 304 014)	2	3./4.VİTES SENK.FRENLEME	SYNCHRONIZING CONE	
10		0630 501 044		1	3./4. VİTES YILDIZ DİŞLİ SEKMANI	RETAINING RING	2.50mm
11	K20.00252	1304 304 515		1	3./4. VİTES YILDIZ DİŞLİ	GUIDE SLEEVE	
12	K20.00468	1238 304 394		3	3./4.VİTES YILDIZ DİŞLİ FİŞEĞİ	PRESSURE PIECE	
13	K20.00467	1249 304 222		3	3./4.VİTES YILDIZ DİŞLİ PİMİ	PIN	
14	K20.00110	0732 040 409		3	3./4.VİTES YILDIZ DİŞLİ FİŞEK YAYI	SPRING	
15	K20.00253	1304 304 688	(6002 305 511)	1	3./4.VİTES SENK.HALKA	ENGAGING SLEEVE	
16	K20.00249	1304 304 417		1	3.VİTES DİŞLİSİ 32 DİŞ	GEAR 3rd 32 T	
17	K20.01307	0735 320 816		4	2./3.VİTES MASURA BİLYA	NEEDLE CAGE	75x83x23mm
18	K20.00331	1304 304 630		1	KAMALI MİL	MAIN SHAFT	
19	K20.01506	1312 304 150	(1324 304 014)	1	KAMALI MİL YAĞ BORUSU	OIL PIPE	
20	K20.00251	1304 304 422		1	2.VİTES DİŞLİSİ 37 DİŞ	GEAR 2nd 37 T	
21	K20.00261	1304 304 408		2	1./2.VİTES KİLİT SENKROMENÇ	ENGAGING RING	
22	K20.00262	1304 304 681	(1304 304 542)	2	1./2.VİTES SENK.FRENLEME	SYNCHRONIZING CONE	
23	K20.00254	1304 304 653		1	1./2.VİTES YILDIZ DİŞLİ	GUIDE SLEEVE	
24	K20.00111	1297 304 436		3	1./2.VİTES YILDIZ DİŞLİ FİŞEĞİ	PRESSURE PIECE	
25	K20.00110	0732 040 409		3	1./2.VİTES YILDIZ DİŞLİ FİŞEK YAYI	SPRING	
26		0630 501 046		1	1./2.VİTES YILDIZ DİŞLİ SEKMANI	RETAINING RING	2.50mm
27	K20.00255	1304 304 597	(1324 304 053)	1	1./2.VİTES SENK.HALKA	ENGAGING SLEEVE	
28	K20.01310	0750 115 224		1	1.VİTES MASURA BİLYA	NEEDLE CAGE	70x78x50mm
29	K20.00334	1304 304 376		1	1.VİTES DİŞLİSİ 38 DİŞ	GEAR 1st 38 T	
30	K20.00263	1304 304 007		1	GERİ VİTES YILDIZ DİŞLİ	GUIDE SLEEVE	
31		0630 501 195		1	GERİ VİT.YILDIZ DİŞLİ SEKMANI	RETAINING RING	2.80mm
32	K20.01309	0750 115 225		1	GERİ VİTES MASURA BİLYA	NEEDLE CAGE	60x68x39mm
33	K20.00337	1304 304 670		1	GERİ VİTES DİŞLİSİ 35 DİŞ	REVERSE GEAR 35 T	
34	K20.01113	0735 371 605		1	KAMALI MİL ARKA BİLYA	ROLLER BEARING	
35		0630 531 050		1	KAMALI MİL ARKA SEKMAN	RETAINING RING	40x2.50mm

Original parts names, oem numbers, symbols and descriptions used in this catalogue are for reference purposes only.

X1 - X2

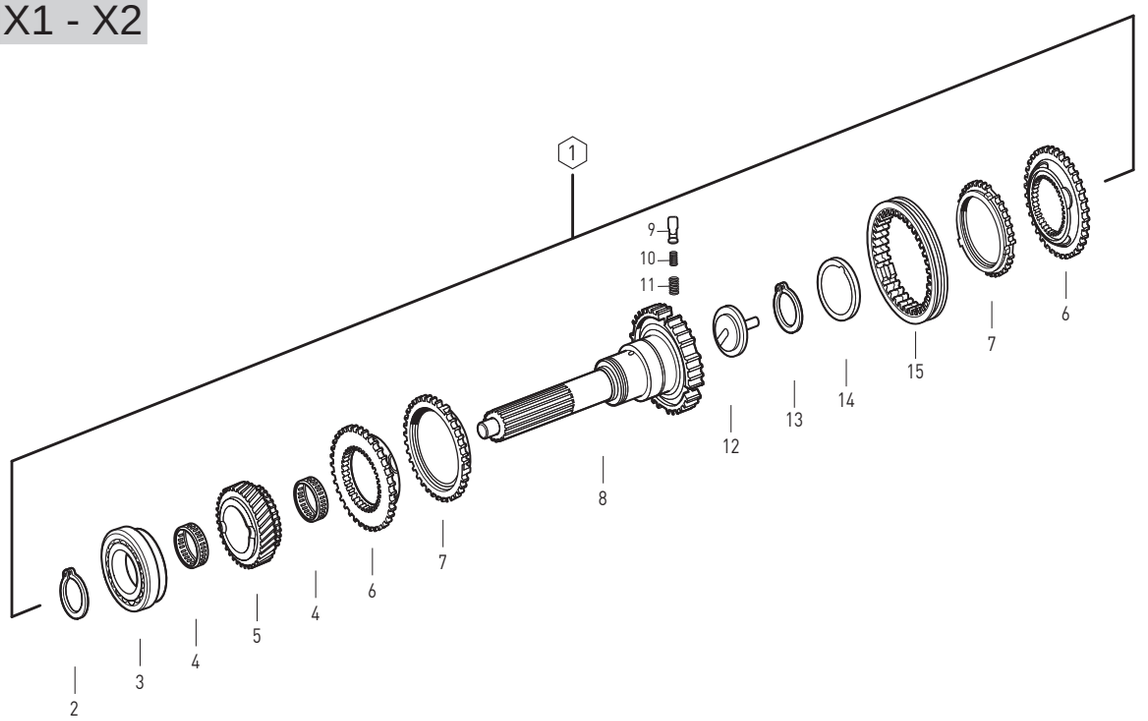

Fig.	Kacmaz No.	Oem No	Oem Old No	Pcs.	Ürün Tanımı	Description	Sizes
1	K20.01052	2001052		kit	PRİZDİREK KOMPLE	INPUT SHAFT COMPLETE	
2	K20.02192	0730 501 360		1	PRİZ.ÖN BİLYA SEKMANI	RETAINING RING	4.00mm
3	K20.01101	0750 117 079	(0735 370 233)	1	PRİZDİREK ÖN BİLYA	ROLLER BEARING	66.60x117.40x30.10mm
4	K20.01307	0735 320 816		2	TAKVİYE MASURA BİLYA	NEEDLE CAGE	75x83x23mm
5	K20.00232	1304 302 169	(1304 302 137)	1	TAKVİYE DİŞLİSİ 26 DİŞ	CONSTANT GEAR 26 T	
6	K20.00234	1304 302 188	(1304 302 006)	2	TAKVİYE SENKROMENÇ	ENGAGING RING	
7	K20.00259	1304 304 680	(1304 304 496)	2	TAKVİYE SENK.FRENLEME	SYNCHRONIZING RING	
8	K20.00225	1304 202 202	(1304 202 260)	1	PRİZDİREK	INPUT SHAFT	
			(1304 302 404)				
9	K20.00471	1240 304 278		3	PRİZDİREK FİŞEĞİ	PRESSURE PIECE	
10	K20.00469	0732 040 385		3	PRİZDİREK YAYI	SPRING	
11	K20.00470	0732 040 386		3	PRİZDİREK YAYI	SPRING	
12	K20.01501	1304 302 440		1	PRİZDİREK YAĞ PİPETİ	OIL PIPET	
13	K20.01502	0630 502 063		1	PRİZDİREK YAĞ PİPET SEKMANI	RETAINING RING	58x2.00mm
14	K20.01010	0501 311 146		1	PRİZDİREK ARKA KEÇE	OIL SEAL	
15	K20.00244	1240 304 272	(1240 304 205)	1	TAKVİYE SENK.HALKA	ENGAGING SLEEVE	

Original parts names, oem numbers, symbols and descriptions used in this catalogue are for reference purposes only.

X3

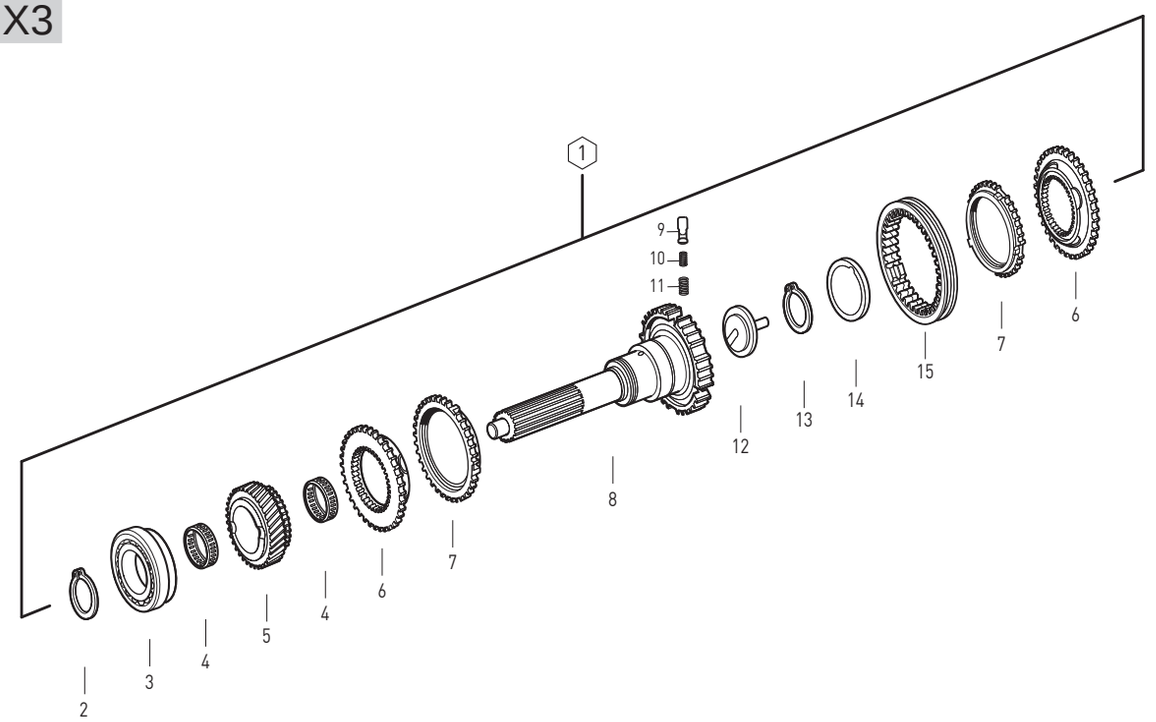

Fig.	Kacmaz No.	Oem No	Oem Old No	Pcs.	Ürün Tanımı	Description	Sizes
1	K20.01053	2001053		kit	PRİZDİREK KOMPLE	INPUT SHAFT	
2	K20.02192	0730 501 360		1	PRİZ.ÖN BİLYA SEKMANI	RETAINING RING	4.00mm
3	K20.01101	0750 117 079	(0735 370 233)	1	PRİZDİREK ÖN BİLYA	ROLLER BEARING	66.60x117.40x30.10mm
4	K20.01307	0735 320 816		2	TAKVİYE MASURA BİLYA	NEEDLE CAGE	75x83x23mm
5	K20.00233	1304 302 150		1	TAKVİYE DİŞLİSİ 30 DİŞ	CONSTANT GEAR 30 T	
6	K20.00234	1304 302 188	(1304 302 006)	2	TAKVİYE SENKROMENÇ	ENGAGING RING	
7	K20.00259	1304 304 680	(1304 304 496)	2	TAKVİYE SENK.FRENLEME	SYNCHRONIZING RING	
8	K20.00225	1304 202 202	(1304 202 260)	1	PRİZDİREK	INPUT SHAFT	
			(1304 302 404)				
9	K20.00471	1240 304 278		3	PRİZDİREK FİŞEĞİ	PRESSURE PIECE	
10	K20.00469	0732 040 385		3	PRİZDİREK YAYI	SPRING	
11	K20.00470	0732 040 386		3	PRİZDİREK YAYI	SPRING	
12	K20.01501	1304 302 440		1	PRİZDİREK YAĞ PİPETİ	OIL PIPET	
13	K20.01502	0630 502 063		1	PRİZDİREK YAĞ PİPET SEKMANI	RETAINING RING	58x2.00mm
14	K20.01010	0501 311 146		1	PRİZDİREK ARKA KEÇE	OIL SEAL	
15	K20.00244	1240 304 272	(1240 304 205)	1	TAKVİYE SENK.HALKA	ENGAGING SLEEVE	

Original parts names, oem numbers, symbols and descriptions used in this catalogue are for reference purposes only.

X1 - X2

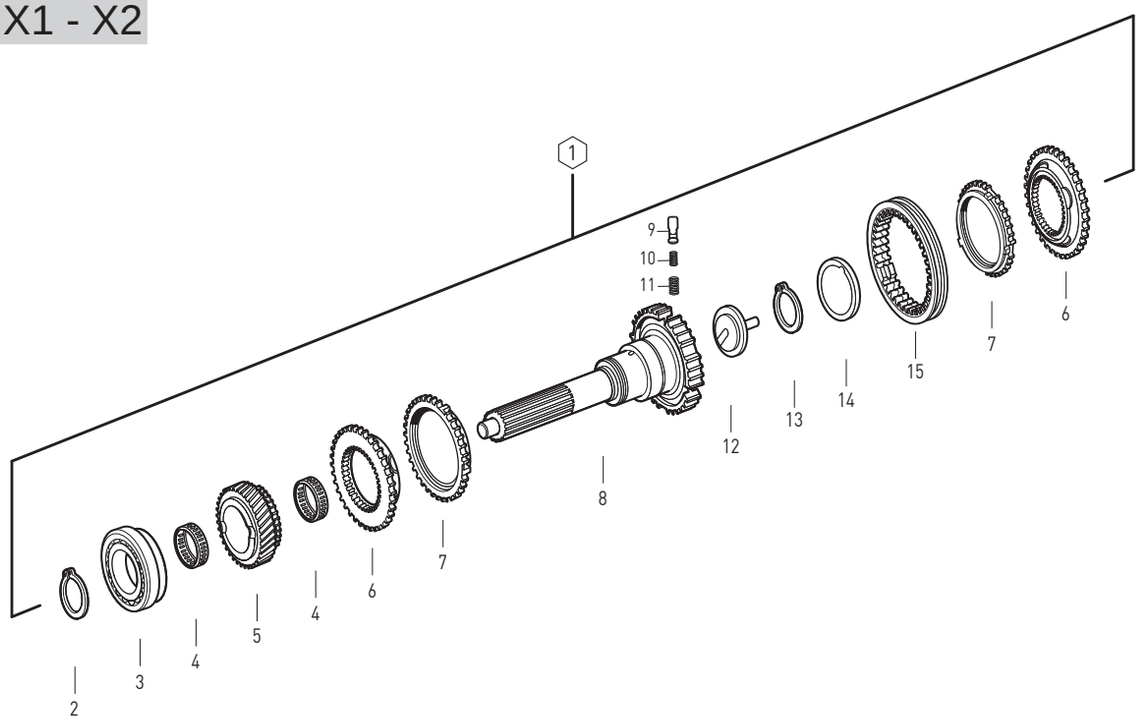

Fig.	Kacmaz No.	Oem No	Oem Old No	Pcs.	Ürün Tanımı	Description	Sizes
1	K20.01054	2001054		kit	PRİZDİREK KOMPLE	INPUT SHAFT COMPLETE	
2	K20.02192	0730 501 360		1	PRİZ.ÖN BİLYA SEKMANI	RETAINING RING	4.00mm
3	K20.01101	0750 117 079	(0735 370 233)	1	PRİZDİREK ÖN BİLYA	ROLLER BEARING	66.60x117.40x30.10mm
4	K20.01307	0735 320 816		2	TAKVİYE MASURA BİLYA	NEEDLE CAGE	75x83x23mm
5	K20.00232	1304 302 169	(1304 302 137)	1	TAKVİYE DİŞLİSİ 26 DİŞ	CONSTANT GEAR 26 T	
6	K20.00234	1304 302 188	(1304 302 006)	2	TAKVİYE SENKROMENÇ	ENGAGING RING	
7	K20.00259	1304 304 680	(1304 304 496)	2	TAKVİYE SENK.FRENLEME	SYNCHRONIZING RING	
8	K20.00224	1304 202 201	(1304 202 259)	1	PRİZDİREK	INPUT SHAFT	MAN-ASKAM-DAF
			(1304 302 403)				
9	K20.00471	1240 304 278		3	PRİZDİREK FİŞEĞİ	PRESSURE PIECE	
10	K20.00469	0732 040 385		3	PRİZDİREK YAYI	SPRING	
11	K20.00470	0732 040 386		3	PRİZDİREK YAYI	SPRING	
12	K20.01501	1304 302 440		1	PRİZDİREK YAĞ PİPETİ	OIL PIPET	
13	K20.01502	0630 502 063		1	PRİZDİREK YAĞ PİPET SEKMANI	RETAINING RING	58x2.00mm
14	K20.01010	0501 311 146		1	PRİZDİREK ARKA KEÇE	OIL SEAL	
15	K20.00244	1240 304 272	(1240 304 205)	1	TAKVİYE SENK.HALKA	ENGAGING SLEEVE	

Original parts names, oem numbers, symbols and descriptions used in this catalogue are for reference purposes only.

X3

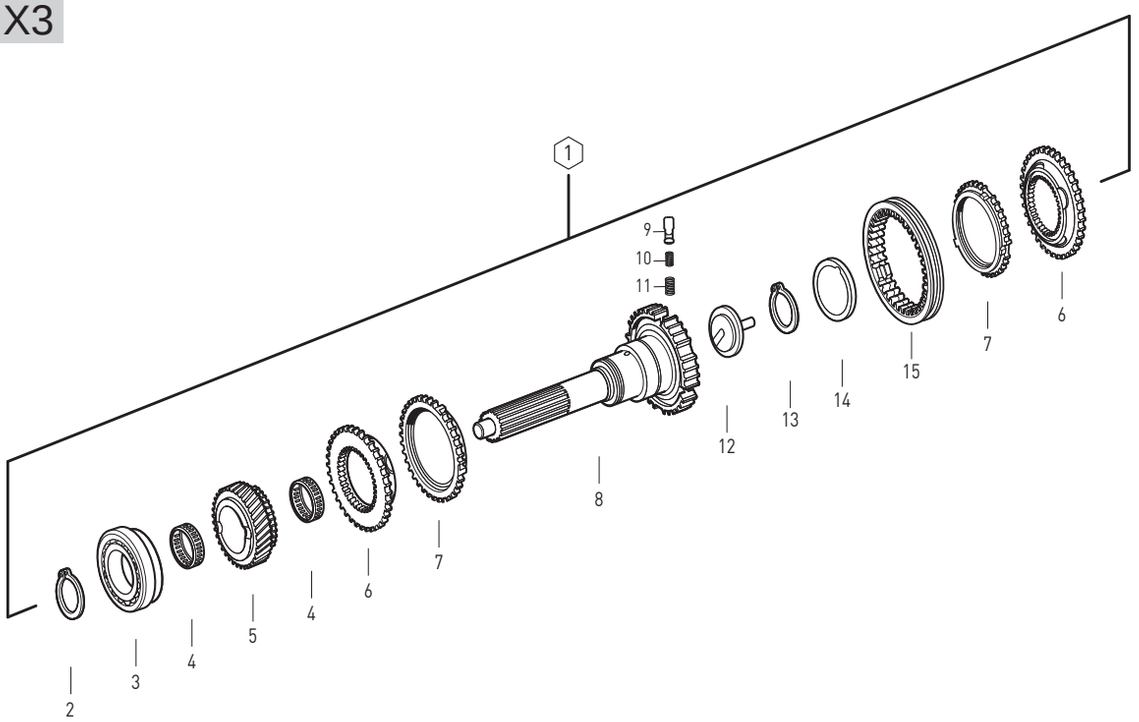

Fig.	Kacmaz No.	Oem No	Oem Old No	Pcs.	Ürün Tanımı	Description	Sizes
1	K20.01055	2001055		kit	PRİZDİREK KOMPLE	INPUT SHAFT COMPLETE	
2	K20.02192	0730 501 360		1	PRİZ.ÖN BİLYA SEKMANI	RETAINING RING	4.00mm
3	K20.01101	0750 117 079	(0735 370 233)	1	PRİZDİREK ÖN BİLYA	ROLLER BEARING	66.60x117.40x30.10mm
4	K20.01307	0735 320 816		2	TAKVİYE MASURA BİLYA	NEEDLE CAGE	75x83x23mm
5	K20.00233	1304 302 150		1	TAKVİYE DİŞLİSİ 30 DİŞ	CONSTANT GEAR 30 T	
6	K20.00234	1304 302 188	(1304 302 006)	2	TAKVİYE SENKROMENÇ	ENGAGING RING	
7	K20.00259	1304 304 680	(1304 304 496)	2	TAKVİYE SENK.FRENLEME	SYNCHRONIZING RING	
8	K20.00224	1304 202 201	(1304 202 259)	1	PRİZDİREK	INPUT SHAFT	MAN-ASKAM-DAF
			(1304 302 403)				
9	K20.00471	1240 304 278		3	PRİZDİREK FİŞEĞİ	PRESSURE PIECE	
10	K20.00469	0732 040 385		3	PRİZDİREK YAYI	SPRING	
11	K20.00470	0732 040 386		3	PRİZDİREK YAYI	SPRING	
12	K20.01501	1304 302 440		1	PRİZDİREK YAĞ PİPETİ	OIL PIPET	
13	K20.01502	0630 502 063		1	PRİZDİREK YAĞ PİPET SEKMANI	RETAINING RING	58x2.00mm
14	K20.01010	0501 311 146		1	PRİZDİREK ARKA KEÇE	OIL SEAL	
15	K20.00244	1240 304 272	(1240 304 205)	1	TAKVİYE SENK.HALKA	ENGAGING SLEEVE	

Original parts names, oem numbers, symbols and descriptions used in this catalogue are for reference purposes only.

X1 - X2

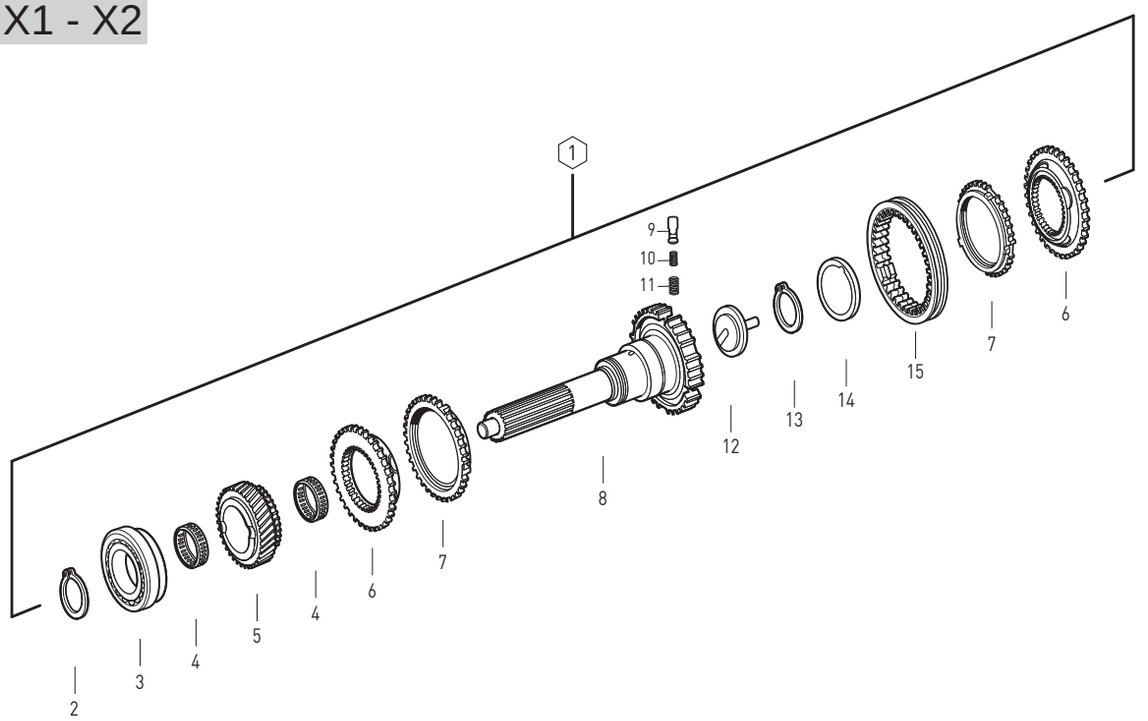

Fig.	Kacmaz No.	Oem No	Oem Old No	Pcs.	Ürün Tanımı	Description	Sizes
1	K20.01056	2001056		kit	PRİZDİREK KOMPLE	INPUT SHAFT	
2	K20.02192	0730 501 360		1	PRİZ.ÖN BİLYA SEKMANI	RETAINING RING	4.00mm
3	K20.01101	0750 117 079	(0735 370 233)	1	PRİZDİREK ÖN BİLYA	ROLLER BEARING	66.60x117.40x30.10mm
4	K20.01307	0735 320 816		2	TAKVİYE MASURA BİLYA	NEEDLE CAGE	75x83x23mm
5	K20.00232	1304 302 169	(1304 302 137)	1	TAKVİYE DİŞLİSİ 26 DİŞ	CONSTANT GEAR 26 T	
6	K20.00234	1304 302 188	(1304 302 006)	2	TAKVİYE SENKROMENÇ	ENGAGING RING	
7	K20.00259	1304 304 680	(1304 304 496)	2	TAKVİYE SENK.FRENLEME	SYNCHRONIZING RING	
8	K20.00226	1304 202 203	(1304 202 261)	1	PRİZDİREK	INPUT SHAFT	
			(1304 302 405)				
9	K20.00471	1240 304 278		3	PRİZDİREK FİŞEĞİ	PRESSURE PIECE	
10	K20.00469	0732 040 385		3	PRİZDİREK YAYI	SPRING	
11	K20.00470	0732 040 386		3	PRİZDİREK YAYI	SPRING	
12	K20.01501	1304 302 440		1	PRİZDİREK YAĞ PİPETİ	OIL PIPET	
13	K20.01502	0630 502 063		1	PRİZDİREK YAĞ PİPET SEKMANI	RETAINING RING	58x2.00mm
14	K20.01010	0501 311 146		1	PRİZDİREK ARKA KEÇE	OIL SEAL	
15	K20.00244	1240 304 272	(1240 304 205)	1	TAKVİYE SENK.HALKA	ENGAGING SLEEVE	

Original parts names, oem numbers, symbols and descriptions used in this catalogue are for reference purposes only.

X1 - X2

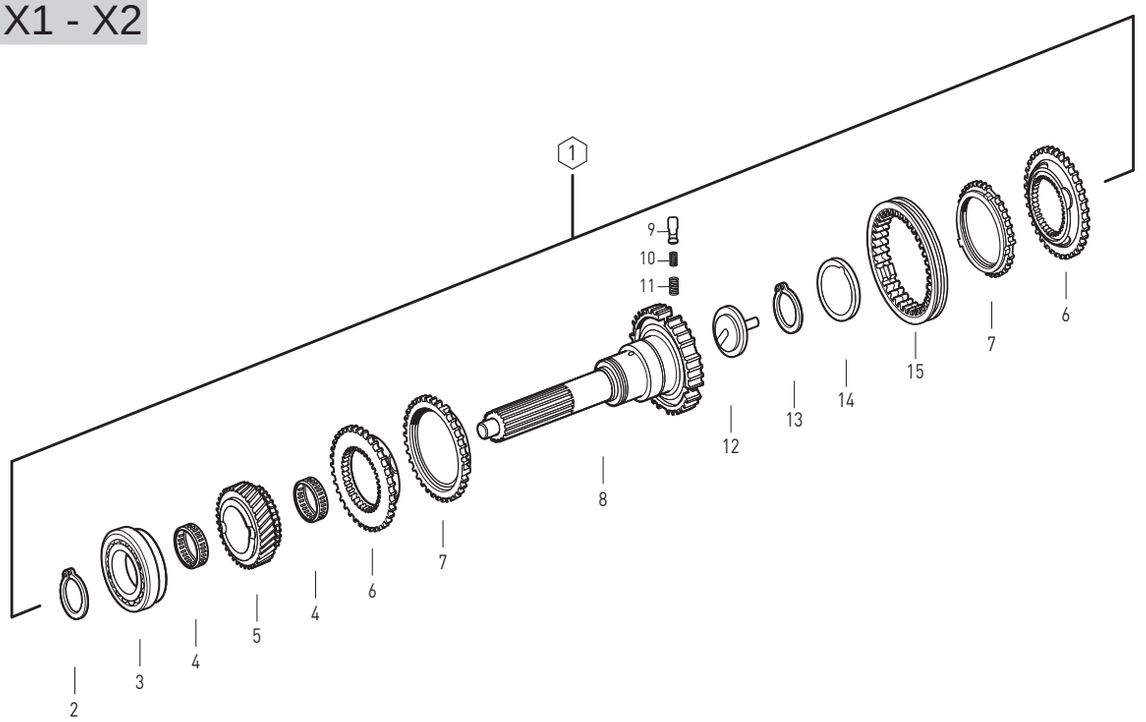

Fig.	Kacmaz No.	Oem No	Oem Old No	Pcs.	Ürün Tanımı	Description	Sizes
1	K20.01057	2001057		kit	PRİZDİREK KOMPLE	INPUT SHAFT COMPLETE	
2	K20.02192	0730 501 360		1	PRİZ.ÖN BİLYA SEKMANI	RETAINING RING	4.00mm
3	K20.01101	0750 117 079	(0735 370 233)	1	PRİZDİREK ÖN BİLYA	ROLLER BEARING	66.60x117.40x30.10mm
4	K20.01307	0735 320 816		2	TAKVİYE MASURA BİLYA	NEEDLE CAGE	75x83x23mm
5	K20.00232	1304 302 169	(1304 302 137)	1	TAKVİYE DİŞLİSİ 26 DİŞ	CONSTANT GEAR 26 T	
6	K20.00234	1304 302 188	(1304 302 006)	2	TAKVİYE SENKROMENÇ	ENGAGING RING	
7	K20.00259	1304 304 680	(1304 304 496)	2	TAKVİYE SENK.FRENLEME	SYNCHRONIZING RING	
8	K20.00330	1304 202 255	(1304 202 264)	1	PRİZDİREK	INPUT SHAFT	
			(1304 302 494)				
9	K20.00471	1240 304 278		3	PRİZDİREK FİŞEĞİ	PRESSURE PIECE	
10	K20.00469	0732 040 385		3	PRİZDİREK YAYI	SPRING	
11	K20.00470	0732 040 386		3	PRİZDİREK YAYI	SPRING	
12	K20.01501	1304 302 440		1	PRİZDİREK YAĞ PİPETİ	OIL PIPET	
13	K20.01502	0630 502 063		1	PRİZDİREK YAĞ PİPET SEKMANI	RETAINING RING	58x2.00mm
14	K20.01010	0501 311 146		1	PRİZDİREK ARKA KEÇE	OIL SEAL	
15	K20.00244	1240 304 272	(1240 304 205)	1	TAKVİYE SENK.HALKA	ENGAGING SLEEVE	

Original parts names, oem numbers, symbols and descriptions used in this catalogue are for reference purposes only.

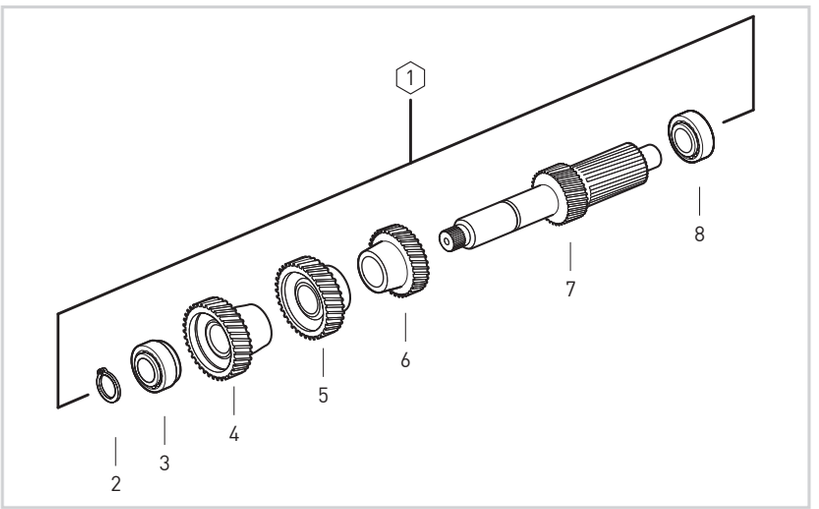

X1

Fig.	Kacmaz No.	Oem No	Oem Old No	Pcs.	Ürün Tanımı	Description	Sizes
1	K20.01990	2001990		kit	GRUP MİLİ KOMPLE	COUNTER SHAFT COMPLETE	
2		0630 531 050		1	GRUP MİLİ ÖN BİLYA SEKMANI	RETAINING RING	40x2.50mm
3	K20.01122	0735 371 749	(0750 118 511)	1	GRUP MİLİ ÖN BİLYA	ROLLER BEARING	40x80x32mm
4	K20.00235	1304 303 273		1	TAKVİYE DİŞLİ KARŞILIĞI 33 DİŞ	CONSTANT GEAR 33 T	
5	K20.00237	1304 303 212		1	4.VİTES DİŞLİ KARŞILIĞI 29 DİŞ	GEAR 4th 29 T	
6	K20.00239	1304 303 214		1	3.VİTES DİŞLİ KARŞILIĞI 22 DİŞ	GEAR 3rd 22 T	
7	K20.00242	1304 303 276		1	GRUP MİLİ	COUNTER SHAFT	
8	K20.01123	0750 117 083	(0750 120 067)	1	GRUP MİLİ ARKA BİLYA	ROLLER BEARING	50.80x95.20x27.70mm

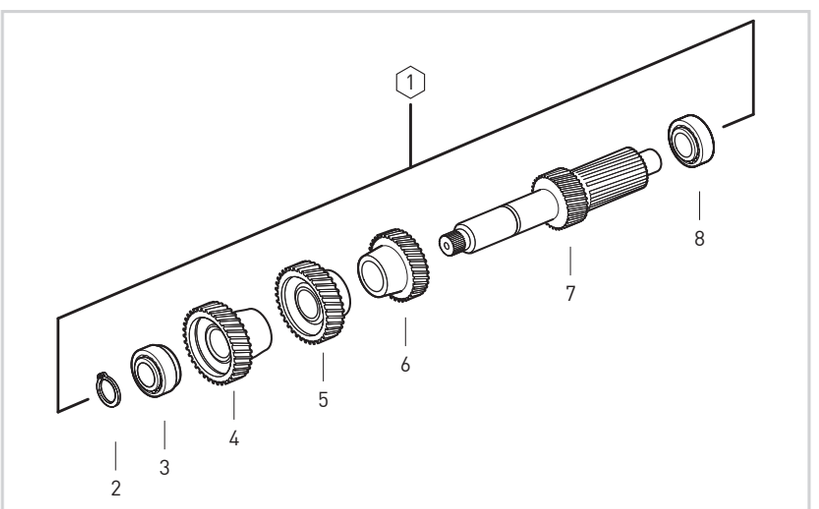

X2

Fig.	Kacmaz No.	Oem No	Oem Old No	Pcs.	Ürün Tanımı	Description	Sizes
1	K20.01991	2001991		kit	GRUP MİLİ KOMPLE	COUNTER SHAFT COMPLETE	
2		0630 531 050		1	GRUP MİLİ ÖN BİLYA SEKMANI	RETAINING RING	40x2.50mm
3	K20.01122	0735 371 749	(0750 118 511)	1	GRUP MİLİ ÖN BİLYA	ROLLER BEARING	40x80x32mm
4	K20.00235	1304 303 273		1	TAKVİYE DİŞLİ KARŞILIĞI 33 DİŞ	CONSTANT GEAR 33 T	
5	K20.00237	1304 303 212		1	4.VİTES DİŞLİ KARŞILIĞI 29 DİŞ	GEAR 4th 29 T	
6	K20.00239	1304 303 214		1	3.VİTES DİŞLİ KARŞILIĞI 22 DİŞ	GEAR 3rd 22 T	
7	K20.00241	1304 303 277		1	GRUP MİLİ 14/17 DİŞ	COUNTER SHAFT 14/17 T	
8	K20.01123	0750 117 083	(0750 120 067)	1	GRUP MİLİ ARKA BİLYA	ROLLER BEARING	50.80x95.20x27.70mm

Original parts names, oem numbers, symbols and descriptions used in this catalogue are for reference purposes only.

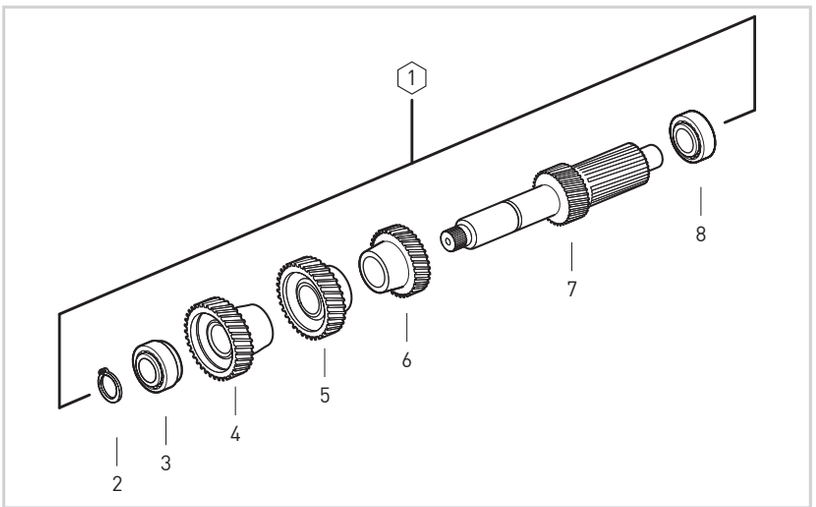

X3

Fig.	Kacmaz No.	Oem No	Oem Old No	Pcs.	Ürün Tanımı	Description	Sizes
1	K20.01992	2001992		kit	GRUP MİLİ KOMPLE	COUNTER SHAFT COMPLETE	
2		0630 531 050		1	GRUP MİLİ ÖN BİLYA SEKMANI	RETAINING RING	40x2.50mm
3	K20.01122	0735 371 749	(0750 118 511)	1	GRUP MİLİ ÖN BİLYA	ROLLER BEARING	40x80x32mm
4	K20.00236	1304 303 283		1	TAKVİYE DİŞLİ KARŞILIĞI 31 DİŞ	CONSTANT GEAR 31 T	
5	K20.00238	1304 303 175		1	4.VİTES DİŞLİ KARŞILIĞI 34 DİŞ	GEAR 4th 34 T	
6	K20.00240	1304 303 192		1	3.VİTES DİŞLİ KARŞILIĞI 28 DİŞ	GEAR 3rd 28 T	
7	K20.00243	1304 303 279		1	GRUP MİLİ 16/22 DİŞ	COUNTER SHAFT 16/22 T	
8	K20.01123	0750 117 083	(0750 120 067)	1	GRUP MİLİ ARKA BİLYA	ROLLER BEARING	50.80x95.20x27.70mm

Original parts names, oem numbers, symbols and descriptions used in this catalogue are for reference purposes only.

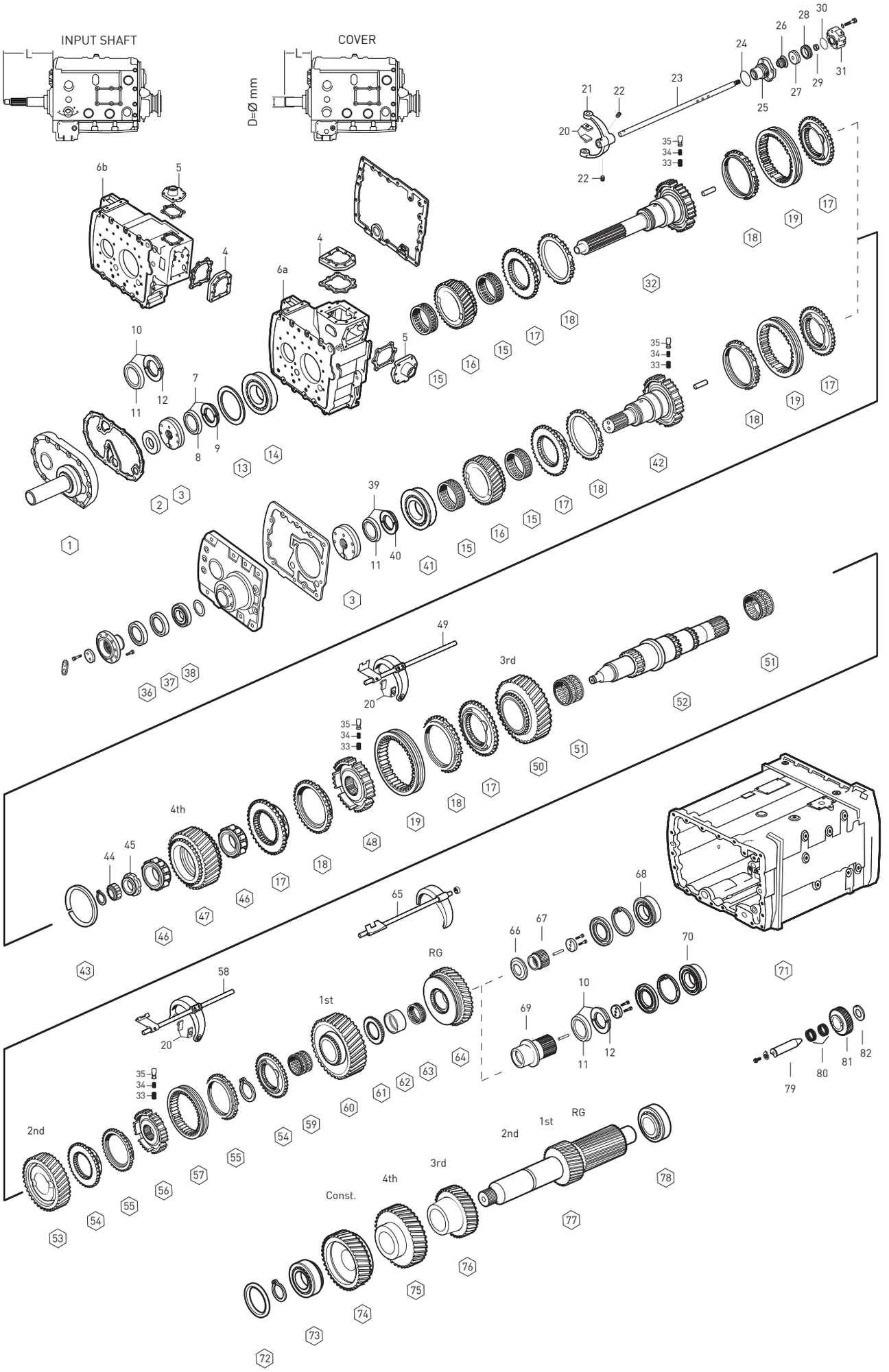

Original parts names, oem numbers, symbols and descriptions used in this catalogue are for reference purposes only.

Fig.	Kacmaz No.	Oem No	Oem Old No	Pcs.	Ürün Tanımı	Description	Sizes	Notes	SG 10.14-0.72	SG 11.46-0.85	DG 13.68-1.00	SG 14.29-0.82
1	K20.00594	1297 302 012		1	PRİZDİREK KEÇE KAPAĞI	COVER	L=170 D=54	ABCD			◆	
1	K20.00595	1297 302 013		1	PRİZDİREK KEÇE KAPAĞI	COVER	L=170 D=57	ABCDE		◆		◆
1	K20.00596	1297 302 015		1	PRİZDİREK KEÇE KAPAĞI	COVER	L=170 D=68	F	◆			
2	K20.01002	0750 111 002		1	PRİZDİREK KEÇESİ	OIL SEAL	48X75X8mm	ABCD (1)		◆	◆	◆
2	K20.01003	0734 310 387		1	PRİZDİREK KEÇESİ	OIL SEAL	55X75X8mm	EF (2)	◆			◆
3	K20.00484	1295 202 041		1	YAĞ POMPASI	OIL PUMP			◆	◆	◆	◆
4	K20.00561	1295 307 479		1	ŞANZIMAN KULE KAPAĞI	COVER			◆	◆	◆	◆
5	K20.00597	1295 307 434		1	ŞANZIMAN KULE KAPAĞI	COVER			◆	◆	◆	◆
6a		1295 301 293	(1295 301 134)	1	ŞANZIMAN ÖN GÖVDE	HOUSING				◆	◆	◆
6a		1295 301 289	(1295 301 131)	1	ŞANZIMAN ÖN GÖVDE	HOUSING				◆	◆	◆
6b		1296 301 205		1	ŞANZIMAN ÖN GÖVDE	HOUSING			◆			
6b		1296 301 206		1	ŞANZIMAN ÖN GÖVDE	HOUSING				◆		
6b		1296 301 219		1	ŞANZIMAN ÖN GÖVDE	HOUSING					◆	
6b		1296 301 200		1	ŞANZIMAN ÖN GÖVDE	HOUSING					◆	◆
7	K20.01541	1499 298 003		1	EMN.SACI VE P.KİLİT TAK.	SPLIT RING KIT	4.00mm	(3)	◆	◆	◆	◆
7	K20.01543	1499 298 002		1	EMN.SACI VE P.KİLİT TAK.	SPLIT RING KIT	3.90mm	(4)	◆	◆	◆	◆
7	K20.01545	1499 298 001		1	EMN.SACI VE P.KİLİT TAK.	SPLIT RING KIT	3.80mm	(5)	◆	◆	◆	◆
8	K20.01547	0730 062 579		1	KİLİT SEGMAN EMN.SACI	RETAINING RING			◆	◆	◆	◆
9	K20.01542	0730 105 156		2	PARÇALI KİLİT	SPLIT RING	4.00mm		◆	◆	◆	◆
9	K20.01544	0730 105 155		2	PARÇALI KİLİT	SPLIT RING	3.90mm		◆	◆	◆	◆
9	K20.01546	0730 105 154		2	PARÇALI KİLİT	SPLIT RING	3.80mm		◆	◆	◆	◆
10	K20.01638	1499 298 090		1	EMN.SACI VE P.KİLİT TAK.	SPLIT RING KIT	4.30mm	(6)	◆	◆	◆	◆
10	K20.01640	1499 298 114		1	EMN.SACI VE P.KİLİT TAK.	SPLIT RING KIT	4.20mm	(7)	◆	◆	◆	◆
10	K20.01642	1499 298 100		1	EMN.SACI VE P.KİLİT TAK.	SPLIT RING KIT	4.10mm	(8)	◆	◆	◆	◆
10	K20.01548	1499 298 098		1	EMN.SACI VE P.KİLİT TAK.	SPLIT RING KIT	4.00mm	(9)	◆	◆	◆	◆
10	K20.01550	1499 298 096		1	EMN.SACI VE P.KİLİT TAK.	SPLIT RING KIT	3.90mm	(10)	◆	◆	◆	◆
10	K20.01552	1499 298 094		1	EMN.SACI VE P.KİLİT TAK.	SPLIT RING KIT	3.80mm	(11)	◆	◆	◆	◆
11	K20.01554	0730 061 816		1	P. KİLİT EMNİYET SACI	RETAINING RING			◆	◆	◆	◆
12	K20.01639	0730 103 244		2	PARÇALI KİLİT	SPLIT RING	4.30mm		◆	◆	◆	◆
12	K20.01641	0730 104 337		2	PARÇALI KİLİT	SPLIT RING	4.20mm		◆	◆	◆	◆
12	K20.01643	0730 103 941		2	PARÇALI KİLİT	SPLIT RING	4.10mm		◆	◆	◆	◆
12	K20.01549	0730 103 939		2	PARÇALI KİLİT	SPLIT RING	4.00mm		◆	◆	◆	◆
12	K20.01551	0730 103 937		2	PARÇALI KİLİT	SPLIT RING	3.90mm		◆	◆	◆	◆
12	K20.01553	0730 103 935		2	PARÇALI KİLİT	SPLIT RING	3.80mm		◆	◆	◆	◆
13	K20.01644	0730 102 504		1	PRİZ.ÖN BİLYA RAYNELİ	SHIM	0.60mm		◆	◆	◆	◆
13	K20.01645	2001645		1	PRİZ.ÖN BİLYA RAYNELİ	SHIM	0.30mm		◆	◆	◆	◆
13	K20.01646	2001646		1	PRİZ.ÖN BİLYA RAYNELİ	SHIM	0.20mm		◆	◆	◆	◆
13	K20.01647	2001647		1	PRİZ.ÖN BİLYA RAYNELİ	SHIM	0.10mm		◆	◆	◆	◆
14	K20.01102	0750 118 130	(0750 118 131)	1	PRİZDİREK ÖN BİLYA	ROLLER BEARING	80X150X27.5mm		◆	◆	◆	◆
15	K20.01311	0735 320 786	(0735 320 584)	2	PRİZ. MASURA BİLYA	NEEDLE CAGE	88X96X24.5mm		◆	◆	◆	◆
16	K20.00008	1295 302 071	(1295 302 173)	1	TAKVİYE DİŞLİSİ 28 DİŞ	CONSTANT GEAR 28 T		ABCDFG	◆		◆	

NOTES :

ABCDEFG alfabetic letters are used in conjunction with the encoded parts.

(1) With Input Shaft 1295 202 007 - 1295 202 004 - 1295 202 008 - 1295 202 028
(2) With Input Shaft 1295 202 039 - 1295 202 045
(3) This kit includes (1499 298 003) = 2pcs 0730 105 156 + 1pcs 0730 062 579
(4) This kit includes (1499 298 002) = 2pcs 0730 105 155 + 1pcs 0730 062 579
(5) This kit includes (1499 298 001) = 2pcs 0730 105 154 + 1pcs 0730 062 579
(6) This kit includes (1499 298 090) = 2pcs 0730 103 244 + 1pcs 0730 061 816
(7) This kit includes (1499 298 114) = 2pcs 0730 104 337 + 1pcs 0730 061 816
(8) This kit includes (1499 298 100) = 2pcs 0730 103 941 + 1pcs 0730 061 816
(9) This kit includes (1499 298 098) = 2pcs 0730 103 939 + 1pcs 0730 061 816
(10) This kit includes (1499 298 096) = 2pcs 0730 103 937 + 1pcs 0730 061 816
(11) This kit includes (1499 298 094) = 2pcs 0730 103 935 + 1pcs 0730 061 816

NOTLAR :

ABCDEFG alfabetik harfler ile kodlananparçalar birlikte kullanılır.

(1) 1295 202 007 - 1295 202 004 - 1295 202 008 - 1295 202 028 Prizdireklerde kullanılır.
(2) 1295 202 039 - 1295 202 045 Prizdireklerde kullanılır.
(3) (1499 298 003) nolu kit bu parçalardan oluşur = 2pcs 0730 105 156 + 1pcs 0730 062 579
(4) (1499 298 002) nolu kit bu parçalardan oluşur = 2pcs 0730 105 155 + 1pcs 0730 062 579
(5) (1499 298 001) nolu kit bu parçalardan oluşur = 2pcs 0730 105 154 + 1pcs 0730 062 579
(6) (1499 298 090) nolu kit bu parçalardan oluşur = 2pcs 0730 103 244 + 1pcs 0730 061 816
(7) (1499 298 114) nolu kit bu parçalardan oluşur = 2pcs 0730 104 337 + 1pcs 0730 061 816
(8) (1499 298 100) nolu kit bu parçalardan oluşur = 2pcs 0730 103 941 + 1pcs 0730 061 816
(9) (1499 298 098) nolu kit bu parçalardan oluşur = 2pcs 0730 103 939 + 1pcs 0730 061 816
(10) (1499 298 096) nolu kit bu parçalardan oluşur = 2pcs 0730 103 937 + 1pcs 0730 061 816
(11) (1499 298 094) nolu kit bu parçalardan oluşur = 2pcs 0730 103 935 + 1pcs 0730 061 816

Original parts names, oem numbers, symbols and descriptions used in this catalogue are for reference purposes only.

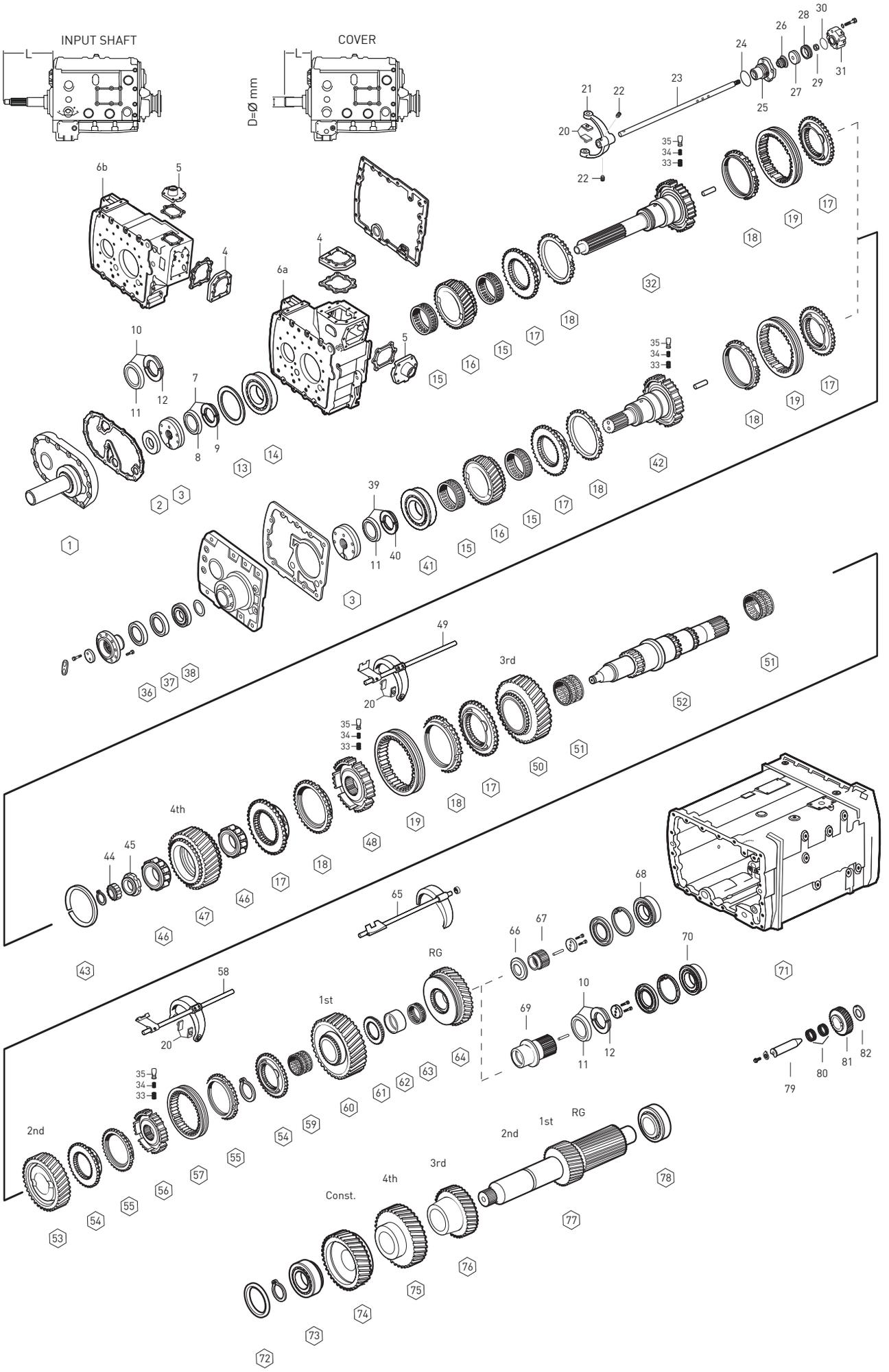

Original parts names, oem numbers, symbols and descriptions used in this catalogue are for reference purposes only.

Fig.	Kacmaz No.	Oem No	Oem Old No	Pcs.	Ürün Tanımı	Description	Sizes	Notes	SG 10.14-0.72	SG 11.46-0.85	DG 13.68-1.00	SG 14.29-0.82
16	K20.00009	1295 302 070	(1295 302 174)	1	TAKVİYE DİŞLİSİ 30 DİŞ	CONSTANT GEAR 30 T		ABCDG		◆		
16	K20.00010	1295 302 122	(1295 302 168)	1	TAKVİYE DİŞLİSİ 29 DİŞ	CONSTANT GEAR 29T		ABDEG				◆
17	K20.00019	1295 304 278		4	3./4.VİT.TAK.SENKROMENÇ	ENGAGING RING			◆	◆	◆	◆
17	K20.00304	1297 304 041		4	3./4.VİT.TAK.SENKROMENÇ	ENGAGING RING			◆	◆	◆	◆
18	K20.00021	1304 304 686	(1295 304 004)	4	3./4.VİT.TAK.FRENLEME	SYNCHRONIZING CONE			◆	◆	◆	◆
19	K20.00020	1295 304 002		2	3./4.VİT.TAK.SENK.HALKA	ENGAGING SLEEVE			◆	◆	◆	◆
20	K20.00186	1295 306 132		6	HİLAL PABUCU	SLIDING PAD			◆	◆	◆	◆
21		1313 312 002		1	TAKVİYE HİLALİ	G.SHIFT FORK			◆	◆	◆	◆
22	K20.01688	1315 312 047		2	TAKVİYE HİLAL VİDASI	SCREW	M12X1.0mm		◆	◆	◆	◆
23		1295 312 018		1	TAKVİYE HİLAL MİLİ	G.SHIFT RAIL			◆	◆	◆	◆
24		0634 313 671		1	TAKVİYE SİLİNDİR ORİNGİ	O-RING	80.0X3.0mm		◆	◆	◆	◆
25	K20.01738	1296 312 042	(1296 312 016)	1	TAKVİYE SİLİNDİR GÖVDESİ	CYLINDER			◆	◆	◆	◆
26	K20.01016	0750 112 034		1	TAKVİYE HİLAL MİL KEÇESİ	FLANGE PACKING	25.0X38.0X14.2mm		◆	◆	◆	◆
27		1296 312 053	(1296 312 047)	1	TAKVİYE HİLAL MİL PİSTONU	PISTON			◆	◆	◆	◆
28	K20.01021	0750 112 089		1	TAKVİYE HAVA KEÇESİ	DOUBLE PACKING	53.0X63.0X16.2mm		◆	◆	◆	◆
29	K20.01774	0737 006 095		1	TAKVİYE HİLAL MİL SOMUNU	NUT	M16X1.5mm		◆	◆	◆	◆
30		0634 314 018		1	TAKVİYE SİLİNDİR ORİNGİ	O-RING	59.0X2.0mm		◆	◆	◆	◆
31		0750 132 033		1	TAKVİYE VENTİLİ	5/2 WAY VALVE			◆	◆	◆	◆
32	K20.00001	1295 202 004	(1295 302 086)	1	PRİZDİREK	INPUT SHAFT	L=286 SAE 1 3/4	A		◆	◆	◆
32	K20.00002	1295 202 007	(1295 302 089)	1	PRİZDİREK	INPUT SHAFT	L=295 SAE 1 3/4	B		◆	◆	◆
32	K20.00562	1295 202 008	(1295 302 092)	1	PRİZDİREK	INPUT SHAFT	L=315 SAE 2	C	◆	◆		
32	K20.00565	1295 202 028	(1295 302 158)	1	PRİZDİREK	INPUT SHAFT	L=320 SAE 2	D		◆	◆	◆
32	K20.00003	1295 202 039		1	PRİZDİREK	INPUT SHAFT	L=286 SAE 2	E				◆
32	K20.00033	1295 202 045		1	PRİZDİREK	INPUT SHAFT	L=286 SAE 2	F	◆			
33	K20.00469	0732 040 385		9	PRİZ.ve YILDIZ DİŞLİ YAYI	SPRING			◆	◆	◆	◆
34	K20.00470	0732 040 386		9	PRİZ.ve YILDIZ DİŞLİ YAYI	SPRING			◆	◆	◆	◆
35	K20.00471	1240 304 278		9	PRİZ.veYILDIZ DİŞLİ FİŞEĞİ	PRESSURE PIECE			◆	◆	◆	◆
36	K20.01005	0734 300 140		1	PRİZDİREK KEÇESİ	OIL SEAL	70X90X10mm	G		◆	◆	◆
37	K20.01006	0634 310 648		1	PRİZDİREK KEÇESİ	OIL SEAL	70X90X10mm	G		◆	◆	◆
38	K20.01131	0750 117 651		1	ŞANZIMAN KAPAK BİLYASI	ROLLER BEARING	50X90X24.7mm	G		◆	◆	◆
39	K20.01555	1499 298 129		1	EMN.SACI VE P. KİLİT TAK.	SIPLIT RING KIT	4.00mm	G (12)		◆	◆	◆
39	K20.01557	1499 298 127		1	EMN.SACI VE P. KİLİT TAK.	SIPLIT RING KIT	3.90mm	G (13)		◆	◆	◆
39	K20.01559	1499 298 125		1	EMN.SACI VE P. KİLİT TAK.	SIPLIT RING KIT	3.80mm	G (14)		◆	◆	◆
40	K20.01556	0730 106 162		2	PARÇALI KİLİT	SIPLIT RING	4.00mm	G		◆	◆	◆
40	K20.01558	0730 106 160		2	PARÇALI KİLİT	SIPLIT RING	3.90mm	G		◆	◆	◆
40	K20.01560	0730 106 158		2	PARÇALI KİLİT	SIPLIT RING	3.80mm	G		◆	◆	◆
41	K20.01103	0750 117 431		1	PRİZDİREK ÖN BİLYA	ROLLER BEARING	75X150X30.5mm	G		◆	◆	◆
42	K20.00342	1295 202 036		1	PRİZDİREK (Kısa Tip)	INPUT SHAFT (Short Type)		G		◆	◆	◆
43	K20.01518	0730 003 518		1	SENKROMENÇ AYAR SEKMANI	RING	6.30mm		◆	◆	◆	◆
43	K20.01519	0730 003 517		1	SENKROMENÇ AYAR SEKMANI	RING	6.00mm		◆	◆	◆	◆
43	K20.01520	0730 003 161		1	SENKROMENÇ AYAR SEKMANI	RING	5.10mm		◆	◆	◆	◆

NOTES :

ABCDEFG alfabetic letters are used in conjunction with the encoded parts.

(12) This kit includes (1499 298 129) = 2pcs 0730 106 162 + 1pcs 0730 061 816
(13) This kit includes (1499 298 127) = 2pcs 0730 106 160 + 1pcs 0730 061 816
(14) This kit includes (1499 298 125) = 2pcs 0730 106 158 + 1pcs 0730 061 816

NOTLAR :

ABCDEFG alfabetik harfler ile kodlananparçalar birlikte kullanılır.

(12) (1499 298 129) nolu kit bu parçalardan oluşur = 2pcs 0730 106 162 + 1pcs 0730 061 816
(13) (1499 298 127) nolu kit bu parçalardan oluşur = 2pcs 0730 106 160 + 1pcs 0730 061 816
(14) (1499 298 125) nolu kit bu parçalardan oluşur = 2pcs 0730 106 158 + 1pcs 0730 061 816

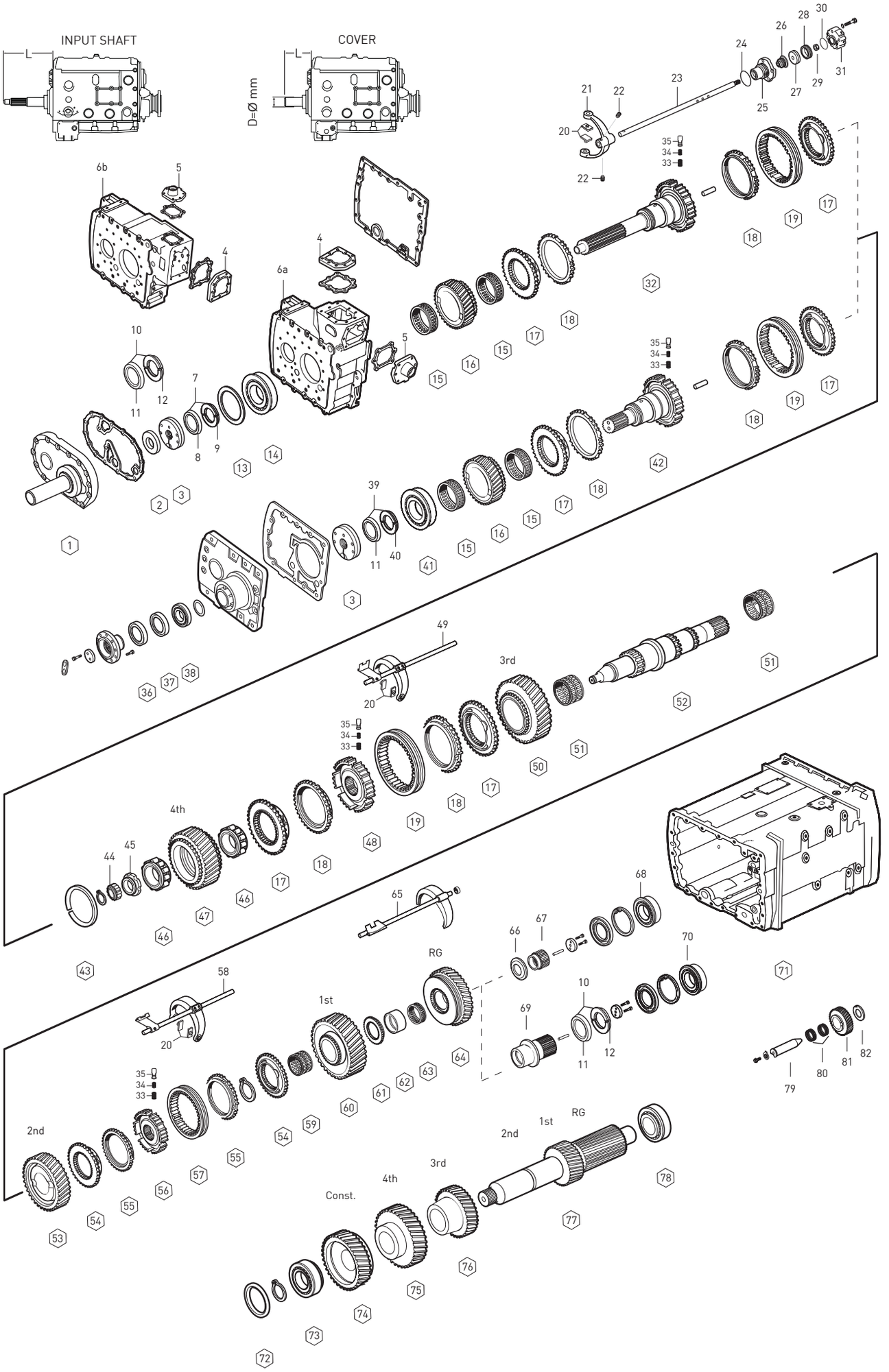

Original parts names, oem numbers, symbols and descriptions used in this catalogue are for reference purposes only.

Fig.	Kacmaz No.	Oem No	Oem Old No	Pcs.	Ürün Tanımı	Description	Sizes	Notes	SG 10.14-0.72	SG 11.46-0.85	DG 13.68-1.00	SG 14.29-0.82
43	K20.01521	0730 003 159		1	SENKROMENÇ AYAR SEKMANI	RING	4.50mm		◆	◆	◆	◆
43	K20.01522	0730 004 237		1	SENKROMENÇ AYAR SEKMANI	RING	4.00mm		◆	◆	◆	◆
44	K20.01107	0750 118 010		1	KAMALI MİL UÇ BİLYA	ROLLER BEARING	30X60X25.5mm		◆	◆	◆	◆
45	K20.00485	0737 502 092		1	KAMALI MİL UÇ SOMUNU	NUT	M60X1.5mm		◆	◆	◆	◆
46	K20.01110	0750 118 005		2	4.VİTES DİŞLİ BİLYASI	ROLLER BEARING	63X97.5X34.8mm		◆	◆	◆	◆
47	K20.00026	1295 304 135	(1295 304 322)	1	4.VİTES DİŞLİSİ 30 DİŞ	GEAR 4th 30 T		ABCDFG	◆		◆	
47	K20.00027	1295 304 136		1	4.VİTES DİŞLİSİ 28 DİŞ	GEAR 4th 28 T		ABCDG		◆		
47	K20.00028	1295 304 236		1	4.VİTES DİŞLİSİ 26 DİŞ	GEAR 4th 26 T		ABDEG				◆
48	K20.00025	1297 304 031		1	3./4.VİT.TAK.YILDIZ DİŞLİ	GUIDE SLEEVE			◆	◆	◆	◆
49		1295 206 221	(1295 206 172)	1	3./4.VİTES HİLALİ	GEAR SHIT FORK 3rd/4th		ABDEFG	◆			◆
49		1295 206 213	(1295 206 065)	1	3./4.VİTES HİLALİ	GEAR SHIT FORK 3rd/4th		ABCDG		◆	◆	
49		1295 206 219	(1295 206 097)	1	3./4.VİTES HİLALİ	GEAR SHIT FORK 3rd/4th		ABCDG			◆	
50	K20.00024	1295 304 128	(1295 304 324)	1	3.VİTES DİŞLİSİ 34 DİŞ	GEAR 3rd 34 T		ABCDG			◆	
50	K20.00023	1295 304 127		1	3.VİTES DİŞLİSİ 32 DİŞ	GEAR 3rd 32 T		ABCDEG		◆		◆
50	K20.00022	1295 304 269		1	3.VİTES DİŞLİSİ 25 DİŞ	GEAR 3rd 25 T		F	◆			
51	K20.01312	0735 320 418		2	2./3.VİT.MASURA BİLYA	NEEDLE CAGE	82X90X50mm	ABCDEG	◆	◆	◆	◆
51	K20.01313	0735 320 451		1	2.VİT.MASURA BİLYA	NEEDLE CAGE	82X90X60mm	F	◆			
52	K20.00343	1295 304 273		1	KAMALI MİL	MAIN SHAFT		F	◆			
52	K20.00344	1295 304 245		1	KAMALI MİL	MAIN SHAFT		ABCDG		◆	◆	
52	K20.00345	1295 304 250		1	KAMALI MİL	MAIN SHAFT		ABDEG				◆
53	K20.00029	1295 304 271		1	2.VİTES DİŞLİSİ 34 DİŞ	GEAR 2nd 34 T		F	◆			
53	K20.00030	1295 304 120		1	2.VİTES DİŞLİSİ 37 DİŞ	GEAR 2nd 37 T		ABCDEG		◆		◆
53	K20.00031	1295 304 121		1	2.VİTES DİŞLİSİ 38 DİŞ	GEAR 2nd 38 T		ABCDG			◆	
54	K20.00032	1297 304 196		2	1./ 2.VİT.SENKROMENÇ	ENGAGING RING			◆	◆	◆	◆
55	K20.00346	1296 304 135	(1246 304 278)	2	1./ 2.VİT.SENK.FRENLEME	SYNCHRONIZING CONE			◆	◆	◆	◆
56	K20.00071	1297 304 195		1	1./ 2.VİT.YILDIZ DİŞLİ	GUIDE SLEEVE			◆	◆	◆	◆
57	K20.00034	1257 304 020	(1250 304 160)	1	1./ 2.VİT.SENK.HALKA	ENGAGING SLEEVE			◆	◆	◆	◆
58		1295 206 222	(1295 206 195)	1	1./2.VİTES HİLALİ	GEAR SHIT FORK 1st/2nd		F	◆			
58		1295 206 214	(1295 206 071)	1	1./2.VİTES HİLALİ	GEAR SHIT FORK 1st/2nd		ABCDG		◆	◆	
58		1295 206 223	(1295 206 192)	1	1./2.VİTES HİLALİ	GEAR SHIT FORK 1st/2nd		ABCDG			◆	
58		1295 206 220	(1295 206 171)	1	1./2.VİTES HİLALİ	GEAR SHIT FORK 1st/2nd		ABDEG				◆
59	K20.01314	0735 320 496		1	1.VİTES MASURA BİLYA	NEEDLE CAGE	70X78X55mm	ABCDEG		◆	◆	◆
59	K20.01315	0735 320 548		1	1.VİTES MASURA BİLYA	NEEDLE CAGE	70X78X46mm	F	◆			
60	K20.00347	1295 304 270		1	1.VİTES DİŞLİSİ 41 DİŞ	GEAR 1st 41 T		F	◆			
60	K20.00348	1295 304 203	(1295 304 123)	1	1.VİTES DİŞLİSİ 44 DİŞ	GEAR 1st 44 T		ABCDEG		◆		◆
60	K20.00349	1295 304 202		1	1.VİTES DİŞLİSİ 47 DİŞ	GEAR 1st 47 T		ABCDG			◆	
61	K20.00350	1295 304 024		1	GERİ VİTES YILDIZ DİŞLİ	GUIDE SLEEVE		F	◆			
61	K20.00351	1295 304 206		1	GERİ VİTES YILDIZ DİŞLİ	GUIDE SLEEVE		ABCDEG		◆	◆	◆
62	K20.00352	1295 304 012		1	GERİ VİT.MAS.BİL.ÇANAĞI	BEARING RACE			◆	◆	◆	
63	K20.01316	0750 115 059		1	GERİ VİTES MASURA BİLYA	NEEDLE CAGE	75X83X40mm		◆	◆	◆	◆
64	K20.00354	1295 304 272		1	GERİ VİTES DİŞLİSİ 39 DİŞ	REVERSE GEAR 39 T		F	◆			

NOTES :

ABCDEFG alfabetic letters are used in conjunction with the encoded parts.

NOTLAR :

ABCDEFG alfabetik harfler ile kodlananparçalar birlikte kullanılır.

Original parts names, oem numbers, symbols and descriptions used in this catalogue are for reference purposes only.

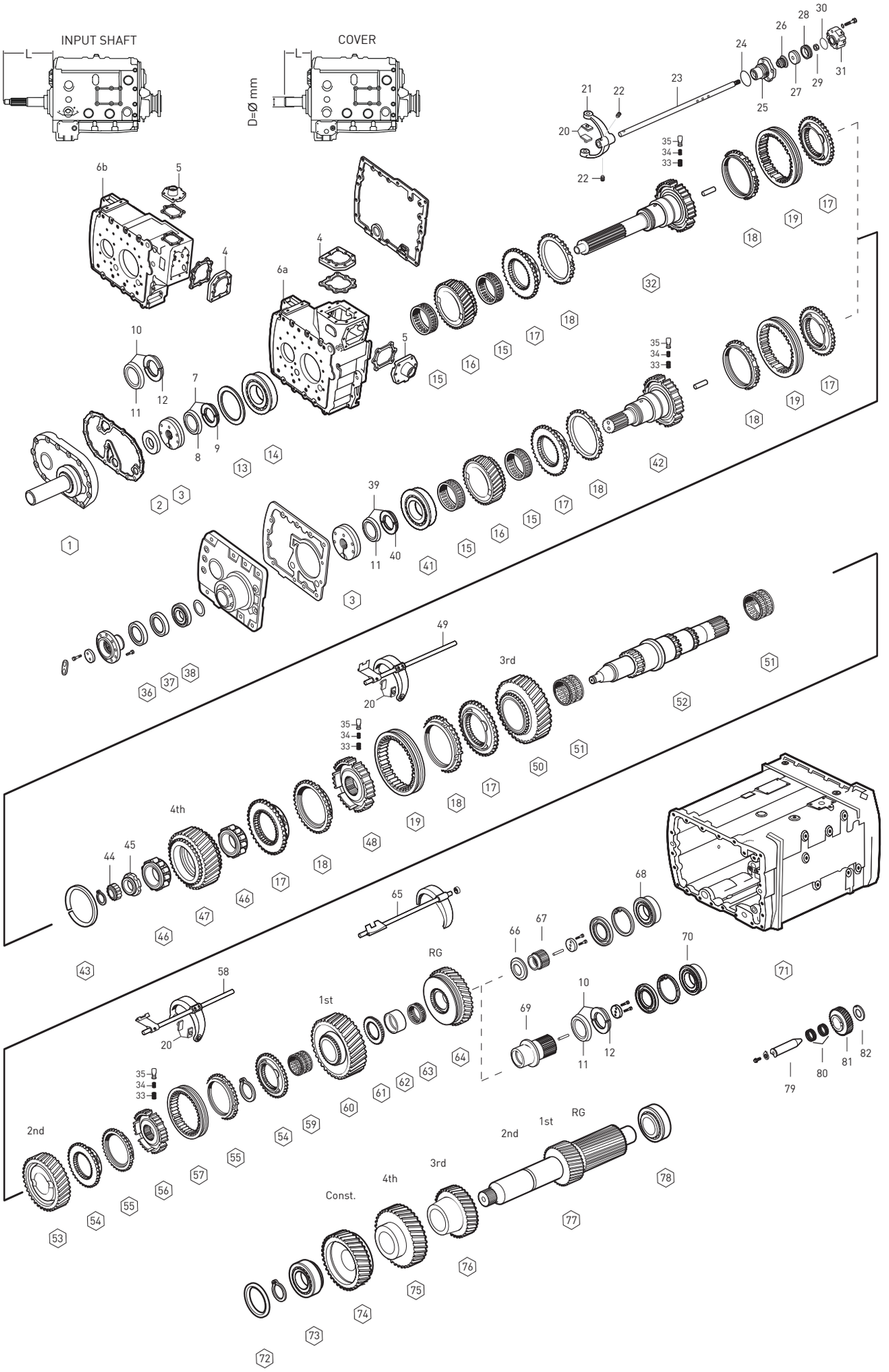

Original parts names, oem numbers, symbols and descriptions used in this catalogue are for reference purposes only.

Fig.	Kacmaz No.	Oem No	Oem Old No	Pcs.	Ürün Tanımı	Description	Sizes	Notes	SG 10.14-0.72	SG 11.46-0.85	DG 13.68-1.00	SG 14.29-0.82
64	K20.00355	1295 304 201		1	GERİ VİTES DİŞLİSİ 39 DİŞ	REVERSE GEAR 39 T		ABCDEG		◆		◆
64	K20.00356	1295 304 200		1	GERİ VİTES DİŞLİSİ 38 DİŞ	REVERSE GEAR 38 T		ABCDG			◆	
65		1295 206 251		1	GERİ VİTES HİLALİ	GEAR SHIT FORK/RG		F	◆			
65		1295 206 255		1	GERİ VİTES HİLALİ	GEAR SHIT FORK/RG		ABCDG		◆	◆	
65		1295 206 257		1	GERİ VİTES HİLALİ	GEAR SHIT FORK/RG		ABCDEG				◆
66	K20.01525	1295 304 240		1	GERİ VİTES DİŞLİ PULU	THRUST WASHER		ABCDFG	◆	◆	◆	
67	K20.00036	1295 304 248		1	GÜNEŞ DİŞLİ 27 DİŞ	SUN GEAR 27 T		ABCDFG	◆	◆	◆	
68	K20.01114	0750 118 153		1	GÜNEŞ DİŞLİ BİLYASI	ROLLER BEARING	60X130X31mm	ABCDFG	◆	◆	◆	
69	K20.00037	1295 304 251		1	GÜNEŞ DİŞLİ 24 DİŞ	SUN GEAR 24 T		ABDEG				◆
70	K20.01115	0750 118 137		1	GÜNEŞ DİŞLİ BİLYASI	ROLLER BEARING	80X140X26mm	ABDEG				◆
71		1295 301 315		1	ŞANZIMAN ORTA GÖVDE	HOUSING			◆			
71		1295 301 309		1	ŞANZIMAN ORTA GÖVDE	HOUSING				◆	◆	
71		1295 301 312		1	ŞANZIMAN ORTA GÖVDE	HOUSING					◆	◆
71		1295 301 311		1	ŞANZIMAN ORTA GÖVDE	HOUSING				◆	◆	◆
72	K20.01648	0730 102 099		1	GRUP MİLİ ÖN BİLYA RAYNELİ	SHIM	3.00mm		◆	◆	◆	◆
72	K20.01649	0730 102 060		1	GRUP MİLİ ÖN BİLYA RAYNELİ	SHIM	2.60mm		◆	◆	◆	◆
72	K20.01650	0730 102 068		1	GRUP MİLİ ÖN BİLYA RAYNELİ	SHIM	2.20mm		◆	◆	◆	◆
72	K20.01651	0730 102 075		1	GRUP MİLİ ÖN BİLYA RAYNELİ	SHIM	1.85mm		◆	◆	◆	◆
72	K20.01652	2001652		1	GRUP MİLİ ÖN BİLYA RAYNELİ	SHIM	0.30mm		◆	◆	◆	◆
72	K20.01653	2001653		1	GRUP MİLİ ÖN BİLYA RAYNELİ	SHIM	0.20mm		◆	◆	◆	◆
72	K20.01654	2001654		1	GRUP MİLİ ÖN BİLYA RAYNELİ	SHIM	0.10mm		◆	◆	◆	◆
73	K20.01124	0750 117 010	(0750 117 030)	1	GRUP MİLİ ÖN BİLYA	ROLLER BEARING	50.8X100X35mm		◆	◆	◆	◆
74	K20.00011	1295 303 101	(1295 303 037)	1	OVARD.DİŞLİ KARŞ.34 DİŞ	CONSTANT GEAR 34 T		ABCDFG	◆		◆	
74	K20.00012	1295 303 036		1	OVARD.DİŞLİ KARŞ.31 DİŞ	CONSTANT GEAR 31 T		ABCDG		◆		
74	K20.00013	1295 303 060		1	OVARD.DİŞLİ KARŞ.32 DİŞ	CONSTANT GEAR 32 T		ABDEG				◆
75	K20.00035	1295 303 103	(1295 303 027)	1	4.VİTES DİŞLİ KARŞ.31 DİŞ	GEAR 4th 31 T		ABCDFG	◆		◆	
75	K20.00014	1295 303 028		1	4.VİTES DİŞLİ KARŞ.34 DİŞ	GEAR 4th 34 T		ABCDG		◆		
75	K20.00015	1295 303 094	(1295 303 061)	1	4.VİTES DİŞLİ KARŞ.35 DİŞ	GEAR 4th 35 T		ABDEG				◆
76	K20.00016	1295 303 071		1	3.VİTES DİŞLİ KARŞ.36 DİŞ	GEAR 3rd 36 T		F	◆			
76	K20.00017	1295 303 025		1	3.VİTES DİŞLİ KARŞ.28 DİŞ	GEAR 3rd 28 T		ABCDEG		◆		◆
76	K20.00018	1295 303 026	(1295 303 105)	1	3.VİTES DİŞLİ KARŞ.25 DİŞ	GEAR 3rd 25 T		ABCDG			◆	
77	K20.00358	1295 303 072		1	GRUP MİLİ	COUNTER SHAFT		ABCDFG	◆		◆	
77	K20.00357	1295 303 067	(1295 303 054)	1	GRUP MİLİ 19-23 DİŞ	COUNTER SHAFT 19-23 T		ABCDEG		◆		◆
77	K20.00359	1295 303 066	(1295 303 053)	1	GRUP MİLİ 17-20 DİŞ	COUNTER SHAFT 17-20 T		ABCDG			◆	
78	K20.01125	0750 117 008		1	GRUP MİLİ ARKA BİLYA	ROLLER BEARING	50X110X42.2mm		◆	◆	◆	◆
79	K20.00598	1295 305 056	(1295 305 008)	1	KÜÇÜK GERİ VİTES PİMİ	PIN			◆	◆	◆	◆
80	K20.01335	0750 115 011	(0735 320 042)	2	KÜÇÜK GERİ VİT.MAS.BİLYA	NEEDLE CAGE	40.0X60.0X26.0mm		◆	◆	◆	◆
81	K20.00599	1297 305 003		1	KÜÇÜK GERİ VİTES	REV.IDLER GEAR		F	◆			
81	K20.00600	1295 305 052		1	KÜÇÜK GERİ VİTES	REV.IDLER GEAR		ABCDG			◆	
81	K20.00601	1295 305 051		1	KÜÇÜK GERİ VİTES	REV.IDLER GEAR		ABCDEG		◆		◆
82	K20.01655	0730 150 064		1	KÜÇÜK GERİ VİTES PULU	THRUST WASHER			◆	◆	◆	◆

NOTES :

ABCDEFG alfabetic letters are used in conjunction with the encoded parts.

NOTLAR :

ABCDEFG alfabetik harfler ile kodlananparçalar birlikte kullanılır.

Original parts names, oem numbers, symbols and descriptions used in this catalogue are for reference purposes only.

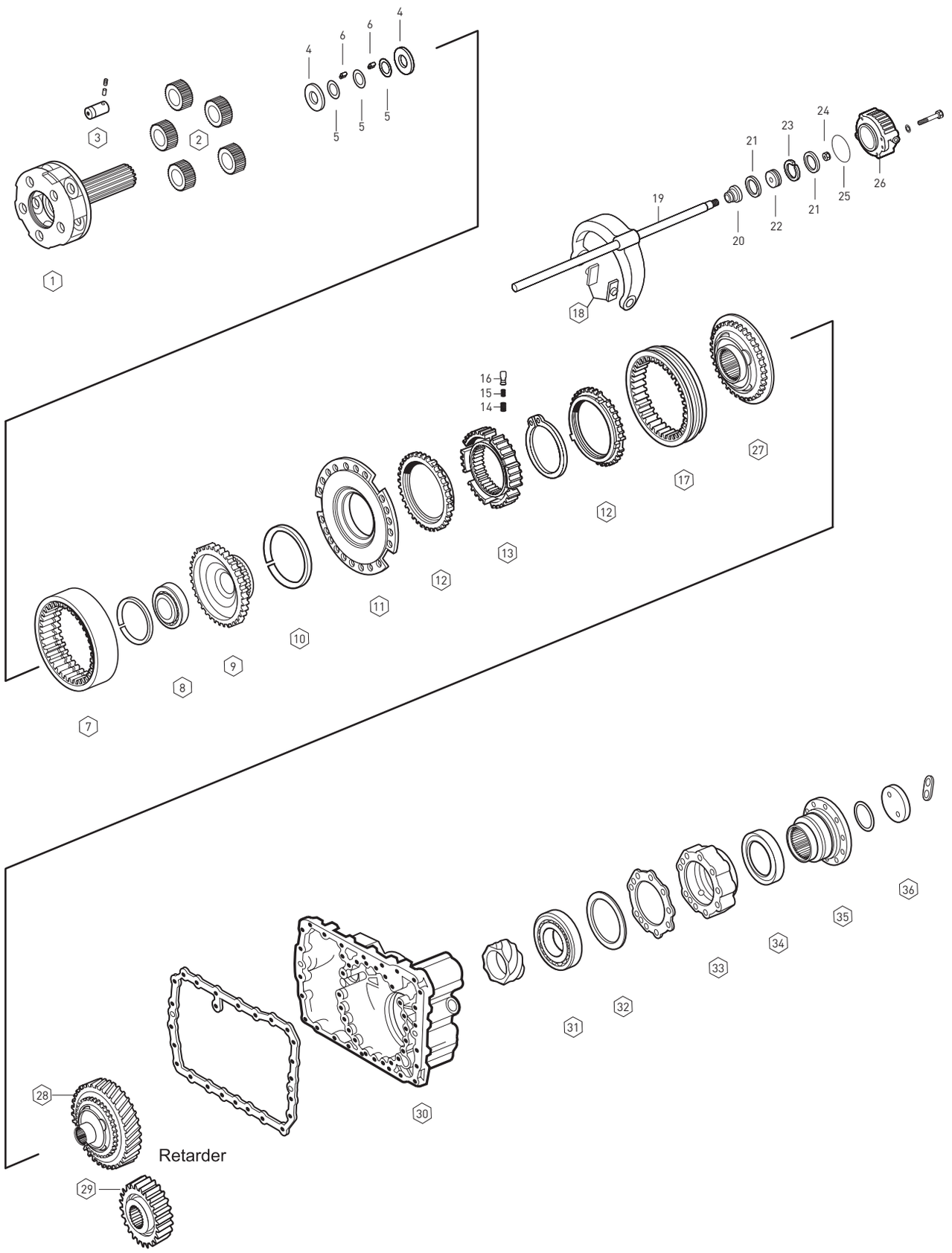

Original parts names, oem numbers, symbols and descriptions used in this catalogue are for reference purposes only.

Fig.	Kacmaz No.	Oem No	Oem Old No	Pcs.	Ürün Tanımı	Description	Sizes	Notes	SG 10.14-0.72	SG 11.46-0.85	DG 13.68-1.00	SG 14.29-0.82
1	K20.00602	1295 232 044	(1295 232 048)	1	ŞANZIMAN HEYKELİ	PLANETARY CARRIER		A	◆	◆	◆	
			(1295 232 028)									
1	K20.00603	1297 232 045	(1297 232 024)	1	ŞANZIMAN HEYKELİ	PLANETARY CARRIER		B				◆
			(1297 232 026)									
2	K20.00360	1295 232 027	(1295 332 016)	5	HEYKEL KOZA DİŞLİ TAKIMI	PLANETARY GEAR SET		A	◆	◆	◆	
2	K20.00417	1297 232 024	(1297 332 028)	5	HEYKEL KOZA DİŞLİ TAKIMI	PLANETARY GEAR SET		B				◆
3	K20.00361	1269 332 036		5	HEYKEL KOZA DİŞLİ PİMİ	PLANET SHAFT		A	◆	◆	◆	
3	K20.00418	1297 332 109	(1297 332 005)	5	HEYKEL KOZA DİŞLİ PİMİ	PLANET SHAFT		B				◆
4	K20.01510	0501 305 887		10	HEYKEL KOZA DİŞLİ PULU	THRUST WASHER		A	◆	◆	◆	
4	K20.01511	0501 306 212		10	HEYKEL KOZA DİŞLİ PULU	THRUST WASHER		B				◆
5	K20.01512	0730 103 846		15	HEYKEL KOZA DİŞLİ PULU	THRUST WASHER		AB	◆	◆	◆	◆
6	K20.01452	0735 470 057		180	HEYKEL KOZA DİŞ.TANE BİL.	NEEDLE ROLLER	6X14.8mm	A	◆	◆	◆	
6	K20.01453	0750 119 143	(0750 119 109)	120	HEYKEL KOZA DİŞ.TANE BİL.	NEEDLE ROLLER	10X16.8mm	B				◆
7	K20.00604	1295 332 053	(1295 332 028)	1	ÇEMBER DİŞLİ 83 DİŞ	RING WHEEL 83 T		A	◆	◆	◆	
7	K20.00605	1295 332 086		1	ÇEMBER DİŞLİ 86 DİŞ	RING WHEEL 86 T		B				◆
8	K20.01132	0750 116 166	(0635 338 048)	1	PLANET ÇAN DİŞLİ BİLYASI	ROLLER BEARING	75X105X16mm	A	◆	◆	◆	
8	K20.01133	0750 116 165	(0635 338 049)	1	PLANET ÇAN DİŞLİ BİLYASI	ROLLER BEARING	80X110X16mm	B				◆
9	K20.00606	1295 332 021		1	PLANET ÇAN DİŞLİ 83 DİŞ	CARRIER HUB 83 T		A	◆	◆	◆	
9	K20.00607	1297 332 035		1	PLANET ÇAN DİŞLİ 86 DİŞ	CARRIER HUB 86 T		B				◆
10	K20.01656	0730 505 056	(0730 505 055)	1	ÇEMBER DİŞLİ SEGMANI	SPRING RING	3.20mm		◆	◆	◆	◆
11	K20.00007	1296 233 006		1	TEPSİ SENKROMENÇ	FLANGE			◆	◆	◆	◆
12	K20.00038	1296 333 045	(1296 333 022)	2	AĞIR SERİ SENK.FRENLEME	SYNCHRONIZING CONE			◆	◆	◆	◆
13	K20.00363	1296 333 002		1	AĞIR SERİ YILDIZ DİŞLİ	GUIDE SLEEVE			◆	◆	◆	◆
14	K20.00469	0732 040 385		9	AĞIR SERİ YILDIZ DİŞLİ YAYI	SPRING			◆	◆	◆	◆
15	K20.00470	0732 040 386		9	AĞIR SERİ YILDIZ DİŞLİ YAYI	SPRING			◆	◆	◆	◆
16	K20.00471	1240 304 278		9	AĞIR SERİ YILDIZ DİŞ.FİŞEĞİ	PRESSURE PIECE			◆	◆	◆	◆
17	K20.00039	1296 333 023	(0769 186 286)	1	AĞIR SERİ SENK.HALKA	ENGAGING SLEEVE			◆	◆	◆	◆
18	K20.00341	1296 334 004		2	AĞIR SERİ HİLAL PABUCU	SLIDING PAD			◆	◆	◆	◆
19		1312 234 002		1	AĞIR SERİ HİLALİ	GEAR SHIFT FORK			◆	◆	◆	◆
20	K20.01016	0750 112 034		1	AĞIR SERİ HİLAL MİL KEÇESİ	FLANGE PACKING	25.0X38.0X14.2mm		◆	◆	◆	◆
21	K20.01024	0734 317 150	(0750 112 019)	2	AĞIR SERİ HAVA KEÇESİ	SEALING RING	80.0X90.0X4.8mm		◆	◆	◆	◆
22		1296 334 039		1	AĞIR SERİ HİLAL MİL PİSTONU	PISTON			◆	◆	◆	◆
23	K20.01657	0750 112 066		1	AĞIR SERİ HİLAL MİL FİBERİ	GUIDE RING			◆	◆	◆	◆
24	K20.01774	0737 006 095		1	AĞIR SERİ HİLAL MİL SOMUNU	NUT	M16X1.5mm		◆	◆	◆	◆
25		0634 314 019		1	AĞIR SERİ SİLİNDİR ORİNGİ	O-RING	94.0X3.0mm		◆	◆	◆	◆
26	K20.00845	1295 334 075		1	AĞIR SERİ SİLİNDİR GÖVDESİ	CYLINDER			◆	◆	◆	◆
27	K20.00005	1295 233 025		1	SERİ SENKROMENÇ	ENGAGING RING	36spl.	A	◆	◆	◆	
27	K20.00006	1313 233 001	(1297 233 018)	1	SERİ SENKROMENÇ	ENGAGING RING	38spl.	B				◆
28	K20.00608	1297 333 117		1	AĞIR SERİ SENKROMENÇ	ENGAGING RING	Retarder				◆	
29	K20.00609	1297 313 231		1	RETARDER DİŞLİSİ	GEAR	Retarder				◆	
30		1296 301 133		1	ŞANZIMAN ARKA GÖVDE	HOUSING			◆	◆	◆	◆

NOTES :

A : Alphabetical letters used in conjunction with these products are classified.
B : Alphabetical letters used in conjunction with these products are classified.

NOTLAR :

A : Alfabetik harf ile sınıflandırılan ürünler, birlikte kullanılır.
B : Alfabetik harf ile sınıflandırılan ürünler, birlikte kullanılır.

Original parts names, oem numbers, symbols and descriptions used in this catalogue are for reference purposes only.

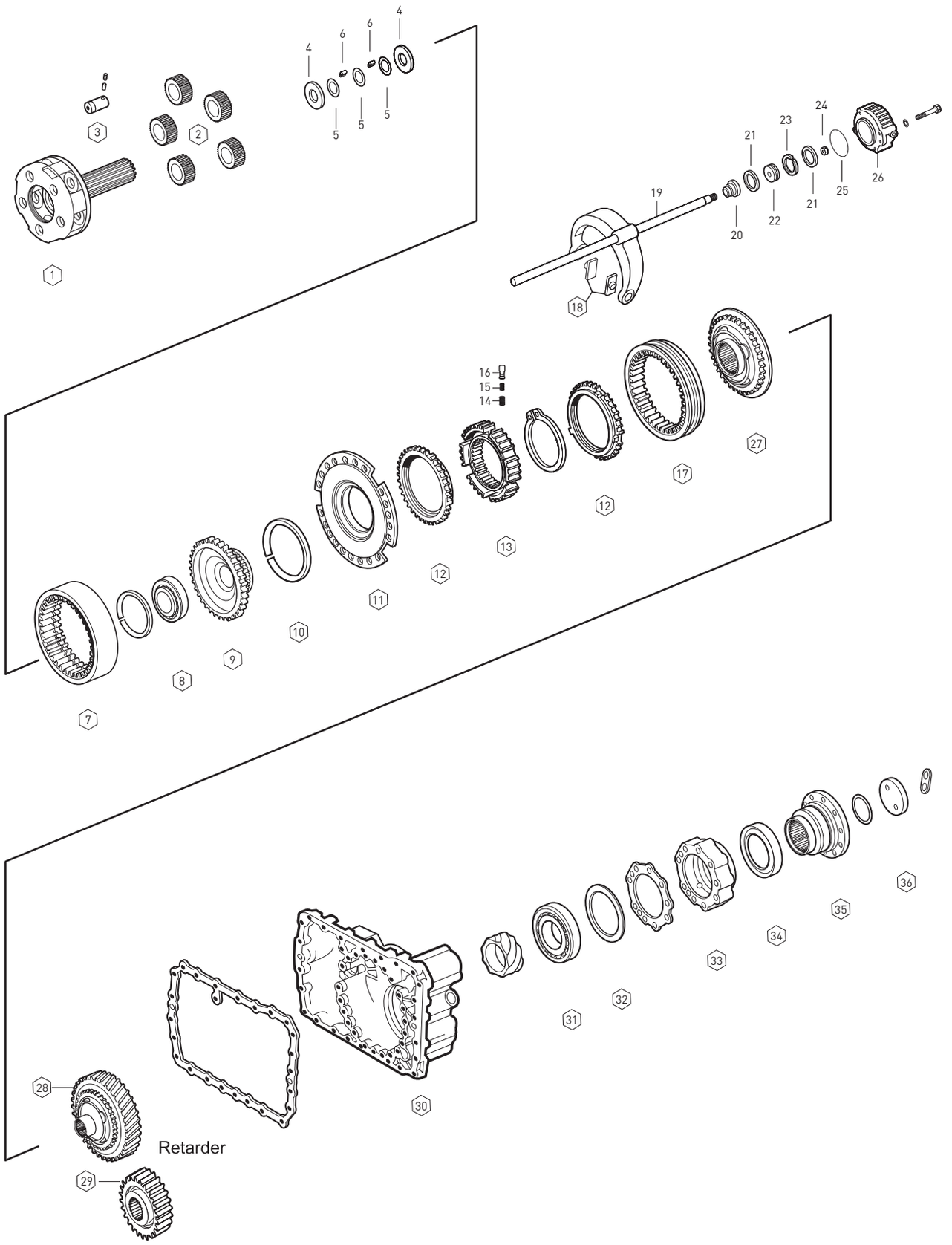

Original parts names, oem numbers, symbols and descriptions used in this catalogue are for reference purposes only.

Fig.	Kacmaz No.	Oem No	Oem Old No	Pcs.	Ürün Tanımı	Description	Sizes	Notes	SG 10.14-0.72	SG 11.46-0.85	DG 13.68-1.00	SG 14.29-0.82
31	K20.01134	0750 116 394	(0750 116 002)	1	ŞANZIMAN KUTU BİLYASI	ROLLER BEARING	90X160X30mm		◆	◆	◆	◆
32	K20.01658	0730 100 115		1	ŞANZ.ARKA BİLYA RAYNELİ	SHIM	0.30mm		◆	◆	◆	◆
32	K20.01659	0730 100 116		1	ŞANZ.ARKA BİLYA RAYNELİ	SHIM	0.20mm		◆	◆	◆	◆
32	K20.01660	2001660		1	ŞANZ.ARKA BİLYA RAYNELİ	SHIM	0.10mm		◆	◆	◆	◆
33		1295 231 001		1	ŞANZ.ARKA BİLYA KAPAĞI	BEARING COVER			◆	◆	◆	◆
34	K20.01013	0750 111 341		1	ŞANZ.ARKA KAPAK KEÇESİ	OIL SEAL	105.0X130.0X12mm		◆	◆	◆	◆
35	K20.00367	1295 338 017		1	ŞANZIMAN FLANŞI	COMPANIONFLANGE	8-H,Ø180mm	A	◆			
35	K20.00369	1295 338 014		1	ŞANZIMAN FLANŞI	COMPANIONFLANGE	10-H,Ø180mm	A		◆	◆	
35	K20.00371	1297 338 010		1	ŞANZIMAN FLANŞI	COMPANIONFLANGE	10-H,Ø180mm	B				◆
36	K20.01661	1295 332 051		1	ŞANZIMAN FLANŞ PULU	WASHER			◆	◆	◆	◆

NOTES :

A : Alphabetical letters used in conjunction with these products are classified.

B : Alphabetical letters used in conjunction with these products are classified.

NOTLAR :

A : Alfabetik harf ile sınıflandırılan ürünler, birlikte kullanılır.

B : Alfabetik harf ile sınıflandırılan ürünler, birlikte kullanılır.

SYNCHRONIZER KIT CONST.

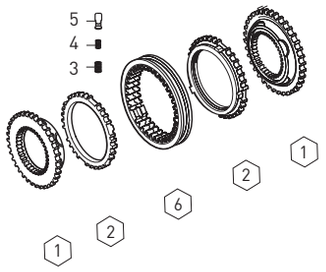

Fig.	Kacmaz No.	Oem No	Oem Old No	Pcs.	Ürün Tanımı	Description
	K20.00486	1295 298 936		Kit	TAKVİYE SENKROMENÇ KİT	SYNCHRONIZER KIT Const
1	K20.00019	1295 304 278		2	TAKVİYE SENKROMENÇ	ENGAGING RING
2	K20.00021	1304 304 686	(1295 304 004)	2	TAKVİYE SENK.FRENLEME	SYNCHRONIZING CONE
3	K20.00469	0732 040 385		3	TAKVİYE YILDIZ DİŞLİ YAYI	SPRING
4	K20.00470	0732 040 386		3	TAKVİYE YILDIZ DİŞLİ YAYI	SPRING
5	K20.00471	1240 304 278		3	TAK.YILDIZ DİŞLİ FİŞEĞİ	PRESSURE PIECE
6	K20.00020	1295 304 002		1	TAKVİYE SENK.HALKA	ENGAGING SLEEVE

SYNCHRONIZER KIT Const./3rd-4th

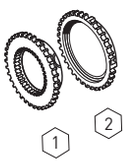

Fig.	Kacmaz No.	Oem No	Oem Old No	Pcs.	Ürün Tanımı	Description
	K20.00487	1297 204 062		Kit	TAK./3-4.VİTES SENK.KİT	SYNCH.KIT Const./3rd-4th
1	K20.00019	1295 304 278		1	TAK./3-4.VİT.SENKROMENÇ	ENGAGING RING
2	K20.00021	1304 304 686	(1295 304 004)	1	TAK./3-4.VİT.SENK.FREN.	SYNCHRONIZING CONE

SYNCHRONIZER KIT 3rd/4th

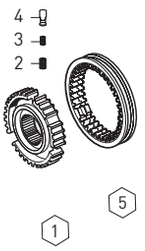

Fig.	Kacmaz No.	Oem No	Oem Old No	Pcs.	Ürün Tanımı	Description
	K20.00488	1297 204 030		Kit	3./4.VİT.HALKA YILDIZ KİTİ	SYNCH.KIT 3rd/4th
1	K20.00025	1297 304 031		1	3./4.VİT.YILDIZ DİŞLİ	GUIDE SLEEVE
2	K20.00469	0732 040 385		3	3./4.VİT.YILDIZ DİŞLİ YAYI	SPRING
3	K20.00470	0732 040 386		3	3./4.VİT.YILDIZ DİŞLİ YAYI	SPRING
4	K20.00471	1240 304 278		3	3./4.VİT.YILDIZ DİŞLİ FİŞEĞİ	PRESSURE PIECE
5	K20.00020	1295 304 002		1	3./4.VİT.SENK.HALKA	ENGAGING SLEEVE

SYNCHRONIZER KIT 3rd/4th

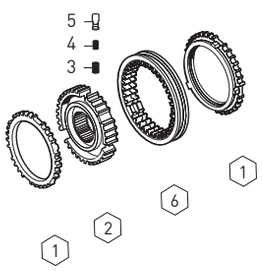

Fig.	Kacmaz No.	Oem No	Oem Old No	Pcs.	Ürün Tanımı	Description
	K20.00489	1297 204 059		Kit	3./4.VİT.SENKROMENÇ KİT	SYNCH.KIT 3rd/4th
1	K20.00021	1304 304 686	(1295 304 004)	2	3./4.VİT.FRENLEME	SYNCH.CONE
2	K20.00025	1297 304 031		1	3./4.VİT.YILDIZ DİŞLİ	GUIDE SLEEVE
3	K20.00469	0732 040 385		3	3./4.VİT.YILDIZ DİŞLİ YAYI	SPRING
4	K20.00470	0732 040 386		3	3./4.VİT.YILDIZ DİŞLİ YAYI	SPRING
5	K20.00471	1240 304 278		3	3./4.VİT.YILDIZ DİŞLİ FİŞEĞİ	PRESSURE PIECE
6	K20.00020	1295 304 002		1	3./4.VİT.SENK.HALKA	ENGAGING SLEEVE

SYNCHRONIZER KIT 3rd/4th

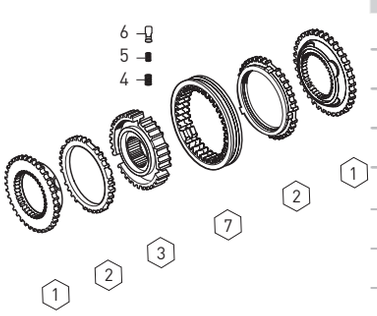

Fig.	Kacmaz No.	Oem No	Oem Old No	Pcs.	Ürün Tanımı	Description
	K20.00490	1297 298 958		Kit	3./4.VİT.SENKROMENÇ KİT	SYNCH.KIT 3rd/4th
1	K20.00019	1295 304 278		2	3./4.VİT.SENKROMENÇ	ENGAGING RING
2	K20.00021	1304 304 686	(1295 304 004)	2	3./4.VİT.FRENLEME	SYNCH.CONE
3	K20.00025	1297 304 031		1	3./4.VİT.YILDIZ DİŞLİ	GUIDE SLEEVE
4	K20.00469	0732 040 385		3	3./4.VİT.YILDIZ DİŞLİ YAYI	SPRING
5	K20.00470	0732 040 386		3	3./4.VİT.YILDIZ DİŞLİ YAYI	SPRING
6	K20.00471	1240 304 278		3	3./4.VİT.YILDIZ DİŞLİ FİŞEĞİ	PRESSURE PIECE
7	K20.00020	1295 304 002		1	3./4.VİT.SENK.HALKA	ENGAGING SLEEVE

Original parts names, oem numbers, symbols and descriptions used in this catalogue are for reference purposes only.

Fig.	Kacmaz No.	Oem No	Oem Old No	Pcs.	Ürün Tanımı	Description
	K20.00491	1297 204 072		Kit	1./2.VİT.SENKROMENÇ KİT	SYNCH.KIT 1st/2nd
1	K20.00032	1297 304 196		1	1./2.VİT.SENKROMENÇ	ENGAGING RING
2	K20.00346	1296 304 135	(1246 304 278)	1	1./2.VİT.SENK.FRENLEME	SYNCHRONIZING CONE

SYNCHRONIZER KIT 1st/2nd

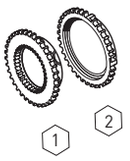

Fig.	Kacmaz No.	Oem No	Oem Old No	Pcs.	Ürün Tanımı	Description
	K20.00492	1297 204 031		Kit	1./2.VİT.HALKA YILDIZ KİTİ	SYNCH.KIT 1st/2nd
1	K20.00071	1297 304 195		1	1./2.VİT.YILDIZ DİŞLİ	GUIDE SLEEVE
2	K20.00469	0732 040 385		3	1./2.VİT.YILDIZ DİŞLİ YAYI	SPRING
3	K20.00470	0732 040 386		3	1./2.VİT.YILDIZ DİŞLİ YAYI	SPRING
4	K20.00471	1240 304 278		3	1./2.VİT.YILDIZ DİŞLİ FİŞEĞİ	PRESSURE PIECE
5	K20.00034	1257 304 020	(1250 304 160)	1	1./2.VİT.SENK.HALKA	ENGAGING SLEEVE

SYNCHRONIZER KIT 1st/2nd

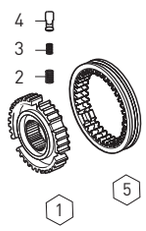

Fig.	Kacmaz No.	Oem No	Oem Old No	Pcs.	Ürün Tanımı	Description
	K20.00493	1297 204 019		Kit	1./2.VİT.SENKROMENÇ KİT	SYNCH.KIT 1st/2nd
1	K20.00346	1296 304 135	(1246 304 278)	2	1./2.VİT.FRENLEME	SYNCH.CONE
2	K20.00071	1297 304 195		1	1./2.VİT.YILDIZ DİŞLİ	GUIDE SLEEVE
3	K20.00469	0732 040 385		3	1./2.VİT.YILDIZ DİŞLİ YAYI	SPRING
4	K20.00470	0732 040 386		3	1./2.VİT.YILDIZ DİŞLİ YAYI	SPRING
5	K20.00471	1240 304 278		3	1./2.VİT.YILDIZ DİŞLİ FİŞEĞİ	PRESSURE PIECE
6	K20.00034	1257 304 020	(1250 304 160)	1	1./2.VİT.SENK.HALKA	ENGAGING SLEEVE

SYNCHRONIZER KIT 1st/2nd

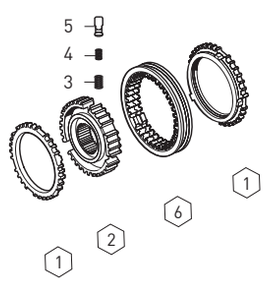

Fig.	Kacmaz No.	Oem No	Oem Old No	Pcs.	Ürün Tanımı	Description
	K20.00494	1297 298 956		Kit	1./2.VİT.SENKROMENÇ KİT	SYNCH.KIT 1st/2nd
1	K20.00032	1297 304 196		2	1./2.VİT.SENKROMENÇ	ENGAGING RING
2	K20.00346	1296 304 135	(1246 304 278)	2	1./2.VİT.FRENLEME	SYNCH.CONE
3	K20.00071	1297 304 195		1	1./2.VİT.YILDIZ DİŞLİ	GUIDE SLEEVE
4	K20.00469	0732 040 385		3	1./2.VİT.YILDIZ DİŞLİ YAYI	SPRING
5	K20.00470	0732 040 386		3	1./2.VİT.YILDIZ DİŞLİ YAYI	SPRING
6	K20.00471	1240 304 278		3	1./2.VİT.YILDIZ DİŞLİ FİŞEĞİ	PRESSURE PIECE
7	K20.00034	1257 304 020	(1250 304 160)	1	1./2.VİT.SENK.HALKA	ENGAGING SLEEVE

SYNCHRONIZER KIT 1st/2nd

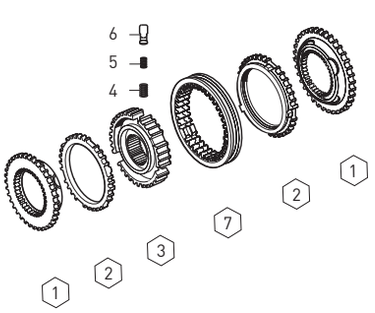

Fig.	Kacmaz No.	Oem No	Oem Old No	Pcs.	Ürün Tanımı	Description
	K20.00496	1295 298 938		Kit	AĞIR SERİ SENK.KİT	SYNCHRONIZER KIT
1	K20.00007	1296 233 006		1	TEPSİ SENKROMENÇ	FLANGE
2	K20.00038	1296 333 045	(1296 333 022)	2	AĞIR SERİ FRENLEME	SYNCHRONIZING CONE
3	K20.00469	0732 040 385		9	AĞIR SERİ YILDIZ DİŞLİ YAYI	SPRING
4	K20.00470	0732 040 386		9	AĞIR SERİ YILDIZ DİŞLİ YAYI	SPRING
5	K20.00471	1240 304 278		9	AĞIR SERİ YILDIZ DİŞ.FİŞEĞİ	PRESSURE PIECE
6	K20.00005	1295 233 025		1	SERİ SENKROMENÇ	ENGAGING RING

SYNCHRONIZER KIT PLANETARY

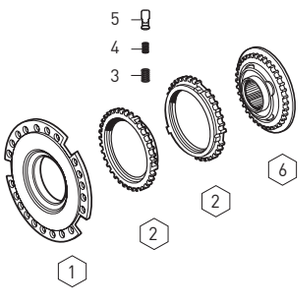

Original parts names, oem numbers, symbols and descriptions used in this catalogue are for reference purposes only.

SYNCHRONIZER KIT PLANETARY

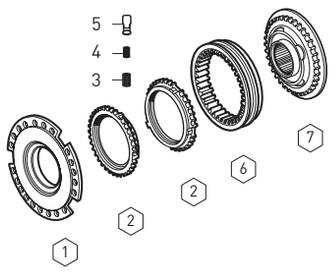

Fig.	Kacmaz No.	Oem No	Oem Old No	Pcs.	Ürün Tanımı	Description
	K20.00497	1295 298 937		Kit	AĞIR SERİ SENK.KİT	SYNCHRONIZER KIT
1	K20.00007	1296 233 006		1	TEPSİ SENKROMENÇ	FLANGE
2	K20.00038	1296 333 045	(1296 333 022)	2	AĞIR SERİ FRENLEME	SYNCHRONIZING CONE
3	K20.00469	0732 040 385		9	AĞIR SERİ YILDIZ DİŞLİ YAYI	SPRING
4	K20.00470	0732 040 386		9	AĞIR SERİ YILDIZ DİŞLİ YAYI	SPRING
5	K20.00471	1240 304 278		9	AĞIR SERİ YILDIZ DİŞ.FİŞEĞİ	PRESSURE PIECE
6	K20.00039	1296 333 023		1	AĞIR SERİ SENK.HALKA	ENGAGING SLEEVE
7	K20.00005	1295 233 025		1	SERİ SENKROMENÇ	ENGAGING RING

SYNCHRONIZER KIT PLANETARY

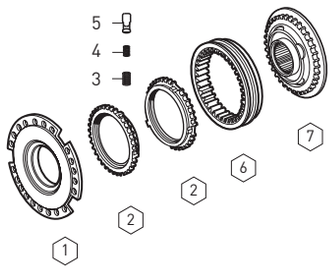

Fig.	Kacmaz No.	Oem No	Oem Old No	Pcs.	Ürün Tanımı	Description
	K20.00498	1295 298 939		Kit	AĞIR SERİ SENK.KİT	SYNCHRONIZER KIT
1	K20.00007	1296 233 006		1	TEPSİ SENKROMENÇ	FLANGE
2	K20.00038	1296 333 045	(1296 333 022)	2	AĞIR SERİ FRENLEME	SYNCHRONIZING CONE
3	K20.00469	0732 040 385		9	AĞIR SERİ YILDIZ DİŞLİ YAYI	SPRING
4	K20.00470	0732 040 386		9	AĞIR SERİ YILDIZ DİŞLİ YAYI	SPRING
5	K20.00471	1240 304 278		9	AĞIR SERİ YILDIZ DİŞ.FİŞEĞİ	PRESSURE PIECE
6	K20.00039	1296 333 023		1	AĞIR SERİ SENK.HALKA	ENGAGING SLEEVE
7	K20.00006	1313 233 001	(1297 233 018)	1	SERİ SENKROMENÇ	ENGAGING RING

SYNCHRONIZER KIT PLANETARY

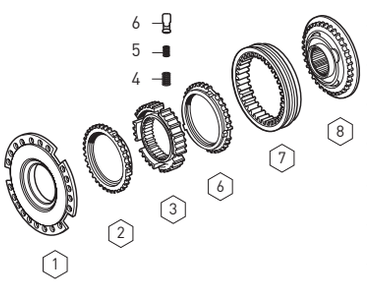

Fig.	Kacmaz No.	Oem No	Oem Old No	Pcs.	Ürün Tanımı	Description
	K20.00499	1295 298 959		Kit	AĞIR SERİ SENK.KİT	SYNCHRONIZER KIT
1	K20.00007	1296 233 006		1	TEPSİ SENKROMENÇ	FLANGE
2	K20.00038	1296 333 045	(1296 333 022)	2	AĞIR SERİ FRENLEME	SYNCHRONIZING CONE
3	K20.00363	1296 333 002		1	AĞIR SERİ YILDIZ DİŞLİ	GUIDE SLEEVE
4	K20.00469	0732 040 385		9	AĞIR SERİ YILDIZ DİŞLİ YAYI	SPRING
5	K20.00470	0732 040 386		9	AĞIR SERİ YILDIZ DİŞLİ YAYI	SPRING
6	K20.00471	1240 304 278		9	AĞIR SERİ YILDIZ DİŞ.FİŞEĞİ	PRESSURE PIECE
7	K20.00039	1296 333 023		1	AĞIR SERİ SENK.HALKA	ENGAGING SLEEVE
8	K20.00005	1295 233 025		1	SERİ SENKROMENÇ	ENGAGING RING

SYNCHRONIZER KIT PLANETARY

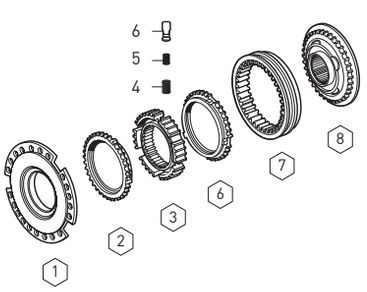

Fig.	Kacmaz No.	Oem No	Oem Old No	Pcs.	Ürün Tanımı	Description
	K20.00500	1295 298 950		Kit	AĞIR SERİ SENK.KİT	SYNCHRONIZER KIT
1	K20.00007	1296 233 006		1	TEPSİ SENKROMENÇ	FLANGE
2	K20.00038	1296 333 045	(1296 333 022)	2	AĞIR SERİ FRENLEME	SYNCHRONIZING CONE
3	K20.00363	1296 333 002		1	AĞIR SERİ YILDIZ DİŞLİ	GUIDE SLEEVE
4	K20.00469	0732 040 385		9	AĞIR SERİ YILDIZ DİŞLİ YAYI	SPRING
5	K20.00470	0732 040 386		9	AĞIR SERİ YILDIZ DİŞLİ YAYI	SPRING
6	K20.00471	1240 304 278		9	AĞIR SERİ YILDIZ DİŞ.FİŞEĞİ	PRESSURE PIECE
7	K20.00039	1296 333 023		1	AĞIR SERİ SENK.HALKA	ENGAGING SLEEVE
8	K20.00006	1313 233 001	(1297 233 018)	1	SERİ SENKROMENÇ	ENGAGING RING

PLANETARY GEAR KIT

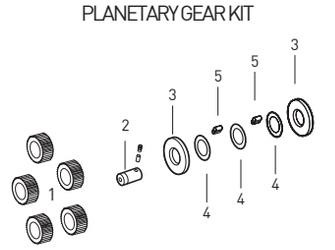

Fig.	Kacmaz No.	Oem No	Oem Old No	Pcs.	Ürün Tanımı	Description
	K20.00512	1297 298 919		Kit	AĞIR SERİ DİŞLİ TAKIMI	PLANETARY GEAR KIT
1	K20.00417	1297 232 024	(1297 332 028)	5	HEYKEL KOZA DİŞLİSİ	PLANETARY GEAR
2	K20.00418	1297 332 109	(1297 332 005)	5	HEYKEL KOZA DİŞLİ PİMİ	PLANETARY SHAFT
3	K20.01511	0501 306 212		10	HEYKEL KOZA DİŞLİ PULU	THRUST WASHER
4	K20.01512	0730 103 846		15	HEYKEL KOZA DİŞLİ PULU	THRUST WASHER
5	K20.01453	0750 119 109		120	HEYKEL KOZA DİŞ.BİLYASI	NEEDLE ROLLER (10X16.8)

Original parts names, oem numbers, symbols and descriptions used in this catalogue are for reference purposes only.

Fig.	Kacmaz No.	Oem No	Oem Old No	Pcs.	Ürün Tanımı	Description
	K20.00495	1296 298 904		Kit	AĞIR SERİ DİŞLİ TAKIMI	PLANETARY GEAR KIT
1	K20.00360	1295 232 027	(1295 332 016)	5	HEYKEL KOZA DİŞLİSİ	PLANETARY GEAR
2	K20.00361	1269 332 036		5	HEYKEL KOZA DİŞLİ PİMİ	PLANETARY SHAFT
3	K20.01510	0501 305 887		10	HEYKEL KOZA DİŞLİ PULU	THRUST WASHER
4	K20.01512	0730 103 846		15	HEYKEL KOZA DİŞLİ PULU	THRUST WASHER
5	K20.01452	0735 470 057		180	HEYKEL KOZA DİŞ.BİLYASI	NEEDLE ROLLER (6X14.8)

PLANETARY GEAR KIT

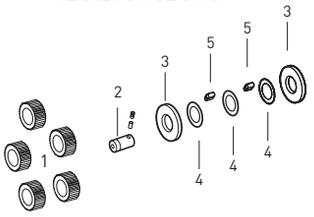

Fig.	Kacmaz No.	Oem No	Oem Old No	Pcs.	Ürün Tanımı	Description
1		1296 313 131		1	P.KİLİT EMNİYET SACI	RETAINING RING
2		0730 104 627		1	PARÇALI KİLİT	SPLIT RING
3		1296 313 238		1	PTO MİL KOVANI	SLIDING SLEEVE
4		0730 104 628		1	PTO DİŞLİ AYAR PULU	THRUST WASHER
5		1296 313 082		1	PTO DİŞLİ	GEAR 33 T
5		1296 313 083		1	PTO DİŞLİ	GEAR 36 T
5		1296 313 084		1	PTO DİŞLİ	GEAR 38 T
5		1296 313 085		1	PTO DİŞLİ	GEAR 39 T
5		1296 313 086		1	PTO DİŞLİ	GEAR 46 T
6	K20.00556	1296 213 028		1	PTO MİLİ DÜZ	INTERM.SHAFT
7	K20.00555	1296 213 028		1	PTO MİLİ FREZELİ	INTERM.SHAFT (Milled)
8		1296 313 125		1	PTO MİL SOMUNU	NUT
9		0735 410 139		1	PTO MİL BİLYASI	ROLLER BEARING
10		7429 032 102		1	PTO BİLYA KAPAK PULU	THRUST WASHER
11		1232 304 062		1	PTO BİLYA KAPAK RAYNELİ	SHIM (1.00mm)
11		1232 304 063		1	PTO BİLYA KAPAK RAYNELİ	SHIM (0.90mm)
11		1232 304 072		1	PTO BİLYA KAPAK RAYNELİ	SHIM (0.70mm)
12		1250 313 190		1	PTO BAĞLANTI KAPAĞI	COVER
13	K20.01013	0750 111 341		1	ŞANZ.ARKA KAPAK KEÇESİ	OIL SEAL

P.T.O. (POWER TAKE OFF)

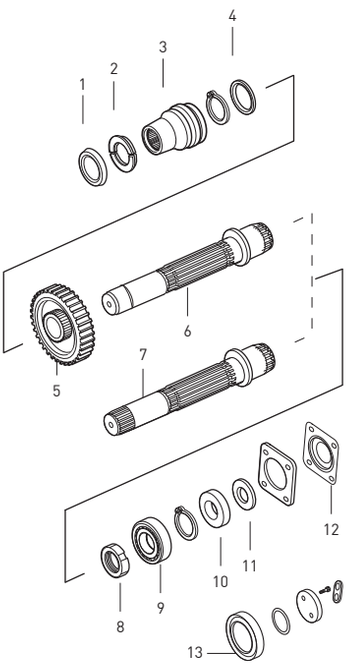

Fig.	Kacmaz No.	Oem No	Oem Old No	Pcs.	Ürün Tanımı	Description
1	K20.01584	1295 298 915		Kit	ŞANZIMAN CONTA TAKIMI	GASKET KIT
2		1313 301 038		1	ŞANZ.ÖN GÖVDE CONTASI	GASKET
3		1313 302 014		1	PRİZ.KEÇE KAPAK CONTASI	GASKET
4		1313 306 012		1	ŞANZ.HİLALİ KAPAK CONTASI	GASKET
5		1313 307 002		1	ŞANZ.ÖN GÖVDE ARKA CONTA	GASKET
5		1313 307 020		2	ŞANZ.KULE KAPAK CONTASI	GASKET
5		1313 307 003		1	ŞANZ.KULE KAPAK CONTASI	GASKET
5		1313 307 004		1	ŞANZ.KULE ALT KAPAK CONTASI	GASKET
5		1313 307 022		1	ŞANZ.KULE ÜST KAPAK CONTASI	GASKET
6		1313 301 037		1	ŞANZ.ARKA GÖVDE CONTASI	GASKET
7		1313 301 036		1	ŞANZ.BİLYA KAPAK CONTASI	GASKET
8	K20.02108	1238 308 201		1	PTO BAĞLANTI KAPAK CONTASI	GASKET
9		1313 307 005		1	ŞANZ.İSTİNAT KAPAK CONTASI	GASKET
10		1313 307 006		1	ŞANZ.İSTİNAT KAPAK CONTASI	GASKET

GEARBOX GASKET KIT

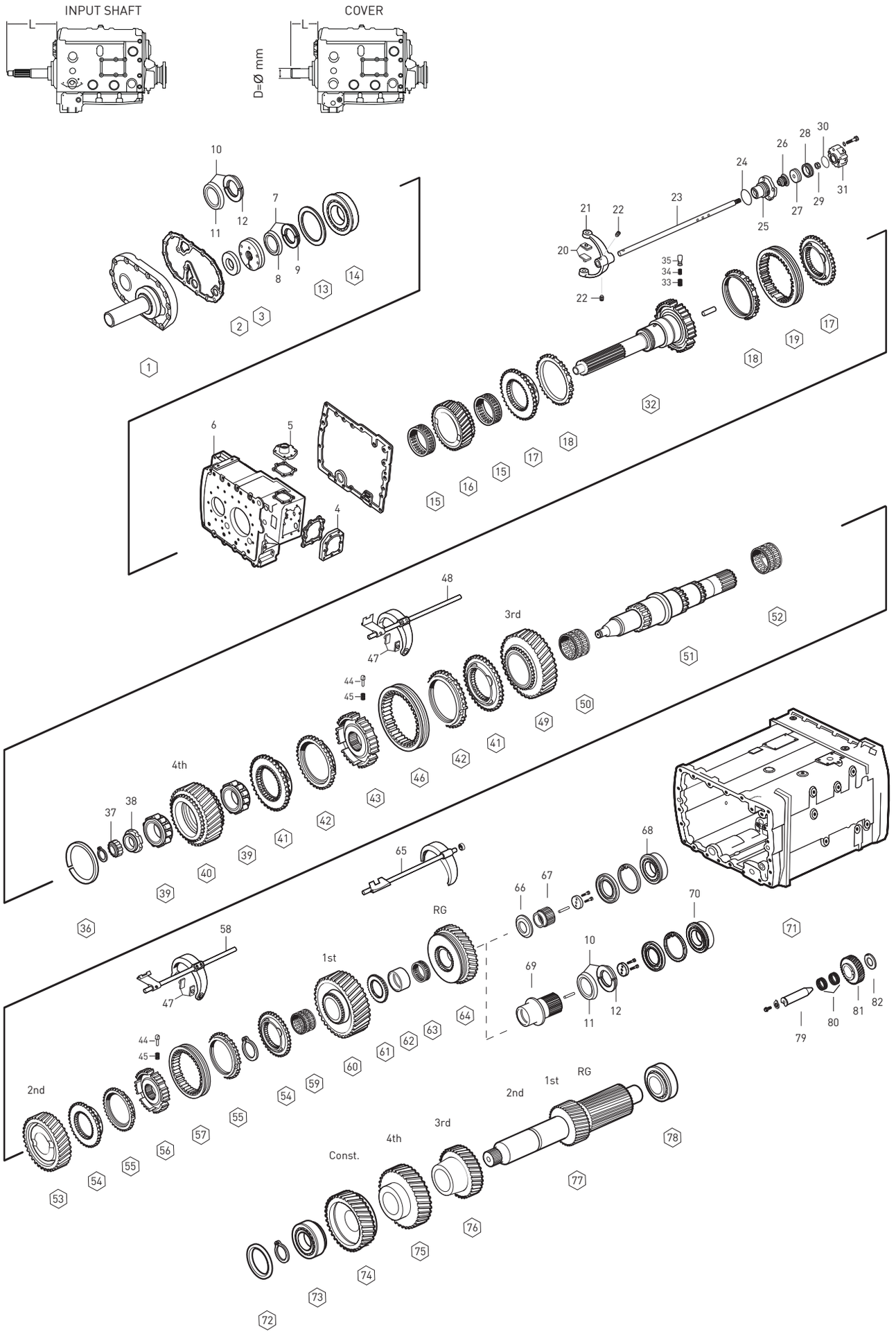

Original parts names, oem numbers, symbols and descriptions used in this catalogue are for reference purposes only.

Fig.	Kacmaz No.	Oem No	Oem Old No	Pcs.	Ürün Tanımı	Description	Sizes	Notes	SG 11.46-0.85	DG 13.68-1.00	SG 14.29-0.82
1	K20.00610	1297 302 011		1	PRİZDİREK KEÇE KAPAĞI	COVER	L=147 D=57		◆	◆	◆
2	K20.01002	0750 111 002		1	PRİZDİREK KEÇESİ	OIL SEAL	48X75X8mm		◆	◆	◆
3	K20.00484	1295 202 041		1	YAĞ POMPASI	OIL PUMP			◆	◆	◆
4	K20.00561	1295 307 479		1	ŞANZIMAN KULE KAPAĞI	COVER			◆	◆	◆
5	K20.00597	1295 307 434		1	ŞANZIMAN KULE KAPAĞI	COVER			◆	◆	◆
6		1296 301 150	(1296 301 105)	1	ŞANZIMAN ÖN GÖVDE	HOUSING			◆	◆	◆
7	K20.01541	1499 298 003		1	EMN.SACI VE P.KİLİT TAK.	SPLIT RING KIT		(1)	◆	◆	◆
7	K20.01543	1499 298 002		1	EMN.SACI VE P.KİLİT TAK.	SPLIT RING KIT		(2)	◆	◆	◆
7	K20.01545	1499 298 001		1	EMN.SACI VE P.KİLİT TAK.	SPLIT RING KIT		(3)	◆	◆	◆
8	K20.01547	0730 062 579		1	KİLİT SEGMAN EMN.SACI	RETAINING RING			◆	◆	◆
9	K20.01542	0730 105 156		2	PARÇALI KİLİT	SPLIT RING	4.00mm		◆	◆	◆
9	K20.01544	0730 105 155		2	PARÇALI KİLİT	SPLIT RING	3.90mm		◆	◆	◆
9	K20.01546	0730 105 154		2	PARÇALI KİLİT	SPLIT RING	3.80mm		◆	◆	◆
10	K20.01638	1499 298 090		1	EMN.SACI VE P.KİLİT TAK.	SPLIT RING KIT	4.30mm	(4)	◆	◆	◆
10	K20.01640	1499 298 114		1	EMN.SACI VE P.KİLİT TAK.	SPLIT RING KIT	4.20mm	(5)	◆	◆	◆
10	K20.01642	1499 298 100		1	EMN.SACI VE P.KİLİT TAK.	SPLIT RING KIT	4.10mm	(6)	◆	◆	◆
10	K20.01548	1499 298 098		1	EMN.SACI VE P.KİLİT TAK.	SPLIT RING KIT	4.00mm	(7)	◆	◆	◆
10	K20.01550	1499 298 096		1	EMN.SACI VE P.KİLİT TAK.	SPLIT RING KIT	3.90mm	(8)	◆	◆	◆
10	K20.01552	1499 298 094		1	EMN.SACI VE P.KİLİT TAK.	SPLIT RING KIT	3.80mm	(9)	◆	◆	◆
11	K20.01554	0730 061 816		2	P. KİLİT EMNİYET SACI	RETAINING RING			◆	◆	◆
12	K20.01639	0730 103 244		2	PARÇALI KİLİT	SPLIT RING	4.30mm		◆	◆	◆
12	K20.01641	0730 104 337		2	PARÇALI KİLİT	SPLIT RING	4.20mm		◆	◆	◆
12	K20.01643	0730 103 941		2	PARÇALI KİLİT	SPLIT RING	4.10mm		◆	◆	◆
12	K20.01549	0730 103 939		4	PARÇALI KİLİT	SPLIT RING	4.00mm		◆	◆	◆
12	K20.01551	0730 103 937		4	PARÇALI KİLİT	SPLIT RING	3.90mm		◆	◆	◆
12	K20.01553	0730 103 935		4	PARÇALI KİLİT	SPLIT RING	3.80mm		◆	◆	◆
13	K20.01644	0730 102 504		1	PRİZ.ÖN BİLYA RAYNELİ	SHIM	0.60mm		◆	◆	◆
13	K20.01645	2001645		1	PRİZ.ÖN BİLYA RAYNELİ	SHIM	0.30mm		◆	◆	◆
13	K20.01646	2001646		1	PRİZ.ÖN BİLYA RAYNELİ	SHIM	0.20mm		◆	◆	◆
13	K20.01647	2001647		1	PRİZ.ÖN BİLYA RAYNELİ	SHIM	0.10mm		◆	◆	◆
14	K20.01102	0750 118 130	(0750 118 131)	1	PRİZDİREK ÖN BİLYA	ROLLER BEARING	80X150X27.5mm		◆	◆	◆
15	K20.01311	0735 320 786	(0735 320 584)	2	PRİZDİREK MASURA BİLYA	NEEDLE CAGE	88X96X24.5mm		◆	◆	◆
16	K20.00009	1295 302 070	(1295 302 174)	1	TAKVİYE DİŞLİSİ 30 DİŞ	CONSTANT GEAR 30 T			◆		
16	K20.00008	1295 302 071	(1295 302 173)	1	TAKVİYE DİŞLİSİ 28 DİŞ	CONSTANT GEAR 28 T				◆	
16	K20.00010	1295 302 122	(1295 302 168)	1	TAKVİYE DİŞLİSİ 29 DİŞ	CONSTANT GEAR 29T					◆
17a	K20.00019	1295 304 278		2	TAKVİYE SENKROMENÇ	ENGAGING RING			◆	◆	◆
17b	K20.00304	1297 304 041		2	TAKVİYE SENKROMENÇ	ENGAGING RING			◆	◆	◆
18	K20.00021	1304 304 686	(1295 304 004)	2	TAKVİYE SENK.FRENLEME	SYNCHRONIZING CONE			◆	◆	◆
19	K20.00020	1295 304 002		1	TAKVİYE SENK.HALKA	ENGAGING SLEEVE			◆	◆	◆
20	K20.00186	1295 306 132		2	TAKVİYE HİLAL PABUCU	SLIDING PAD			◆	◆	◆
21		1313 312 002		1	TAKVİYE HİLALİ	G.SHIFT FORK			◆	◆	◆

NOTES :

(1) This kit includes (1499 298 003) = 2pcs 0730 105 156 + 1pcs 0730 062 579
(2) This kit includes (1499 298 002) = 2pcs 0730 105 155 + 1pcs 0730 062 579
(3) This kit includes (1499 298 001) = 2pcs 0730 105 154 + 1pcs 0730 062 579
(4) This kit includes (1499 298 090) = 2pcs 0730 103 244 + 1pcs 0730 061 816
(5) This kit includes (1499 298 114) = 2pcs 0730 104 337 + 1pcs 0730 061 816
(6) This kit includes (1499 298 100) = 2pcs 0730 103 941 + 1pcs 0730 061 816
(7) This kit includes (1499 298 098) = 2pcs 0730 103 939 + 1pcs 0730 061 816
(8) This kit includes (1499 298 096) = 2pcs 0730 103 937 + 1pcs 0730 061 816
(9) This kit includes (1499 298 094) = 2pcs 0730 103 935 + 1pcs 0730 061 816

NOTLAR :

(1) (1499 298 003) nolu kit bu parçalardan oluşur = 2pcs 0730 105 156 + 1pcs 0730 062 579
(2) (1499 298 002) nolu kit bu parçalardan oluşur = 2pcs 0730 105 155 + 1pcs 0730 062 579
(3) (1499 298 001) nolu kit bu parçalardan oluşur = 2pcs 0730 105 154 + 1pcs 0730 062 579
(4) (1499 298 090) nolu kit bu parçalardan oluşur = 2pcs 0730 103 244 + 1pcs 0730 061 816
(5) (1499 298 114) nolu kit bu parçalardan oluşur = 2pcs 0730 104 337 + 1pcs 0730 061 816
(6) (1499 298 100) nolu kit bu parçalardan oluşur = 2pcs 0730 103 941 + 1pcs 0730 061 816
(7) (1499 298 098) nolu kit bu parçalardan oluşur = 2pcs 0730 103 939 + 1pcs 0730 061 816
(8) (1499 298 096) nolu kit bu parçalardan oluşur = 2pcs 0730 103 937 + 1pcs 0730 061 816
(9) (1499 298 094) nolu kit bu parçalardan oluşur = 2pcs 0730 103 935 + 1pcs 0730 061 816

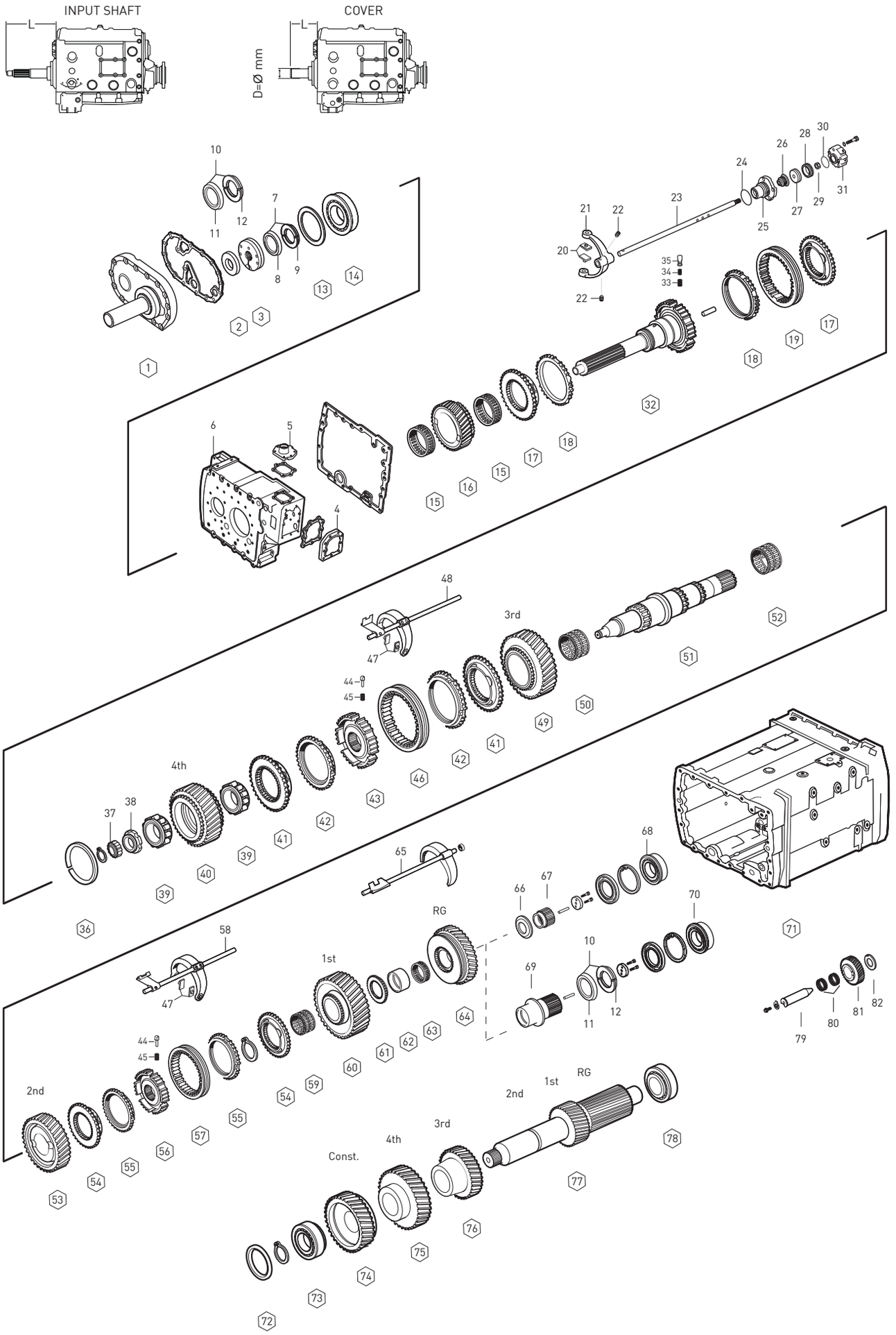

Original parts names, oem numbers, symbols and descriptions used in this catalogue are for reference purposes only.

Fig.	Kacmaz No.	Oem No	Oem Old No	Pcs.	Ürün Tanımı	Description	Sizes	Notes	SG 11.46-0.85	DG 13.68-1.00	SG 14.29-0.82
22	K20.01688	1315 312 047		2	TAKVİYE HİLAL VİDASI	SCREW	M12X1.0mm		◆	◆	◆
23		1295 312 018		1	TAKVİYE HİLAL MİLİ	G.SHIFT RAIL			◆	◆	◆
24		0634 313 671		1	TAKVİYE SİLİNDİR ORİNGİ	O-RING	80.0X3.0mm		◆	◆	◆
25	K20.01738	1296 312 042	(1296 312 016)	1	TAKVİYE SİLİNDİR GÖVDESİ	CYLINDER			◆	◆	◆
26	K20.01016	0750 112 034		1	TAKVİYE HİLAL MİL KEÇESİ	FLANGE PACKING	25.0X38.0X14.2mm		◆	◆	◆
27		1296 312 053	(1296 312 047)	1	TAKVİYE HİLAL MİL PİSTONU	PISTON			◆	◆	◆
28	K20.01021	0750 112 089		1	TAKVİYE HAVA KEÇESİ	DOUBLE PACKING	53.0X63.0X16.2mm		◆	◆	◆
29	K20.01774	0737 006 095		1	TAKVİYE HİLAL MİL SOMUNU	NUT	M16X1.5mm		◆	◆	◆
30		0634 314 018		1	TAKVİYE SİLİNDİR ORİNGİ	O-RING	59.0X2.0mm		◆	◆	◆
31		0750 132 032		1	TAKVİYE VENTİLİ	5/2 WAY VALVE			◆	◆	◆
32	K20.00501	1295 202 005	(1295 302 087)	1	PRİZDİREK	INPUT SHAFT	L=260 SAE 1 3/4		◆	◆	◆
33	K20.00469	0732 040 385		3	PRİZ.ve YILDIZ DİŞLİ YAYI	SPRING			◆	◆	◆
34	K20.00470	0732 040 386		3	PRİZ.ve YILDIZ DİŞLİ YAYI	SPRING			◆	◆	◆
35	K20.00471	1240 304 278		3	PRİZ.veYILDIZ DİŞLİ FİŞEK	PRESSURE PIECE			◆	◆	◆
36	K20.01518	0730 003 518		1	SENKROMENÇ AYAR SEKMANI	RING	6.30mm		◆	◆	◆
36	K20.01519	0730 003 517		1	SENKROMENÇ AYAR SEKMANI	RING	6.00mm		◆	◆	◆
36	K20.01520	0730 003 161		1	SENKROMENÇ AYAR SEKMANI	RING	5.10mm		◆	◆	◆
36	K20.01521	0730 003 159		1	SENKROMENÇ AYAR SEKMANI	RING	4.50mm		◆	◆	◆
36	K20.01522	0730 004 237		1	SENKROMENÇ AYAR SEKMANI	RING	4.00mm		◆	◆	◆
37	K20.01107	0750 118 010		1	KAMALI MİL UÇ BİLYA	ROLLER BEARING	30X60X25.5mm		◆	◆	◆
38	K20.00485	0737 502 092		1	KAMALI MİL SOMUNU	NUT	M60X1.5mm		◆	◆	◆
39	K20.01110	0750 118 005		2	4.VİTES DİŞLİ BİLYASI	ROLLER BEARING	63X97.5X34.8mm		◆	◆	◆
40	K20.00027	1295 304 136		1	4.VİTES DİŞLİSİ 28 DİŞ	GEAR 4th 28 T			◆		
40	K20.00026	1295 304 135	(1295 304 322)	1	4.VİTES DİŞLİSİ 30 DİŞ	GEAR 4th 30 T				◆	
40	K20.00028	1295 304 236		1	4.VİTES DİŞLİSİ 26 DİŞ	GEAR 4th 26 T					◆
41	K20.00078	1297 304 369		2	3./ 4. VİTES SENKROMENÇ	ENGAGING RING			◆	◆	◆
42	K20.00108	1297 304 484	(1297 304 402)	2	3./ 4. VİT.SENK.FRENLEME	SYNCHRONIZING CONE			◆	◆	◆
43	K20.00081	1297 304 446		1	3./ 4. VİT.YILDIZ DİŞLİ	GUIDE SLEEVE			◆	◆	◆
44	K20.00111	1297 304 436		6	1./2.-3./4.VİT.YILDIZ FİŞEĞİ	PRESSURE PIECE			◆	◆	◆
45	K20.00110	0732 040 409		6	1./2.-3./4.VİT.YILDIZ YAYI	SPRING			◆	◆	◆
46	K20.00098	1310 304 202	(1312 302 057)	1	3./ 4. VİT.SENK. HALKA	ENGAGING SLEEVE			◆	◆	◆
			(1310 304 174)								
47	K20.00204	1297 306 120		4	HİLAL PABUCU	SLIDING PAD			◆	◆	◆
48		1295 206 212	(1295 206 064)	1	3./4.VİTES HİLALİ	GEAR SHIT FORK 3rd/4th			◆	◆	◆
49	K20.00023	1295 304 127		1	3.VİTES DİŞLİSİ 32 DİŞ	GEAR 3rd 32 T			◆		◆
49	K20.00024	1295 304 128	(1295 304 324)	1	3.VİTES DİŞLİSİ 34 DİŞ	GEAR 3rd 34 T				◆	
50	K20.01312	0735 320 418		2	2./ 3. VİT.MASURA BİLYA	NEEDLE CAGE	82X90X50mm		◆	◆	◆
51	K20.00344	1295 304 245		1	KAMALI MİL	MAIN SHAFT			◆		◆
51	K20.00345	1295 304 250		1	KAMALI MİL	MAIN SHAFT				◆	
52	K20.01313	0735 320 451		1	2.VİT.MASURA BİLYA	NEEDLE CAGE	82X90X60mm		◆	◆	◆
53	K20.00030	1295 304 120		1	2.VİTES DİŞLİSİ 37 DİŞ	GEAR 2nd 37 T			◆		◆

NOTES :

NOTLAR :

Original parts names, oem numbers, symbols and descriptions used in this catalogue are for reference purposes only.

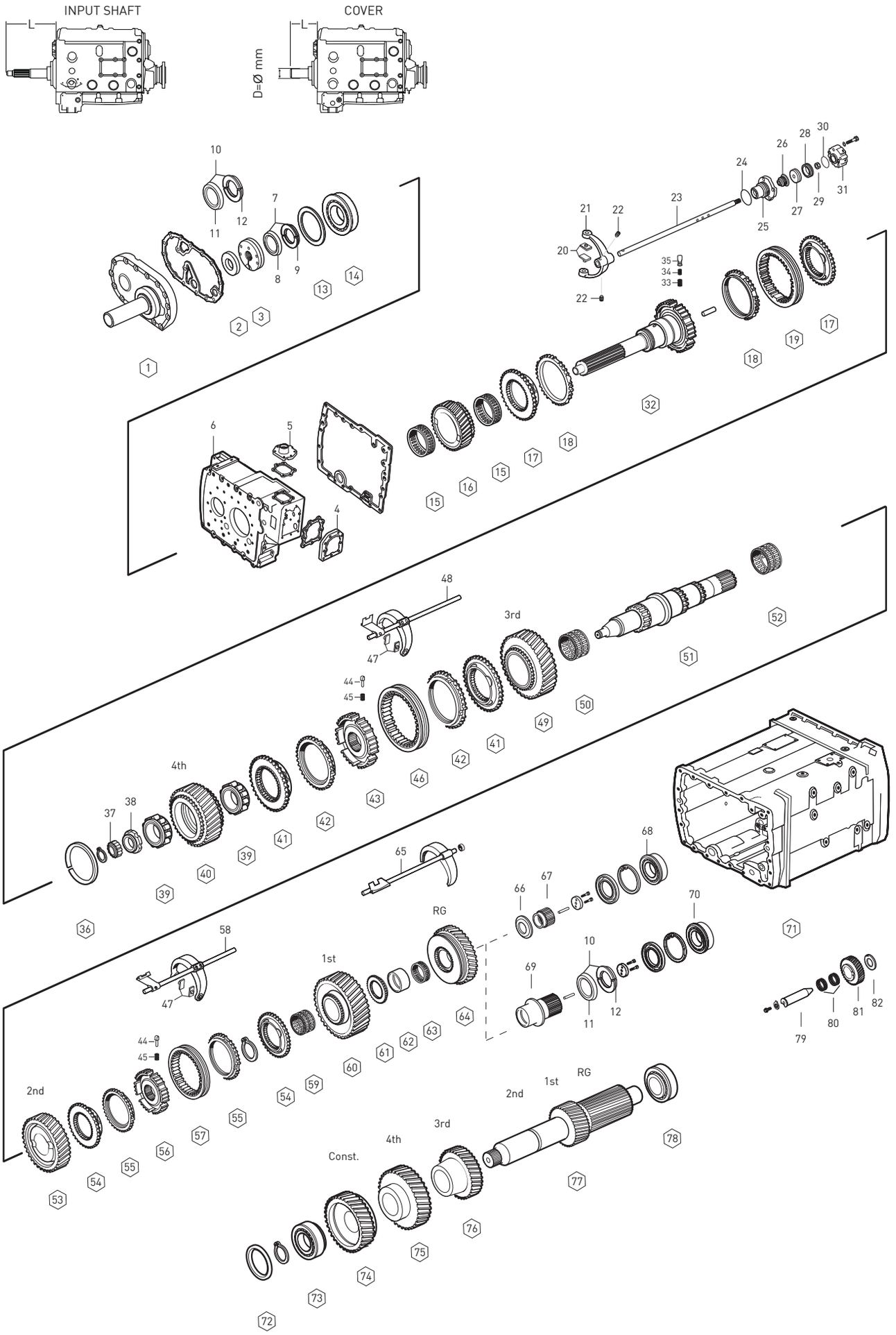

Original parts names, oem numbers, symbols and descriptions used in this catalogue are for reference purposes only.

Fig.	Kacmaz No.	Oem No	Oem Old No	Pcs.	Ürün Tanımı	Description	Sizes	Notes	SG 11.46-0.85	DG 13.68-1.00	SG 14.29-0.82
53	K20.00031	1295 304 121		1	2.VİTES DİŞLİSİ 38 DİŞ	GEAR 2nd 38 T				◆	
54	K20.00079	1297 304 371		2	1./ 2.VİTES SENKROMENÇ	ENGAGING RING			◆	◆	◆
55	K20.00112	1297 304 485	(1297 304 401)	2	1./ 2.VİT.SENK.FRENLEME	SYNCHRONIZING CONE			◆	◆	◆
56	K20.00428	1297 304 445		1	1./ 2.VİT.YILDIZ DİŞLİ	GUIDE SLEEVE			◆	◆	◆
57	K20.00082	1297 304 450	(1297 304 415)	1	1./ 2.VİT.SENK.HALKA	ENGAGING SLEEVE			◆	◆	◆
58		1295 206 215	(1295 206 077)	1	1./2.VİTES HİLALİ	GEAR SHIT FORK 1st/2nd			◆	◆	◆
59	K20.01314	0735 320 496		1	1.VİTES MASURA BİLYA	NEEDLE CAGE	70X78X55mm		◆	◆	◆
60	K20.00348	1295 304 203	(1295 304 123)	1	1.VİTES DİŞLİSİ 44 DİŞ	GEAR 1st 44 T			◆		◆
60	K20.00349	1295 304 202		1	1.VİTES DİŞLİSİ 47 DİŞ	GEAR 1st 47 T				◆	
61	K20.00351	1295 304 206		1	GERİ VİTES YILDIZ DİŞLİ	GUIDE SLEEVE			◆	◆	◆
62	K20.00352	1295 304 012		1	GERİ VİT.MAS.BİL.ÇANAĞI	BEARING RACE			◆	◆	◆
63	K20.01316	0750 115 059	(0735 320 462)	1	GERİ VİTES MASURA BİLYA	NEEDLE CAGE	75X83X40mm		◆	◆	◆
64	K20.00355	1295 304 201		1	GERİ VİTES DİŞLİSİ 39 DİŞ	REVERSE GEAR 39 T			◆		◆
64	K20.00356	1295 304 200		1	GERİ VİTES DİŞLİSİ 38 DİŞ	REVERSE GEAR 38 T				◆	
65		1295 206 254	(1295 206 243)	1	GERİ VİTES HİLALİ	GEAR SHIT FORK/RG			◆	◆	◆
66	K20.01525	1295 304 240		1	GERİ VİTES DİŞLİ PULU	THRUST WASHER			◆	◆	◆
67	K20.00036	1295 304 248		1	GÜNEŞ DİŞLİ 27 DİŞ	SUN GEAR 27 T			◆	◆	
68	K20.01114	0750 118 153		1	GÜNEŞ DİŞLİ BİLYASI	ROLLER BEARING	60X130X31mm		◆	◆	
69	K20.00037	1295 304 251		1	GÜNEŞ DİŞLİ 24 DİŞ	SUN GEAR 24 T					◆
70	K20.01115	0750 118 137		1	GÜNEŞ DİŞLİ BİLYASI	ROLLER BEARING	80X140X26mm				◆
71		1295 301 311		1	ŞANZIMAN ORTA GÖVDE	HOUSING			◆	◆	◆
72	K20.01648	0730 102 099		1	GRUP MİLİ ÖN BİLYA RAYNELİ	SHIM	3.00mm		◆	◆	◆
72	K20.01649	0730 102 060		1	GRUP MİLİ ÖN BİLYA RAYNELİ	SHIM	2.60mm		◆	◆	◆
72	K20.01650	0730 102 068		1	GRUP MİLİ ÖN BİLYA RAYNELİ	SHIM	2.20mm		◆	◆	◆
72	K20.01651	0730 102 075		1	GRUP MİLİ ÖN BİLYA RAYNELİ	SHIM	1.85mm		◆	◆	◆
72	K20.01652	2001652		1	GRUP MİLİ ÖN BİLYA RAYNELİ	SHIM	0.30mm		◆	◆	◆
72	K20.01653	2001653		1	GRUP MİLİ ÖN BİLYA RAYNELİ	SHIM	0.20mm		◆	◆	◆
72	K20.01654	2001654		1	GRUP MİLİ ÖN BİLYA RAYNELİ	SHIM	0.10mm		◆	◆	◆
73	K20.01124	0750 117 010	(0750 117 030)	1	GRUP MİLİ ÖN BİLYA	ROLLER BEARING	50.8X100X35mm		◆	◆	◆
74	K20.00012	1295 303 036		1	OVARD.DİŞLİ KARŞ.31 DİŞ	CONSTANT GEAR 31 T			◆		
74	K20.00011	1295 303 101	(1295 303 037)	1	OVARD.DİŞLİ KARŞ.34 DİŞ	CONSTANT GEAR 34 T				◆	
74	K20.00013	1295 303 060		1	OVARD.DİŞLİ KARŞ.32 DİŞ	CONSTANT GEAR 32 T					◆
75	K20.00014	1295 303 028		1	4.VİTES DİŞLİ KARŞ.34 DİŞ	GEAR 4th 34 T			◆		
75	K20.00035	1295 303 103	(1295 303 027)	1	4.VİTES DİŞLİ KARŞ.31 DİŞ	GEAR 4th 31 T				◆	
75	K20.00015	1295 303 094	(1295 303 061)	1	4.VİTES DİŞLİ KARŞ.35 DİŞ	GEAR 4th 35 T					◆
76	K20.00017	1295 303 025		1	3.VİTES DİŞLİ KARŞ.28 DİŞ	GEAR 3rd 28 T			◆		◆
76	K20.00018	1295 303 026	(1295 303 105)	1	3.VİTES DİŞLİ KARŞ.25 DİŞ	GEAR 3rd 25 T				◆	
77	K20.00357	1295 303 067	(1295 303 054)	1	GRUP MİLİ 19-23 DİŞ	COUNTER SHAFT 19-23 T			◆		◆
77	K20.00359	1295 303 066	(1295 303 053)	1	GRUP MİLİ 17-20 DİŞ	COUNTER SHAFT 17-20 T				◆	
78	K20.01125	0750 117 008		1	GRUP MİLİ ARKA BİLYA	ROLLER BEARING	50X110X42.2mm		◆	◆	◆
79	K20.00598	1295 305 056	(1295 305 008)	1	KÜÇÜK GERİ VİTES PİMİ	PIN			◆	◆	◆
80	K20.01335	0750 115 011	(0735 320 042)	2	KÜÇÜK GERİ VİT.MAS.BİLYA	NEEDLE CAGE	40.0X60.0X26.0mm		◆	◆	◆
81	K20.00601	1295 305 051		1	KÜÇÜK GERİ VİTES	REV.IDLER GEAR			◆		◆
81	K20.00600	1295 305 052		1	KÜÇÜK GERİ VİTES	REV.IDLER GEAR				◆	
82	K20.01655	0730 150 064		1	KÜÇÜK GERİ VİTES PULU	THRUST WASHER			◆	◆	◆

NOTES :

NOTLAR :

Original parts names, oem numbers, symbols and descriptions used in this catalogue are for reference purposes only.

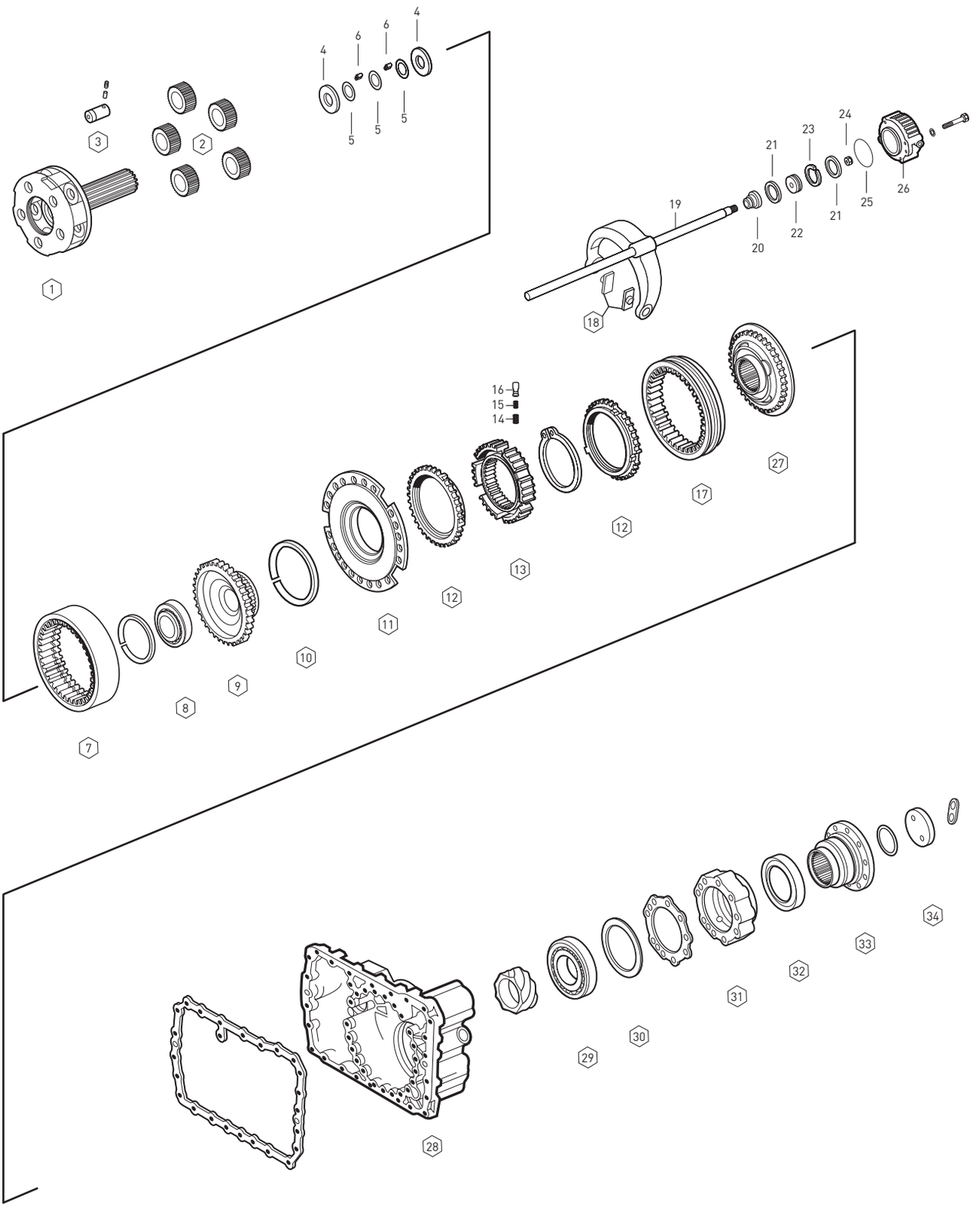

Original parts names, oem numbers, symbols and descriptions used in this catalogue are for reference purposes only.

Fig.	Kacmaz No.	Oem No	Oem Old No	Pcs.	Ürün Tanımı	Description	Sizes	Notes	SG 11.46-0.85	DG 13.68-1.00	SG 14.29-0.82
1	K20.00602	1295 232 044	(1295 232 048)	1	ŞANZIMAN HEYKELİ	PLANETARY CARRIER		A	◆	◆	
			(1295 232 028)								
1	K20.00603	1297 232 045	(1297 232 024)	1	ŞANZIMAN HEYKELİ	PLANETARY CARRIER		B			◆
			(1297 232 026)								
2	K20.00360	1295 232 027	(1295 332 016)	5	HEYKEL KOZA DİŞLİ TAKIMI	PLANETARY GEAR SET		A	◆	◆	
2	K20.00417	1297 232 024	(1297 332 028)	5	HEYKEL KOZA DİŞLİ TAKIMI	PLANETARY GEAR SET		B			◆
3	K20.00361	1269 332 036		5	HEYKEL KOZA DİŞLİ PİMİ	PLANET SHAFT		A	◆	◆	
3	K20.00418	1297 332 109	(1297 332 005)	5	HEYKEL KOZA DİŞLİ PİMİ	PLANET SHAFT		B			◆
4	K20.01510	0501 305 887		10	HEYKEL KOZA DİŞLİ PULU	THRUST WASHER		A	◆	◆	
4	K20.01511	0501 306 212		10	HEYKEL KOZA DİŞLİ PULU	THRUST WASHER		B			◆
5	K20.01512	0730 103 846		15	HEYKEL KOZA DİŞLİ PULU	THRUST WASHER		AB	◆	◆	◆
6	K20.01452	0735 470 057		180	HEYKEL KOZA DİŞ.TANE BİL.	NEEDLE ROLLER	6X14.8mm	A	◆	◆	
6	K20.01453	0750 119 143	(0750 119 109)	120	HEYKEL KOZA DİŞ.TANE BİL.	NEEDLE ROLLER	10X16.8mm	B			◆
7	K20.00604	1295 332 053	(1295 332 028)	1	ÇEMBER DİŞLİ 83 DİŞ	RING WHEEL 83 T		A	◆	◆	
7	K20.00605	1295 332 086		1	ÇEMBER DİŞLİ 86 DİŞ	RING WHEEL 86 T		B			◆
8	K20.01132	0750 116 166	(0635 338 048)	1	PLANET ÇAN DİŞLİ BİLYASI	ROLLER BEARING	75X105X16mm	A	◆	◆	
8	K20.01133	0750 116 165	(0635 338 049)	1	PLANET ÇAN DİŞLİ BİLYASI	ROLLER BEARING	80X110X16mm	B			◆
9	K20.00606	1295 332 021		1	PLANET ÇAN DİŞLİ 83 DİŞ	CARRIER HUB 83 T		A	◆	◆	
9	K20.00607	1297 332 035		1	PLANET ÇAN DİŞLİ 86 DİŞ	CARRIER HUB 86 T		B			◆
10	K20.01656	0730 505 056	(0730 505 055)	1	ÇEMBER DİŞLİ SEGMANI	SPRING RING	3.20mm		◆	◆	◆
11	K20.00007	1296 233 006		1	TEPSİ SENKROMENÇ	FLANGE			◆	◆	◆
12	K20.00038	1296 333 045	(1296 333 022)	2	AĞIR SERİ SENK.FRENLEME	SYNCHRONIZING CONE			◆	◆	◆
13	K20.00363	1296 333 002		1	AĞIR SERİ YILDIZ DİŞLİ	GUIDE SLEEVE			◆	◆	◆
14	K20.00469	0732 040 385		9	AĞIR SERİ YILDIZ DİŞLİ YAYI	SPRING			◆	◆	◆
15	K20.00470	0732 040 386		9	AĞIR SERİ YILDIZ DİŞLİ YAYI	SPRING			◆	◆	◆
16	K20.00471	1240 304 278		9	AĞIR SERİ YILDIZ DİŞ.FİŞEĞİ	PRESSURE PIECE			◆	◆	◆
17	K20.00039	1296 333 023	(0769 186 286)	1	AĞIR SERİ SENK.HALKA	ENGAGING SLEEVE			◆	◆	◆
18	K20.00341	1296 334 004		2	AĞIR SERİ HİLAL PABUCU	SLIDING PAD			◆	◆	◆
19		1312 234 002		1	AĞIR SERİ HİLALİ	GEAR SHIFT FORK			◆	◆	◆
20	K20.01016	0750 112 034		1	AĞIR SERİ HİLAL MİL KEÇESİ	FLANGE PACKING	25.0X38.0X14.2mm		◆	◆	◆
21	K20.01024	0734 317 150	(0750 112 019)	2	AĞIR SERİ HAVA KEÇESİ	SEALING RING	80.0X90.0X4.8mm		◆	◆	◆
22		1296 334 039		1	AĞIR SERİ HİLAL MİL PİSTONU	PISTON			◆	◆	◆
23	K20.01657	0750 112 066		1	AĞIR SERİ HİLAL MİL FİBERİ	GUIDE RING			◆	◆	◆
24	K20.01774	0737 006 095		1	AĞIR SERİ HİLAL MİL SOMUNU	NUT	M16X1.5mm		◆	◆	◆
25		0634 314 019		1	AĞIR SERİ SİLİNDİR ORİNGİ	O-RING	94.0X3.0mm		◆	◆	◆
26	K20.00845	1295 334 075		1	AĞIR SERİ SİLİNDİR GÖVDESİ	CYLINDER			◆	◆	◆
27	K20.00005	1295 233 025		1	SERİ SENKROMENÇ	ENGAGING RING	36spl.	A	◆	◆	
27	K20.00006	1313 233 001	(1297 233 018)	1	SERİ SENKROMENÇ	ENGAGING RING	38spl.	B			◆
28		1296 301 133		1	ŞANZIMAN ARKA GÖVDE	HOUSING			◆	◆	◆
29	K20.01134	0750 116 394	(0750 116 002)	1	ŞANZIMAN KUTU BİLYASI	ROLLER BEARING	90X160X30mm		◆	◆	◆
30	K20.01658	0730 100 115		1	ŞANZ.ARKA BİLYA RAYNELİ	SHIM	0.30mm		◆	◆	◆

NOTES :

A : Alphabetical letters used in conjunction with these products are classified.

B : Alphabetical letters used in conjunction with these products are classified.

NOTLAR :

A : Alfabetik harf ile sınıflandırılan ürünler, birlikte kullanılır.

B : Alfabetik harf ile sınıflandırılan ürünler, birlikte kullanılır.

Original parts names, oem numbers, symbols and descriptions used in this catalogue are for reference purposes only.

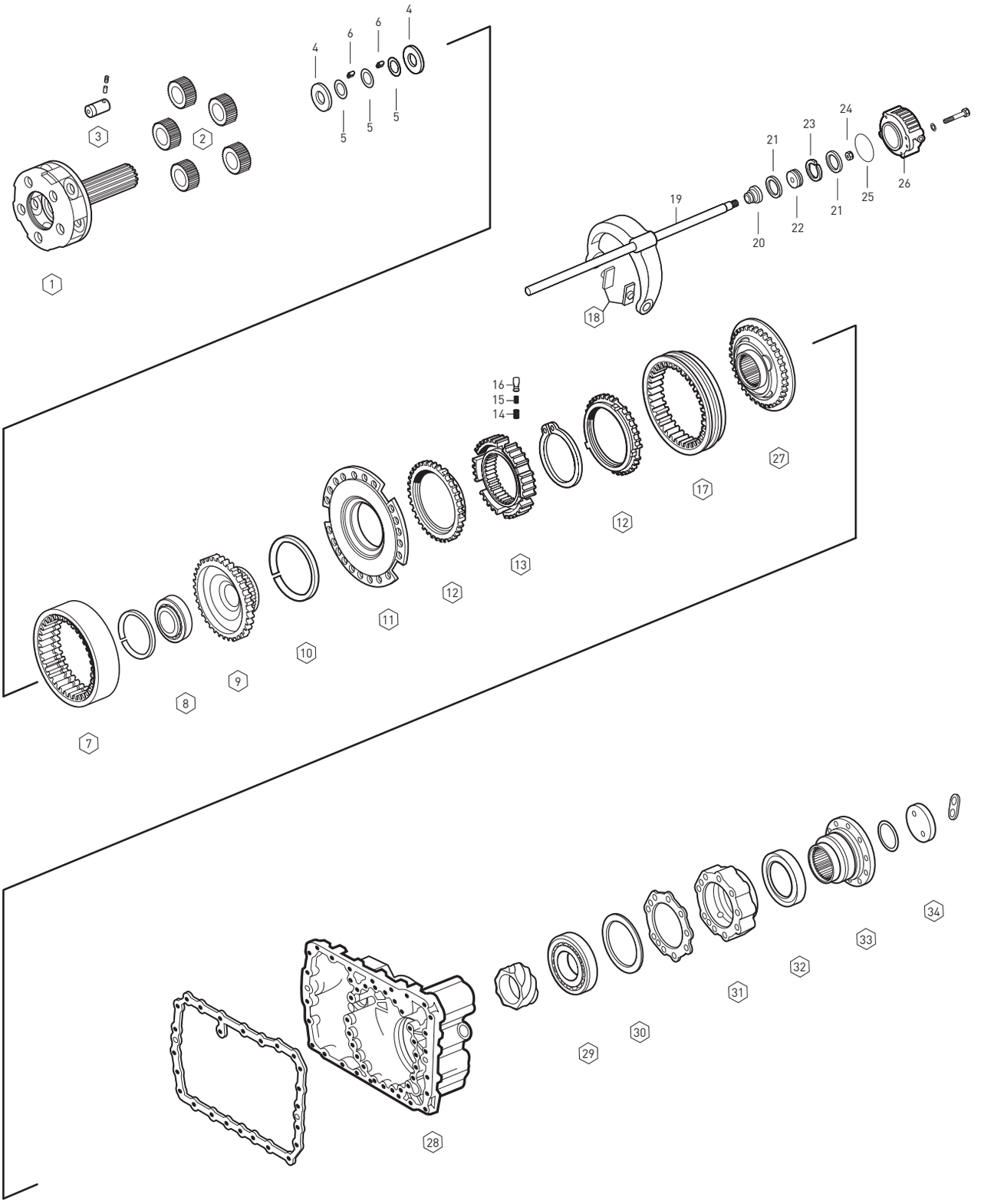

Original parts names, oem numbers, symbols and descriptions used in this catalogue are for reference purposes only.

Fig.	Kacmaz No.	Oem No	Oem Old No	Pcs.	Ürün Tanımı	Description	Sizes	Notes	SG 11.46-0.85	DG 13.68-1.00	SG 14.29-0.82
30	K20.01659	0730 100 116		1	ŞANZ.ARKA BİLYA RAYNELİ	SHIM	0.20mm		◆	◆	◆
30	K20.01660	2001660		1	ŞANZ.ARKA BİLYA RAYNELİ	SHIM	0.10mm		◆	◆	◆
31		1295 231 001		1	ŞANZ.ARKA BİLYA KAPAĞI	BEARING COVER			◆	◆	◆
32	K20.01013	0750 111 341		1	ŞANZ.ARKA KAPAK KEÇESİ	OIL SEAL	105.0X130.0X12mm		◆	◆	◆
33	K20.00369	1295 338 014		1	ŞANZIMAN FLANŞI	COMPANIONFLANGE	10-H,Ø180mm	A	◆	◆	
33	K20.00371	1297 338 010		1	ŞANZIMAN FLANŞI	COMPANIONFLANGE	10-H,Ø180mm	B			◆
34	K20.01661	1295 332 051		1	ŞANZIMAN FLANŞ PULU	WASHER			◆	◆	◆

NOTES :

A : Alphabetical letters used in conjunction with these products are classified.

B : Alphabetical letters used in conjunction with these products are classified.

NOTLAR :

A : Alfabetik harf ile sınıflandırılan ürünler, birlikte kullanılır.

B : Alfabetik harf ile sınıflandırılan ürünler, birlikte kullanılır.

SYNCHRONIZER KIT CONST.

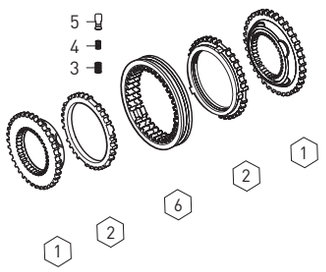

Fig.	Kacmaz No.	Oem No	Oem Old No	Pcs.	Ürün Tanımı	Description
	K20.00486	1295 298 936		Kit	TAKVİYE SENKROMENÇ KİT	SYNCHRONIZER KIT Const
1	K20.00019	1295 304 278		2	TAKVİYE SENKROMENÇ	ENGAGING RING
2	K20.00021	1304 304 686	(1295 304 004)	2	TAKVİYE SENK.FRENLEME	SYNCHRONIZING CONE
3	K20.00469	0732 040 385		3	TAKVİYE YILDIZ DİŞLİ YAYI	SPRING
4	K20.00470	0732 040 386		3	TAKVİYE YILDIZ DİŞLİ YAYI	SPRING
5	K20.00471	1240 304 278		3	TAK.YILDIZ DİŞLİ FİŞEĞİ	PRESSURE PIECE
6	K20.00020	1295 304 002		1	PRİZ.SENK.HALKA	ENGAGING SLEEVE

SYNCHRONIZER KIT 3rd/4th

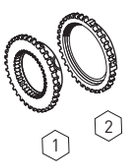

Fig.	Kacmaz No.	Oem No	Oem Old No	Pcs.	Ürün Tanımı	Description
	K20.00503	1297 204 071		Kit	3./4.VİT.SENKROMENÇ KİT	SYNCH.KIT 3rd/4th
1	K20.00078	1297 304 369		1	3./4.VİT.SENKROMENÇ	ENGAGING RING
2	K20.00108	1297 304 484	(1297 304 402)	1	3./4.VİT.SENK.FRENLEME	SYNCHRONIZING CONE

SYNCHRONIZER KIT 3rd/4th

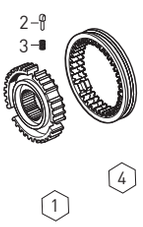

Fig.	Kacmaz No.	Oem No	Oem Old No	Pcs.	Ürün Tanımı	Description
	K20.00504	1297 204 069		Kit	3./4.VİT.HALKA YILDIZ KİTİ	SYNCH.KIT 3rd/4th
1	K20.00081	1297 304 446		1	3./4.VİT.YILDIZ DİŞLİ	GUIDE SLEEVE
2	K20.00111	1297 304 436		3	3./4.VİT.YILDIZ DİŞLİ FİŞEĞİ	PRESSURE PIECE
3	K20.00110	0732 040 409		3	3./4.VİT.YILDIZ DİŞLİ YAYI	SPRING
4	K20.00098	1310 304 202	(1312 302 057)	1	3./4.VİT.SENK.HALKA	ENGAGING SLEEVE
			(1310 304 174)			

SYNCHRONIZER KIT 3rd/4th

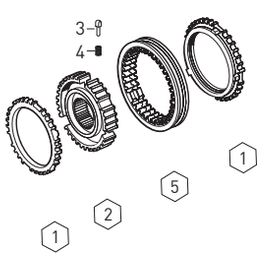

Fig.	Kacmaz No.	Oem No	Oem Old No	Pcs.	Ürün Tanımı	Description
	K20.00505	1297 204 054		Kit	3./4.VİT.SENKROMENÇ KİT	SYNCH.KIT 3rd/4th
1	K20.00108	1297 304 484	(1297 304 402)	2	3./4.VİT.FRENLEME	SYNCH.CONE
2	K20.00081	1297 304 446		1	3./4.VİT.YILDIZ DİŞLİ	GUIDE SLEEVE
3	K20.00111	1297 304 436		3	3./4.VİT.YILDIZ DİŞLİ FİŞEĞİ	PRESSURE PIECE
4	K20.00110	0732 040 409		3	3./4.VİT.YILDIZ DİŞLİ YAYI	SPRING
5	K20.00098	1310 304 202	(1312 302 057)	1	3./4.VİT.SENK.HALKA	ENGAGING SLEEVE
			(1310 304 174)			

SYNCHRONIZER KIT 3rd/4th

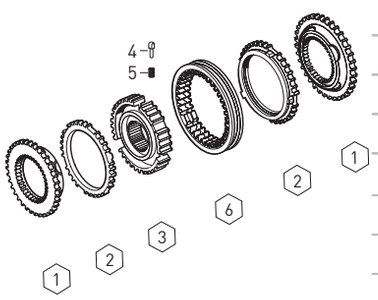

Fig.	Kacmaz No.	Oem No	Oem Old No	Pcs.	Ürün Tanımı	Description
	K20.00506	1297 298 959		Kit	3./4.VİT.SENKROMENÇ KİT	SYNCH.KIT 3rd/4th
1	K20.00078	1297 304 369		2	3./4.VİT.SENKROMENÇ	ENGAGING RING
2	K20.00108	1297 304 484	(1297 304 402)	2	3./4.VİT.FRENLEME	SYNCH.CONE
3	K20.00081	1297 304 446		1	3./4.VİT.YILDIZ DİŞLİ	GUIDE SLEEVE
4	K20.00111	1297 304 436		3	3./4.VİT.YILDIZ DİŞLİ FİŞEĞİ	PRESSURE PIECE
5	K20.00110	0732 040 409		3	3./4.VİT.YILDIZ DİŞLİ YAYI	SPRING
6	K20.00098	1310 304 202	(1312 302 057)	1	3./4.VİT.SENK.HALKA	ENGAGING SLEEVE
			(1310 304 174)			

Original parts names, oem numbers, symbols and descriptions used in this catalogue are for reference purposes only.

Fig.	Kacmaz No.	Oem No	Oem Old No	Pcs.	Ürün Tanımı	Description
	K20.00507	1297 204 070		Kit	1./2.VİT.SENKROMENÇ KİT	SYNCH.KIT 1st/2nd
1	K20.00079	1297 304 371		1	1./2.VİT.SENKROMENÇ	ENGAGING RING
2	K20.00112	1297 304 485	(1297 304 401)	1	1./2.VİT.SENK.FRENLEME	SYNCHRONIZING CONE

SYNCHRONIZER KIT 1st/2nd

Fig.	Kacmaz No.	Oem No	Oem Old No	Pcs.	Ürün Tanımı	Description
	K20.00508	1297 204 067		Kit	1./2.VİT.HALKA YILDIZ KİTİ	SYNCH.KIT 1st/2nd
1	K20.00428	1297 304 445		1	1./2.VİT.YILDIZ DİŞLİ	GUIDE SLEEVE
2	K20.00111	1297 304 436		3	1./2.VİT.YILDIZ DİŞLİ FİŞEĞİ	PRESSURE PIECE
3	K20.00110	0732 040 409		3	1./2.VİT.YILDIZ DİŞLİ YAYI	SPRING
4	K20.00082	1297 304 450	(1297 304 415)	1	1./2.VİT.SENK.HALKA	ENGAGING SLEEVE

SYNCHRONIZER KIT 1st/2nd

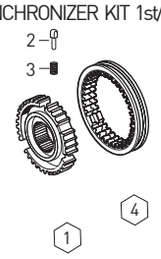

Fig.	Kacmaz No.	Oem No	Oem Old No	Pcs.	Ürün Tanımı	Description
	K20.00509	1297 204 053		Kit	1./2.VİT.SENKROMENÇ KİT	SYNCH.KIT 1st/2nd
1	K20.00112	1297 304 485	(1297 304 401)	2	1./2.VİT.FRENLEME	SYNCH.CONE
2	K20.00428	1297 304 445		1	1./2.VİT.YILDIZ DİŞLİ	GUIDE SLEEVE
3	K20.00111	1297 304 436		3	1./2.VİT.YILDIZ DİŞLİ FİŞEĞİ	PRESSURE PIECE
4	K20.00110	0732 040 409		3	1./2.VİT.YILDIZ DİŞLİ YAYI	SPRING
5	K20.00082	1297 304 450	(1297 304 415)	1	1./2.VİT.SENK.HALKA	ENGAGING SLEEVE

SYNCHRONIZER KIT 1st/2nd

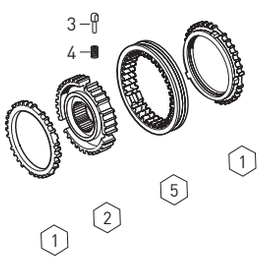

Fig.	Kacmaz No.	Oem No	Oem Old No	Pcs.	Ürün Tanımı	Description
	K20.00510	1297 298 957		Kit	1./2.VİT.SENKROMENÇ KİT	SYNCH.KIT 1st/2nd
1	K20.00079	1297 304 371		2	1./2.VİT.SENKROMENÇ	ENGAGING RING
2	K20.00112	1297 304 485	(1297 304 401)	2	1./2.VİT.FRENLEME	SYNCH.CONE
3	K20.00428	1297 304 445		1	1./2.VİT.YILDIZ DİŞLİ	GUIDE SLEEVE
4	K20.00111	1297 304 436		3	1./2.VİT.YILDIZ DİŞLİ FİŞEĞİ	PRESSURE PIECE
5	K20.00110	0732 040 409		3	1./2.VİT.YILDIZ DİŞLİ YAYI	SPRING
6	K20.00082	1297 304 450	(1297 304 415)	1	1./2.VİT.SENK.HALKA	ENGAGING SLEEVE

SYNCHRONIZER KIT 1st/2nd

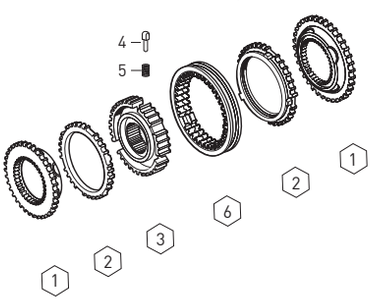

Fig.	Kacmaz No.	Oem No	Oem Old No	Pcs.	Ürün Tanımı	Description
	K20.00496	1295 298 938		Kit	AĞIR SERİ SENK.KİT	SYNCHRONIZER KIT
1	K20.00007	1296 233 006		1	TEPSİ SENKROMENÇ	FLANGE
2	K20.00038	1296 333 045	(1296 333 022)	2	AĞIR SERİ FRENLEME	SYNCHRONIZING CONE
3	K20.00469	0732 040 385		9	AĞIR SERİ YILDIZ DİŞLİ YAYI	SPRING
4	K20.00470	0732 040 386		9	AĞIR SERİ YILDIZ DİŞLİ YAYI	SPRING
5	K20.00471	1240 304 278		9	AĞIR SERİ YILDIZ DİŞ.FİŞEĞİ	PRESSURE PIECE
6	K20.00005	1295 233 025		1	SERİ SENKROMENÇ	ENGAGING RING

SYNCHRONIZER KIT PLANETARY

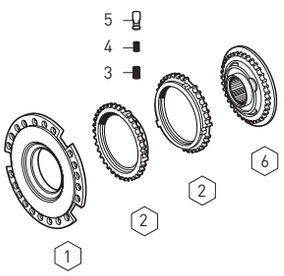

Original parts names, oem numbers, symbols and descriptions used in this catalogue are for reference purposes only.

SYNCHRONIZER KIT PLANETARY

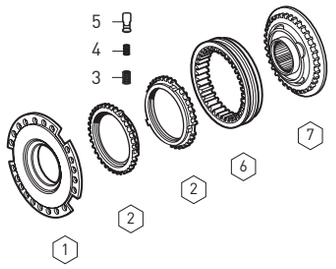

Fig.	Kacmaz No.	Oem No	Oem Old No	Pcs.	Ürün Tanımı	Description
	K20.00497	1295 298 937		Kit	AĞIR SERİ SENK.KİT	SYNCHRONIZER KIT
1	K20.00007	1296 233 006		1	TEPSİ SENKROMENÇ	FLANGE
2	K20.00038	1296 333 045	(1296 333 022)	2	AĞIR SERİ FRENLEME	SYNCHRONIZING CONE
3	K20.00469	0732 040 385		9	AĞIR SERİ YILDIZ DİŞLİ YAYI	SPRING
4	K20.00470	0732 040 386		9	AĞIR SERİ YILDIZ DİŞLİ YAYI	SPRING
5	K20.00471	1240 304 278		9	AĞIR SERİ YILDIZ DİŞ.FİŞEĞİ	PRESSURE PIECE
6	K20.00039	1296 333 023		1	AĞIR SERİ SENK.HALKA	ENGAGING SLEEVE
7	K20.00005	1295 233 025		1	SERİ SENKROMENÇ	ENGAGING RING

SYNCHRONIZER KIT PLANETARY

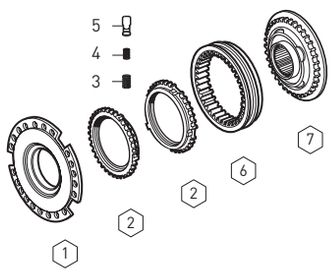

Fig.	Kacmaz No.	Oem No	Oem Old No	Pcs.	Ürün Tanımı	Description
	K20.00498	1295 298 939		Kit	AĞIR SERİ SENK.KİT	SYNCHRONIZER KIT
1	K20.00007	1296 233 006		1	TEPSİ SENKROMENÇ	FLANGE
2	K20.00038	1296 333 045	(1296 333 022)	2	AĞIR SERİ FRENLEME	SYNCHRONIZING CONE
3	K20.00469	0732 040 385		9	AĞIR SERİ YILDIZ DİŞLİ YAYI	SPRING
4	K20.00470	0732 040 386		9	AĞIR SERİ YILDIZ DİŞLİ YAYI	SPRING
5	K20.00471	1240 304 278		9	AĞIR SERİ YILDIZ DİŞ.FİŞEĞİ	PRESSURE PIECE
6	K20.00039	1296 333 023		1	AĞIR SERİ SENK.HALKA	ENGAGING SLEEVE
7	K20.00006	1313 233 001	(1297 233 018)	1	SERİ SENKROMENÇ	ENGAGING RING

SYNCHRONIZER KIT PLANETARY

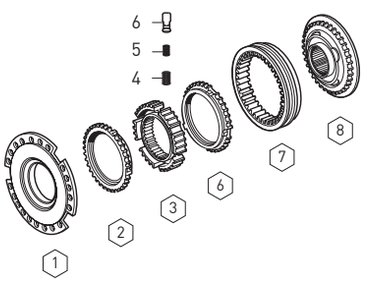

Fig.	Kacmaz No.	Oem No	Oem Old No	Pcs.	Ürün Tanımı	Description
	K20.00499	1295 298 959		Kit	AĞIR SERİ SENK.KİT	SYNCHRONIZER KIT
1	K20.00007	1296 233 006		1	TEPSİ SENKROMENÇ	FLANGE
2	K20.00038	1296 333 045	(1296 333 022)	2	AĞIR SERİ FRENLEME	SYNCHRONIZING CONE
3	K20.00363	1296 333 002		1	AĞIR SERİ YILDIZ DİŞLİ	GUIDE SLEEVE
4	K20.00469	0732 040 385		9	AĞIR SERİ YILDIZ DİŞLİ YAYI	SPRING
5	K20.00470	0732 040 386		9	AĞIR SERİ YILDIZ DİŞLİ YAYI	SPRING
6	K20.00471	1240 304 278		9	AĞIR SERİ YILDIZ DİŞ.FİŞEĞİ	PRESSURE PIECE
7	K20.00039	1296 333 023		1	AĞIR SERİ SENK.HALKA	ENGAGING SLEEVE
8	K20.00005	1295 233 025		1	SERİ SENKROMENÇ	ENGAGING RING

SYNCHRONIZER KIT PLANETARY

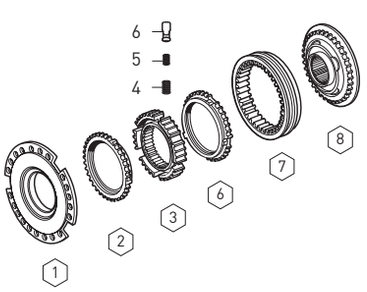

Fig.	Kacmaz No.	Oem No	Oem Old No	Pcs.	Ürün Tanımı	Description
	K20.00500	1295 298 950		Kit	AĞIR SERİ SENK.KİT	SYNCHRONIZER KIT
1	K20.00007	1296 233 006		1	TEPSİ SENKROMENÇ	FLANGE
2	K20.00038	1296 333 045	(1296 333 022)	2	AĞIR SERİ FRENLEME	SYNCHRONIZING CONE
3	K20.00363	1296 333 002		1	AĞIR SERİ YILDIZ DİŞLİ	GUIDE SLEEVE
4	K20.00469	0732 040 385		9	AĞIR SERİ YILDIZ DİŞLİ YAYI	SPRING
5	K20.00470	0732 040 386		9	AĞIR SERİ YILDIZ DİŞLİ YAYI	SPRING
6	K20.00471	1240 304 278		9	AĞIR SERİ YILDIZ DİŞ.FİŞEĞİ	PRESSURE PIECE
7	K20.00039	1296 333 023		1	AĞIR SERİ SENK.HALKA	ENGAGING SLEEVE
8	K20.00006	1313 233 001	(1297 233 018)	1	SERİ SENKROMENÇ	ENGAGING RING

Original parts names, oem numbers, symbols and descriptions used in this catalogue are for reference purposes only.

Fig.	Kacmaz No.	Oem No	Oem Old No	Pcs.	Ürün Tanımı	Description
	K20.00512	1297 298 919		Kit	AĞIR SERİ DİŞLİ TAKIMI	PLANETARY GEAR KIT
1	K20.00417	1297 232 024	(1297 332 028)	5	HEYKEL KOZA DİŞLİSİ	PLANETARY GEAR
2	K20.00418	1297 332 109	(1297 332 005)	5	HEYKEL KOZA DİŞLİ PİMİ	PLANETARY SHAFT
3	K20.01511	0501 306 212		10	HEYKEL KOZA DİŞLİ PULU	THRUST WASHER
4	K20.01512	0730 103 846		15	HEYKEL KOZA DİŞLİ PULU	THRUST WASHER
5	K20.01453	0750 119 109		120	HEYKEL KOZA DİŞ.BİLYASI	NEEDLE ROLLER (10X16.8)

PLANETARY GEAR KIT

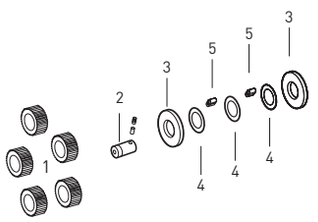

Fig.	Kacmaz No.	Oem No	Oem Old No	Pcs.	Ürün Tanımı	Description
	K20.00495	1296 298 904		Kit	AĞIR SERİ DİŞLİ TAKIMI	PLANETARY GEAR KIT
1	K20.00360	1295 232 027	(1295 332 016)	5	HEYKEL KOZA DİŞLİSİ	PLANETARY GEAR
2	K20.00361	1269 332 036		5	HEYKEL KOZA DİŞLİ PİMİ	PLANETARY SHAFT
3	K20.01510	0501 305 887		10	HEYKEL KOZA DİŞLİ PULU	THRUST WASHER
4	K20.01512	0730 103 846		15	HEYKEL KOZA DİŞLİ PULU	THRUST WASHER
5	K20.01452	0735 470 057		180	HEYKEL KOZA DİŞ.BİLYASI	NEEDLE ROLLER (6X14.8)

PLANETARY GEAR KIT

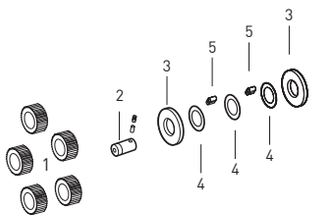

Fig.	Kacmaz No.	Oem No	Oem Old No	Pcs.	Ürün Tanımı	Description
1		0630 531 050		1	PTO MİL SEKMANI	RETAINING RING
2		0730 105 043		1	PTO MİL PULU	WASHER (4.00mm)
3		1296 313 132		1	PTO DİŞLİ	GEAR 44 T
4		1296 313 132		1	PTO MİLİ DÜZ	INTERM.SHAFT
5		1296 313 067		1	PTO MİL KOVANI	SLIDING SLEEVE
6		0730 003 396		1	PTO MİL KOVAN PULU	THRUST WASHER
7		0635 332 137		1	PTO MİL BİLYASI	ROLLER BEARING
8		0630 503 010		1	PTO MİL BİLYA SEKMANI	SNAP RING
9		0630 501 031		1	PTO BİLYA KAPAK SEKMANI	RETAINING RING
10		1296 213 032		1	PTO BİLYA KAPAK PİPETİ	OIL DAM
11		1296 313 160		1	PTO BAĞLANTI KAPAĞI	COVER
12	K20.01030	0734 319 559		1	ŞANZ.ARKA KAPAK KEÇESİ	OIL SEAL (55X72X8mm)

P.T.O. (POWER TAKE OFF)

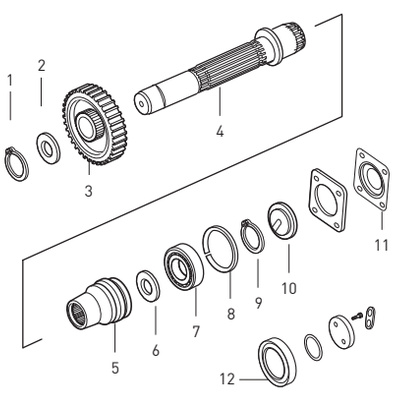

Fig.	Kacmaz No.	Oem No	Oem Old No	Pcs.	Ürün Tanımı	Description
1	K20.01584	1295 298 915		Kit	ŞANZIMAN CONTA TAKIMI	GASKET KIT
2		1313 301 038		1	ŞANZ.ÖN GÖVDE CONTASI	GASKET
3		1313 302 014		1	PRİZ.KEÇE KAPAK CONTASI	GASKET
4		1313 306 012		1	ŞANZ.HİLALİ KAPAK CONTASI	GASKET
5		1313 307 002		1	ŞANZ.ÖN GÖVDE ARKA CONTA	GASKET
5		1313 307 020		2	ŞANZ.KULE KAPAK CONTASI	GASKET
5		1313 307 003		1	ŞANZ.KULE KAPAK CONTASI	GASKET
5		1313 307 004		1	ŞANZ.KULE ALT KAPAK CONTASI	GASKET
5		1313 307 022		1	ŞANZ.KULE ÜST KAPAK CONTASI	GASKET
6		1313 301 037		1	ŞANZ.ARKA GÖVDE CONTASI	GASKET
7		1313 301 036		1	ŞANZ.BİLYA KAPAK CONTASI	GASKET
8	K20.02108	1238 308 201		1	PTO BAĞLANTI KAPAK CONTASI	GASKET
9		1313 307 005		1	ŞANZ.İSTİNAT KAPAK CONTASI	GASKET
10		1313 307 006		1	ŞANZ.İSTİNAT KAPAK CONTASI	GASKET

GEARBOX GASKET KIT

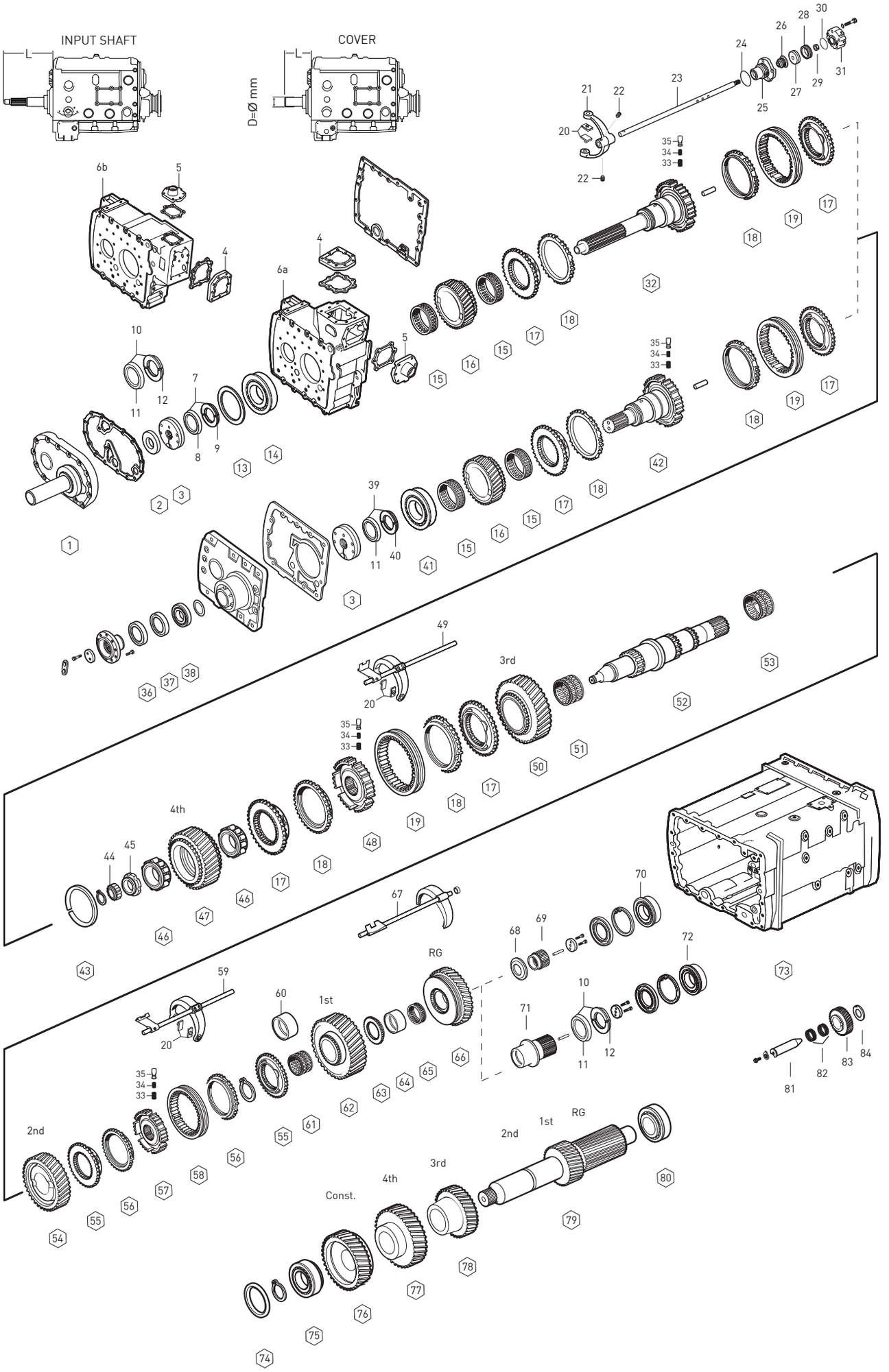

Original parts names, oem numbers, symbols and descriptions used in this catalogue are for reference purposes only.

Fig.	Kacmaz No.	Oem No	Oem Old No	Pcs.	Ürün Tanımı	Description	Sizes	Notes	SG 11.46-0.85	DG 13.68-1.00	SG 14.29-0.82	DG 17.06-1.00
1	K20.00595	1297 302 013		1	PRİZDİREK KEÇE KAPAĞI	COVER	L=170 D=57	A	◆	◆	◆	◆
1	K20.00611	1297 302 239		1	PRİZDİREK KEÇE KAPAĞI	COVER	L=147 D=60	B		◆	◆	
1	K20.00612	1297 302 042		1	PRİZDİREK KEÇE KAPAĞI	COVER	L=170 D=60	CH			◆	
2	K20.01002	0750 111 002		1	PRİZDİREK KEÇESİ	OIL SEAL	48X75X8mm	A (1)	◆	◆	◆	◆
2	K20.01003	0734 310 387	(0734 310 386)	1	PRİZDİREK KEÇESİ	OIL SEAL	55X75X8mm	BCHI (2)	◆	◆	◆	◆
2	K20.01004	0634 310 733		1	PRİZDİREK KEÇESİ	OIL SEAL	90X110X13mm	EFG (3)			◆	◆
3	K20.00484	1295 202 041		1	YAĞ POMPASI	OIL PUMP			◆	◆	◆	◆
4	K20.00561	1295 307 479		1	ŞANZIMAN KULE KAPAĞI	COVER			◆	◆	◆	◆
5	K20.00597	1295 307 434		1	ŞANZIMAN KULE KAPAĞI	COVER			◆	◆	◆	◆
6a		1295 301 289	(1295 301 131)	1	ŞANZIMAN ÖN GÖVDE	HOUSING		ABC	◆	◆	◆	◆
6a		1295 301 293	(1295 301 134)	1	ŞANZIMAN ÖN GÖVDE	HOUSING		H	◆			
6b		1296 301 208		1	ŞANZIMAN ÖN GÖVDE	HOUSING		D	◆			
6b		1296 301 227	(1296 301 228)	1	ŞANZIMAN ÖN GÖVDE	HOUSING		EFG		◆	◆	
6b		1296 301 228		1	ŞANZIMAN ÖN GÖVDE	HOUSING		E				◆
7	K20.01541	1499 298 003		1	EMN.SACI VE P.KİLİT TAK.	SPLIT RING KIT	4.00mm	(4)	◆	◆	◆	◆
7	K20.01543	1499 298 002		1	EMN.SACI VE P.KİLİT TAK.	SPLIT RING KIT	3.90mm	(5)	◆	◆	◆	◆
7	K20.01545	1499 298 001		1	EMN.SACI VE P.KİLİT TAK.	SPLIT RING KIT	3.80mm	(6)	◆	◆	◆	◆
8	K20.01547	0730 062 579		1	KİLİT SEGMAN EMN.SACI	RETAINING RING			◆	◆	◆	◆
9	K20.01542	0730 105 156		2	PARÇALI KİLİT	SPLIT RING	4.00mm		◆	◆	◆	◆
9	K20.01544	0730 105 155		2	PARÇALI KİLİT	SPLIT RING	3.90mm		◆	◆	◆	◆
9	K20.01546	0730 105 154		2	PARÇALI KİLİT	SPLIT RING	3.80mm		◆	◆	◆	◆
10	K20.01638	1499 298 090		1	EMN.SACI VE P.KİLİT TAK.	SPLIT RING KIT	4.30mm	(7)	◆	◆	◆	◆
10	K20.01640	1499 298 114		1	EMN.SACI VE P.KİLİT TAK.	SPLIT RING KIT	4.20mm	(8)	◆	◆	◆	◆
10	K20.01642	1499 298 100		1	EMN.SACI VE P.KİLİT TAK.	SPLIT RING KIT	4.10mm	(9)	◆	◆	◆	◆
10	K20.01548	1499 298 098		2	EMN.SACI VE P.KİLİT TAK.	SPLIT RING KIT	4.00mm	(10)	◆	◆	◆	◆
10	K20.01550	1499 298 096		2	EMN.SACI VE P.KİLİT TAK.	SPLIT RING KIT	3.90mm	(11)	◆	◆	◆	◆
10	K20.01552	1499 298 094		2	EMN.SACI VE P.KİLİT TAK.	SPLIT RING KIT	3.80mm	(12)	◆	◆	◆	◆
11	K20.01554	0730 061 816		2	PARÇALI KİLİT EMN.SACI	RETAINING RING			◆	◆	◆	◆
12	K20.01639	0730 103 244		2	PARÇALI KİLİT	SPLIT RING	4.30mm		◆	◆	◆	◆
12	K20.01641	0730 104 337		2	PARÇALI KİLİT	SPLIT RING	4.20mm		◆	◆	◆	◆
12	K20.01643	0730 103 941		2	PARÇALI KİLİT	SPLIT RING	4.10mm		◆	◆	◆	◆
12	K20.01549	0730 103 939		4	PARÇALI KİLİT	SPLIT RING	4.00mm		◆	◆	◆	◆
12	K20.01551	0730 103 937		4	PARÇALI KİLİT	SPLIT RING	3.90mm		◆	◆	◆	◆
12	K20.01553	0730 103 935		4	PARÇALI KİLİT	SPLIT RING	3.80mm		◆	◆	◆	◆
13	K20.01644	0730 102 504		1	PRİZ.ÖN BİLYA RAYNELİ	SHIM	0.60mm		◆	◆	◆	◆
13	K20.01645	2001645		1	PRİZ.ÖN BİLYA RAYNELİ	SHIM	0.30mm		◆	◆	◆	◆
13	K20.01646	2001646		1	PRİZ.ÖN BİLYA RAYNELİ	SHIM	0.20mm		◆	◆	◆	◆
13	K20.01647	2001647		1	PRİZ.ÖN BİLYA RAYNELİ	SHIM	0.10mm		◆	◆	◆	◆
14	K20.01102	0750 118 130	(0750 118 131)	1	PRİZDİREK ÖN BİLYA	ROLLER BEARING	80X150X27.5mm		◆	◆	◆	◆
15	K20.01317	0735 320 896		2	PRİZDİREK MASURA BİLYA	NEEDLE CAGE	88X96X29mm		◆	◆	◆	◆
16	K20.00048	1297 302 177	(1297 302 070)	1	TAKVİYE DİŞLİSİ 30 DİŞ	CONSTANT GEAR 30 T		ADFHI	◆			

NOTES :

ABCDEFGHI alfabetic letters are used in conjunction with the encoded parts.

(1) With Input Shaft 1297 202 008
(2) With Input Shaft 1297 202 011 - 1295 202 045 - 1297 202 053 - 1297 202 044
(3) With Input Shaft 1297 221 006 - 1297 221 008 - 1297 221 010
(4) This kit includes (1499 298 003) = 2pcs 0730 105 156 + 1pcs 0730 062 579
(5) This kit includes (1499 298 002) = 2pcs 0730 105 155 + 1pcs 0730 062 579
(6) This kit includes (1499 298 001) = 2pcs 0730 105 154 + 1pcs 0730 062 579
(7) This kit includes (1499 298 090) = 2pcs 0730 103 244 + 1pcs 0730 061 816
(8) This kit includes (1499 298 114) = 2pcs 0730 104 337 + 1pcs 0730 061 816
(9) This kit includes (1499 298 100) = 2pcs 0730 103 941 + 1pcs 0730 061 816
(10) This kit includes (1499 298 098) = 2pcs 0730 103 939 + 1pcs 0730 061 816
(11) This kit includes (1499 298 096) = 2pcs 0730 103 937 + 1pcs 0730 061 816
(12) This kit includes (1499 298 094) = 2pcs 0730 103 935 + 1pcs 0730 061 816

NOTLAR :

ABCDEFGHI alfabetik harfler ile kodlanan parçalar birlikte kullanılır.

(1) 1297 202 008 Prizdirekde kullanılır.
(2) 1297 202 011 - 1295 202 045 - 1297 202 053 - 1297 202 044 Prizdireklerde kullanılır.
(3) 1297 221 006 - 1297 221 008 - 1297 221 010 Prizdireklerde kullanılır.
(4) (1499 298 003) nolu kit bu parçalardan oluşur = 2pcs 0730 105 156 + 1pcs 0730 062 579
(5) (1499 298 002) nolu kit bu parçalardan oluşur = 2pcs 0730 105 155 + 1pcs 0730 062 579
(6) (1499 298 001) nolu kit bu parçalardan oluşur = 2pcs 0730 105 154 + 1pcs 0730 062 579
(7) (1499 298 090) nolu kit bu parçalardan oluşur = 2pcs 0730 103 244 + 1pcs 0730 061 816
(8) (1499 298 114) nolu kit bu parçalardan oluşur = 2pcs 0730 104 337 + 1pcs 0730 061 816
(9) (1499 298 100) nolu kit bu parçalardan oluşur = 2pcs 0730 103 941 + 1pcs 0730 061 816
(10) (1499 298 098) nolu kit bu parçalardan oluşur = 2pcs 0730 103 939 + 1pcs 0730 061 816
(11) (1499 298 096) nolu kit bu parçalardan oluşur = 2pcs 0730 103 937 + 1pcs 0730 061 816
(12) (1499 298 094) nolu kit bu parçalardan oluşur = 2pcs 0730 103 935 + 1pcs 0730 061 816

Original parts names, oem numbers, symbols and descriptions used in this catalogue are for reference purposes only.

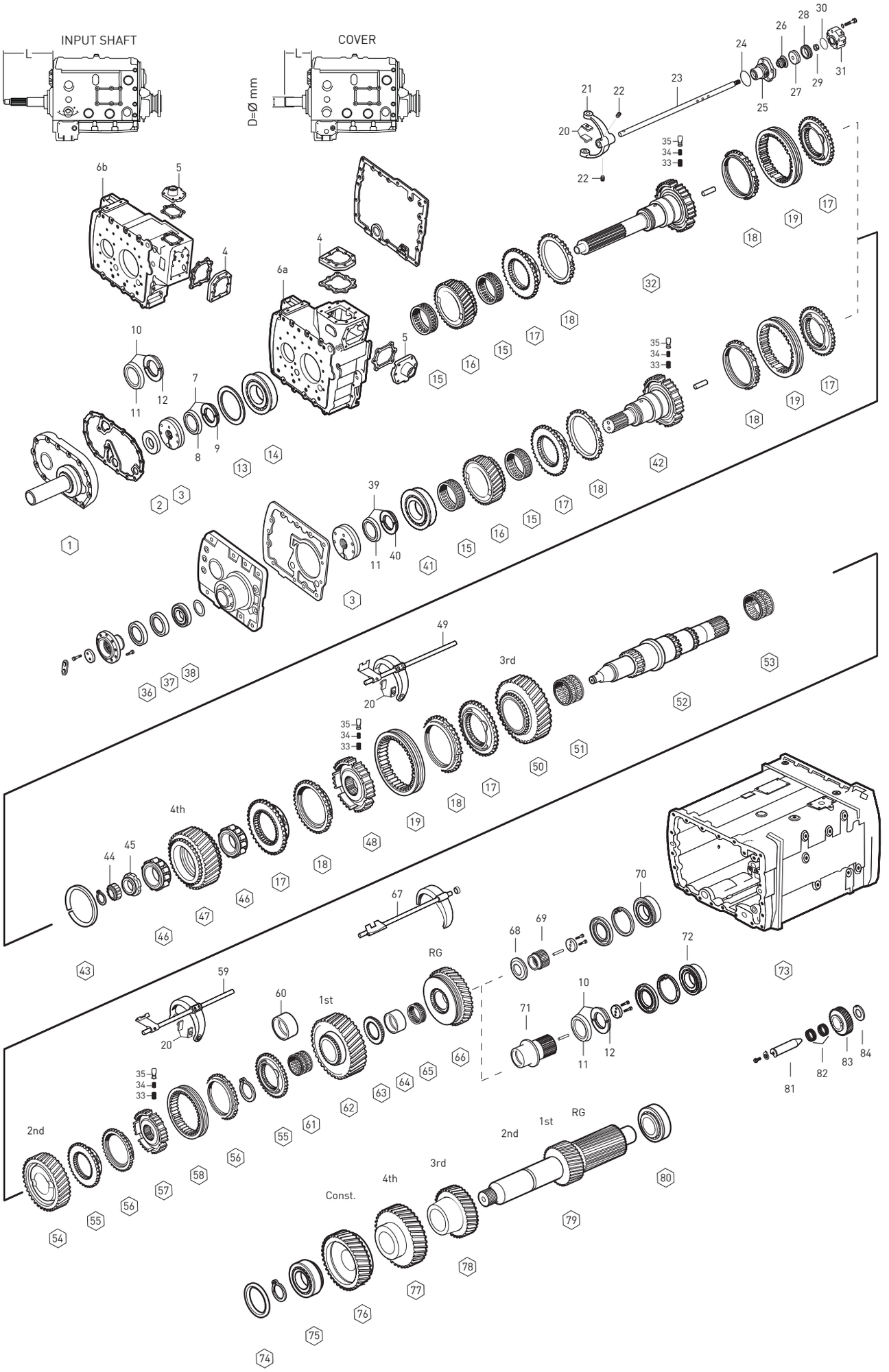

Original parts names, oem numbers, symbols and descriptions used in this catalogue are for reference purposes only.

Fig.	Kacmaz No.	Oem No	Oem Old No	Pcs.	Ürün Tanımı	Description	Sizes	Notes	SG 11.46-0.85	DG 13.68-1.00	SG 14.29-0.82	DG 17.06-1.00
16	K20.00049	1297 302 176	(1297 302 071)	1	TAKVİYE DİŞLİSİ 28 DİŞ	CONSTANT GEAR 28 T		ABEH		◆		
16	K20.00050	1297 302 250	(1297 302 111)	1	TAKVİYE DİŞLİSİ 29 DİŞ	CONSTANT GEAR 29 T		ABCEFGHI			◆	
16	K20.00051	1297 302 241	(1297 302 079)	1	TAKVİYE DİŞLİSİ 26 DİŞ	CONSTANT GEAR 26 T		AEHI				◆
17a	K20.00019	1295 304 278		4	3./ 4.VİT.TAK.SENKROMENÇ	ENGAGING RING			◆	◆	◆	◆
17b	K20.00304	1297 304 041		4	3./ 4.VİT.TAK.SENKROMENÇ	ENGAGING RING			◆	◆	◆	◆
18	K20.00021	1304 304 686	(1295 304 004)	4	3./ 4.VİT.TAK.FRENLEME	SYNCHRONIZING CONE			◆	◆	◆	◆
19	K20.00020	1295 304 002		2	3./ 4.VİT.TAK.SENK.HALKA	ENGAGING SLEEVE			◆	◆	◆	◆
20	K20.00186	1295 306 132		6	TAKVİYE HİLAL PABUCU	SLIDING PAD			◆	◆	◆	◆
21		1313 312 002		1	TAKVİYE HİLALİ	G.SHIFT FORK			◆	◆	◆	◆
22	K20.01688	1315 312 047		2	TAKVİYE HİLAL VİDASI	SCREW	M12X1.0mm		◆	◆	◆	◆
23		1297 312 008		1	TAKVİYE HİLAL MİLİ	G.SHIFT RAIL			◆	◆	◆	◆
24		0634 313 671		1	TAKVİYE SİLİNDİR ORİNGİ	O-RING	80.0X3.0mm		◆	◆	◆	◆
25	K20.01738	1296 312 042	(1296 312 016)	1	TAKVİYE SİLİNDİR GÖVDESİ	CYLINDER			◆	◆	◆	◆
26	K20.01016	0750 112 034		1	TAKVİYE HİLAL MİL KEÇESİ	FLANGE PACKING	25.0X38.0X14.2mm		◆	◆	◆	◆
27		1296 312 053	(1296 312 047)	1	TAKVİYE HİLAL MİL PİSTONU	PISTON			◆	◆	◆	◆
28	K20.01021	0750 112 089		1	TAKVİYE HAVA KEÇESİ	DOUBLE PACKING	53.0X63.0X16.2mm		◆	◆	◆	◆
29	K20.01774	0737 006 095		1	TAKVİYE HİLAL MİL SOMUNU	NUT	M16X1.5mm		◆	◆	◆	◆
30		0634 314 018		1	TAKVİYE SİLİNDİR ORİNGİ	O-RING	59.0X2.0mm		◆	◆	◆	◆
31		0750 132 033		1	TAKVİYE VENTİLİ	5/2 WAY VALVE			◆	◆	◆	◆
32	K20.00040	1297 202 008	(1297 202 026)	1	PRİZDİREK	INPUT SHAFT	L=295 SAE 1 3/4	A	◆	◆	◆	◆
32	K20.00041	1297 202 011		1	PRİZDİREK	INPUT SHAFT	L=286 SAE 2	B		◆	◆	
32	K20.00042	1297 202 045		1	PRİZDİREK	INPUT SHAFT	L=295 SAE 2	C			◆	
32	K20.00043	1297 202 061	(1297 221 002)	1	PRİZDİREK	INPUT SHAFT	L=232	D	◆			
32	K20.00045	1297 221 006		1	PRİZDİREK	INPUT SHAFT	L=345.6 SAE 1 3/4	E		◆	◆	◆
32	K20.00046	1297 221 008		1	PRİZDİREK	INPUT SHAFT	L=367.6 SAE 1 3/4	F			◆	
32	K20.00047	1297 221 010		1	PRİZDİREK	INPUT SHAFT	L=367.6 SAE 2	G			◆	
32	K20.00564	1297 202 053	(1297 302 231)	1	PRİZDİREK	INPUT SHAFT	L=320 SAE 2	H	◆	◆	◆	◆
33	K20.00469	0732 040 385		9	PRİZ.ve YILDIZ DİŞLİ YAYI	SPRING			◆	◆	◆	◆
34	K20.00470	0732 040 386		9	PRİZ.ve YILDIZ DİŞLİ YAYI	SPRING			◆	◆	◆	◆
35	K20.00471	1240 304 278		9	PRİZ.ve YILDIZ DİŞLİ FİŞEĞİ	PRESSURE PIECE			◆	◆	◆	◆
36	K20.01005	0734 300 140		1	PRİZDİREK KEÇESİ	OIL SEAL	70X90X10mm	I	◆			◆
37	K20.01006	0634 310 648		1	PRİZDİREK KEÇESİ	OIL SEAL	70X90X10mm	I	◆			◆
38	K20.01131	0750 117 651		1	ŞANZIMAN KAPAK BİLYASI	ROLLER BEARING	50X90X24.7mm	I	◆			◆
39	K20.01555	1499 298 129		1	EMN.SACI VE P.KİLİT TAK.	SIPLIT RING KIT	4.00mm	I (13)	◆			◆
39	K20.01557	1499 298 127		1	EMN.SACI VE P.KİLİT TAK.	SIPLIT RING KIT	3.90mm	I (14)	◆			◆
39	K20.01559	1499 298 125		1	EMN.SACI VE P.KİLİT TAK.	SIPLIT RING KIT	3.80mm	I (15)	◆			◆
40	K20.01556	0730 106 162		2	PARÇALI KİLİT	SIPLIT RING	4.00mm	I	◆			◆
40	K20.01558	0730 106 160		2	PARÇALI KİLİT	SIPLIT RING	3.90mm	I	◆			◆
40	K20.01560	0730 106 158		2	PARÇALI KİLİT	SIPLIT RING	3.80mm	I	◆			◆
41	K20.01103	0750 117 431		1	PRİZDİREK ÖN BİLYA	ROLLER BEARING	75X150X30.5mm	I	◆			◆
42	K20.00044	1297 202 044		1	PRİZDİREK (Kısa Tip)	INPUT SHAFT (Short Type)		I	◆			◆

NOTES :

ABCDEFGHI alfabetic letters are used in conjunction with the encoded parts.

(12) This kit includes (1499 298 129) = 2pcs 0730 106 162 + 1pcs 0730 061 816
(13) This kit includes (1499 298 127) = 2pcs 0730 106 160 + 1pcs 0730 061 816
(14) This kit includes (1499 298 125) = 2pcs 0730 106 158 + 1pcs 0730 061 816

NOTLAR :

ABCDEFGHI alfabetik harfler ile kodlananparçalar birlikte kullanılır.

(12) (1499 298 129) nolu kit bu parçalardan oluşur = 2pcs 0730 106 162 + 1pcs 0730 061 816
(13) (1499 298 127) nolu kit bu parçalardan oluşur = 2pcs 0730 106 160 + 1pcs 0730 061 816
(14) (1499 298 125) nolu kit bu parçalardan oluşur = 2pcs 0730 106 158 + 1pcs 0730 061 816

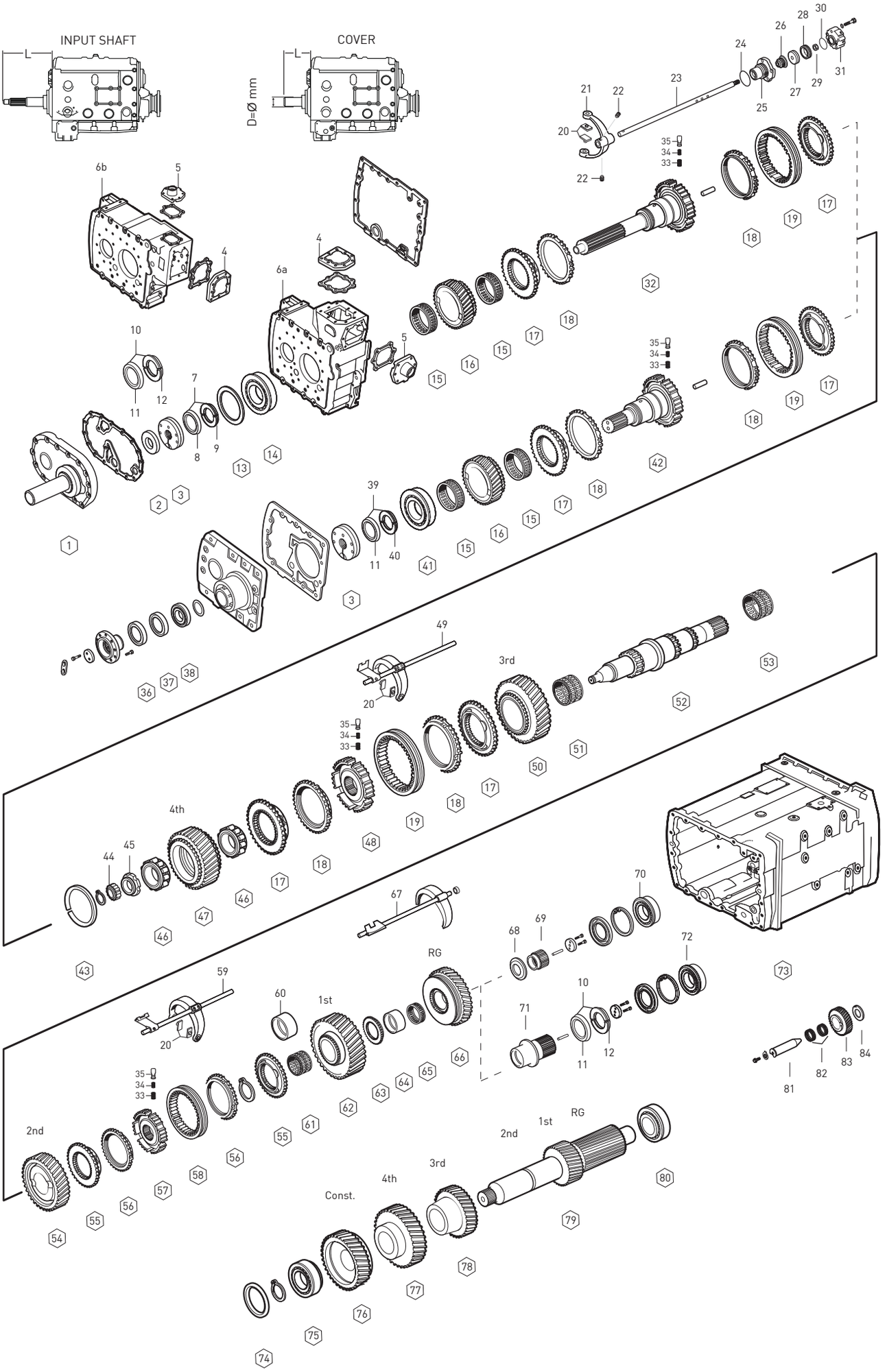

Original parts names, oem numbers, symbols and descriptions used in this catalogue are for reference purposes only.

Fig.	Kacmaz No.	Oem No	Oem Old No	Pcs.	Ürün Tanımı	Description	Sizes	Notes	SG 11.46-0.85	DG 13.68-1.00	SG 14.29-0.82	DG 17.06-1.00
43	K20.01518	0730 003 518		1	SENKROMENÇ AYAR SEKMANI	RING	6.30mm		◆	◆	◆	◆
43	K20.01519	0730 003 517		1	SENKROMENÇ AYAR SEKMANI	RING	6.00mm		◆	◆	◆	◆
43	K20.01520	0730 003 161		1	SENKROMENÇ AYAR SEKMANI	RING	5.10mm		◆	◆	◆	◆
43	K20.01521	0730 003 159		1	SENKROMENÇ AYAR SEKMANI	RING	4.50mm		◆	◆	◆	◆
43	K20.01522	0730 004 237		1	SENKROMENÇ AYAR SEKMANI	RING	4.00mm		◆	◆	◆	◆
44	K20.01108	0750 118 038		1	KAMALI MİL UÇ BİLYA	ROLLER BEARING	35X68X27.5mm		◆	◆	◆	◆
45	K20.00485	0737 502 092		1	KAMALI MİL SOMUNU	NUT	M60X1.5mm		◆	◆	◆	◆
46	K20.01111	0750 118 220	(0735 455 248)	2	4.VİTES DİŞLİ BİLYASI	ROLLER BEARING	63X97.5X37.5mm		◆	◆	◆	◆
47	K20.00063	1297 304 267	(1297 304 025)	1	4.VİTES DİŞLİSİ 28 DİŞ	GEAR 4th 28 T		ADFHI	◆			
47	K20.00064	1297 304 260	(1297 304 026)	1	4.VİTES DİŞLİSİ 30 DİŞ	GEAR 4th 30 T		ABEH		◆		
47	K20.00065	1297 304 318	(1297 304 175)	1	4.VİTES DİŞLİSİ 26 DİŞ	GEAR 4th 26 T		ABCEFGHI			◆	
47	K20.00066	1297 304 413	(1297 304 285)	1	4.VİTES DİŞLİSİ 29 DİŞ	GEAR 4th 29 T		AEHI				◆
48	K20.00025	1297 304 031		1	3./ 4.VİT.TAK.YILDIZ DİŞLİ	GUIDE SLEEVE			◆	◆	◆	◆
49		1297 206 115	(1297 206 088)	1	3./4.VİTES HİLALİ	GEAR SHIT FORK 3rd/4th			◆			
49		1297 206 103	(1297 206 049)	1	3./4.VİTES HİLALİ	GEAR SHIT FORK 3rd/4th				◆	◆	
49		1297 206 104	(1297 206 050)	1	3./4.VİTES HİLALİ	GEAR SHIT FORK 3rd/4th						◆
50	K20.00067	1297 304 266	(1297 304 019)	1	3.VİTES DİŞLİSİ 32 DİŞ	GEAR 3rd 32 T		ABCDEFGH	◆		◆	
50	K20.00068	1297 304 261	(1297 304 020)	1	3.VİTES DİŞLİSİ 34 DİŞ	GEAR 3rd 34 T		ABEH		◆		
50	K20.00077	1297 304 414	(1297 304 122)	1	3.VİTES DİŞLİSİ 34 DİŞ	GEAR 3rd 34 T		AEHI				◆
51	K20.01313	0735 320 451		1	3.VİT.DİŞLİ MASURA BİLYA	NEEDLE CAGE	82X90X60mm		◆	◆	◆	◆
52	K20.00407	1297 304 181		1	KAMALI MİL	MAIN SHAFT		ABDEHI	◆	◆		
52	K20.00408	1297 304 193		1	KAMALI MİL	MAIN SHAFT		ABCEFGHI			◆	◆
53	K20.01318	0735 320 452		1	2.VİT. DİŞLİ MASURA BİLYA	NEEDLE CAGE	82X90X55mm		◆	◆	◆	◆
54	K20.00069	1297 304 269	(1297 304 016)	1	2.VİTES DİŞLİSİ 37 DİŞ	GEAR 2nd 37 T		ABCDEFGHI	◆		◆	
54	K20.00070	1297 304 442	(1297 304 017)	1	2.VİTES DİŞLİSİ 38 DİŞ	GEAR 2nd 38 T		ABEHI		◆		◆
55	K20.00032	1297 304 196		2	1./ 2.VİT.SENKROMENÇ	ENGAGING RING			◆	◆	◆	◆
56	K20.00346	1296 304 135	(1246 304 278)	2	1./ 2. VİT.SENK.FRENLEME	SYNCHRONIZING CONE			◆	◆	◆	◆
57	K20.00071	1297 304 195		1	1./ 2.VİT.YILDIZ DİŞLİ	GUIDE SLEEVE			◆	◆	◆	◆
58	K20.00034	1257 304 020	(1250 304 160)	1	1./ 2.VİT.SENK. HALKA	ENGAGING SLEEVE			◆	◆	◆	◆
59		1297 206 114	(1297 206 087)	1	1./2.VİTES HİLALİ	GEAR SHIT FORK 1st/2nd			◆			
59		1297 206 106	(1297 206 058)	1	1./2.VİTES HİLALİ	GEAR SHIT FORK 1st/2nd				◆	◆	
59		1297 206 105	(1297 206 057)	1	1./2.VİTES HİLALİ	GEAR SHIT FORK 1st/2nd						◆
60	K20.00409	1297 304 035		1	1.VİTES MAS.BİL.ÇANAĞI	BEARING RACE			◆	◆	◆	◆
61	K20.01319	0735 320 487		1	1.VİTES MASURA BİLYA	NEEDLE CAGE	82X90X68mm		◆	◆	◆	◆
62	K20.00410	1297 304 270	(1297 304 153)	1	1.VİTES DİŞİLİSİ 44 DİŞ	GEAR 1st 44 T		ABCDEFGHI	◆		◆	
62	K20.00411	1297 304 441	(1297 304 152)	1	1.VİTES DİŞİLİSİ 47 DİŞ	GEAR 1st 47 T		ABEHI		◆		◆
63	K20.00412	1297 304 154		1	GERİ VİTES YILDIZ DİŞLİ	GUIDE SLEEVE			◆	◆	◆	◆
64	K20.00413	1297 304 034		1	GERİ VİT.MAS.BİL.ÇANAĞI	BEARING RACE			◆	◆		
65	K20.01320	0735 320 486		1	GERİ VİTES MASURA BİLYA	NEEDLE CAGE	78X86X44mm		◆	◆	◆	◆
66	K20.00414	1297 304 149		1	GERİ VİTES DİŞLİSİ 39 DİŞ	REVERSE GEAR 39 T		ABCDEFGHI	◆		◆	
66	K20.00415	1297 304 148		1	GERİ VİTES DİŞLİSİ 38 DİŞ	REVERSE GEAR 38 T		ABEHI		◆		◆

NOTES :

ABCDEFGHI alfabetic letters are used in conjunction with the encoded parts.

NOTLAR :

ABCDEFGHI alfabetik harfler ile kodlananparçalar birlikte kullanılır.

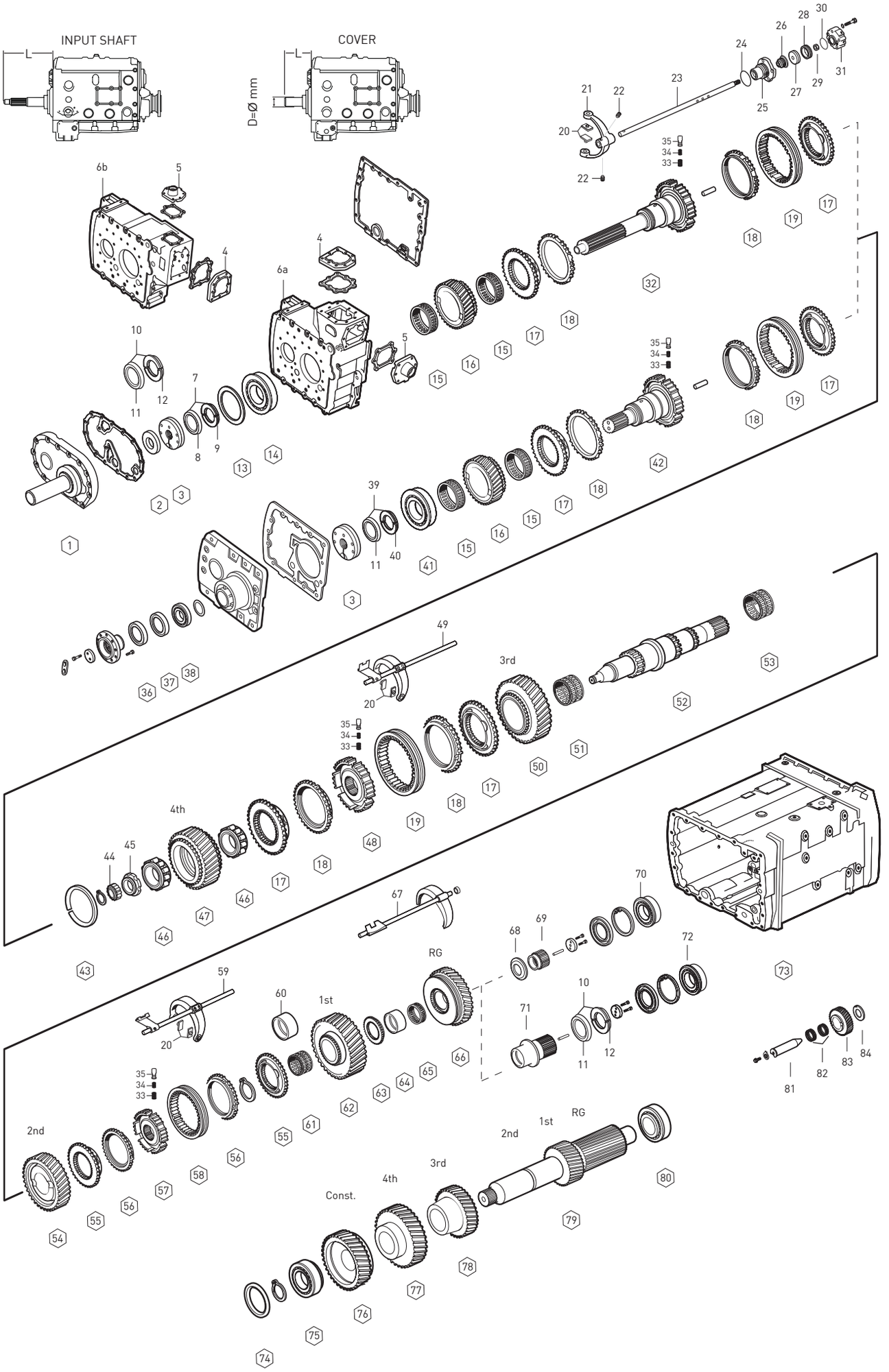

Original parts names, oem numbers, symbols and descriptions used in this catalogue are for reference purposes only.

Fig.	Kacmaz No.	Oem No	Oem Old No	Pcs.	Ürün Tanımı	Description	Sizes	Notes	SG 11.46-0.85	DG 13.68-1.00	SG 14.29-0.82	DG 17.06-1.00
67		1297 206 179	(1297 206 168)	1	GERİ VİTES HİLALİ	GEAR SHIT FORK/RG			◆			
67		1297 206 174	(1297 206 162)	1	GERİ VİTES HİLALİ	GEAR SHIT FORK/RG				◆	◆	
67		1297 206 175	(1297 206 163)	1	GERİ VİTES HİLALİ	GEAR SHIT FORK/RG						◆
68	K20.01526	1297 304 381	(1297 304 176)	1	GERİ VİTES DİŞLİ PULU	THRUST WASHER		ABEHI	◆	◆		
69	K20.00072	1297 304 187		1	GÜNEŞ DİŞLİ 27 DİŞ	SUN GEAR 27 T		ABEHI	◆	◆		
70	K20.01116	0750 118 135	(0750 118 006)	1	GÜNEŞ DİŞLİ BİLYASI	ROLLER BEARING	65X140X33mm	ABDEHI	◆	◆		
71	K20.00073	1297 304 439	(1297 304 192)	1	GÜNEŞ DİŞLİ 24 DİŞ	SUN GEAR 24 T		ABCEFGHI	◆	◆	◆	◆
72	K20.01117	0750 118 180		1	GÜNEŞ DİŞLİ BİLYASI	ROLLER BEARING	80X140X33mm	ABCEFGHI			◆	◆
73		1297 301 146	(1297 301 105)	1	ŞANZIMAN ORTA GÖVDE	HOUSING			◆	◆	◆	◆
			(1297 301 148)									
			(1297 301 106)									
74	K20.01648	0730 102 099		1	GRUP MİLİ ÖN BİLYA RAYNELİ	SHIM	3.00mm		◆	◆	◆	◆
74	K20.01649	0730 102 060		1	GRUP MİLİ ÖN BİLYA RAYNELİ	SHIM	2.60mm		◆	◆	◆	◆
74	K20.01650	0730 102 068		1	GRUP MİLİ ÖN BİLYA RAYNELİ	SHIM	2.20mm		◆	◆	◆	◆
74	K20.01651	0730 102 075		1	GRUP MİLİ ÖN BİLYA RAYNELİ	SHIM	1.85mm		◆	◆	◆	◆
74	K20.01652	2001652		1	GRUP MİLİ ÖN BİLYA RAYNELİ	SHIM	0.30mm		◆	◆	◆	◆
74	K20.01653	2001653		1	GRUP MİLİ ÖN BİLYA RAYNELİ	SHIM	0.20mm		◆	◆	◆	◆
74	K20.01654	2001654		1	GRUP MİLİ ÖN BİLYA RAYNELİ	SHIM	0.10mm		◆	◆	◆	◆
75	K20.01124	0750 117 010	(0750 117 030)	1	GRUP MİLİ ÖN BİLYA	ROLLER BEARING	50.8X100X35mm		◆	◆	◆	◆
76	K20.00052	1297 303 074	(1297 303 040)	1	OVARD.DİŞLİ KARŞ.31 DİŞ	CONSTANT GEAR 31 T		ADHI	◆			
76	K20.00053	1297 303 066	(1297 303 039)	1	OVARD.DİŞLİ KARŞ.34 DİŞ	CONSTANT GEAR 34 T		ABEH		◆		
76	K20.00054	1297 303 098	(1297 303 051)	1	OVARD.DİŞLİ KARŞ.32 DİŞ	CONSTANT GEAR 32 T		ABCEFGHI			◆	
76	K20.00055	1297 303 086	(1297 303 043)	1	OVARD.DİŞLİ KARŞ.35 DİŞ	CONSTANT GEAR 35 T		AEHI				◆
77	K20.00059	1297 303 072	(1297 303 025)	1	4.VİTES DİŞLİ KARŞ.34 DİŞ	GEAR 4th 34 T		ADHI	◆			
77	K20.00062	1297 303 065	(1297 303 026)	1	4.VİTES DİŞLİ KARŞ.31 DİŞ	GEAR 4th 31 T		ABEH		◆		
77	K20.00060	1297 303 097	(1297 303 050)	1	4.VİTES DİŞLİ KARŞ.35 DİŞ	GEAR 4th 35 T		ABCEFGHI			◆	
77	K20.00061	1297 303 123	(1297 303 041)	1	4.VİTES DİŞLİ KARŞ.32 DİŞ	GEAR 4th 32 T		AEHI				◆
78	K20.00056	1297 303 073	(1297 303 010)	1	3.VİTES DİŞLİ KARŞ.28 DİŞ	GEAR 3rd 28 T		ABCDEFGHI	◆		◆	
78	K20.00057	1297 303 067	(1297 303 009)	1	3.VİTES DİŞLİ KARŞ.25 DİŞ	GEAR 3rd 25 T		ABEH		◆		
78	K20.00058	1297 303 132	(1297 303 042)	1	3.VİTES DİŞLİ KARŞ.26 DİŞ	GEAR 3rd 26 T		AEHI				◆
79	K20.00416	1297 303 075	(1297 303 054)	1	GRUP MİLİ 19-23 DİŞ	COUNTER SHAFT 19-23 T		ABCDEFGHI	◆		◆	
79	K20.00076	1297 303 140	(1297 303 064)	1	GRUP MİLİ 17-20 DİŞ	COUNTER SHAFT 17-20 T		ABEHI		◆		◆
80	K20.01126	0750 117 009		1	GRUP MİLİ ARKA BİLYA	ROLLER BEARING	49.2X103.1X43.6mm		◆	◆	◆	◆
81	K20.00598	1295 305 056	(1295 305 008)	1	KÜÇÜK GERİ VİTES PİMİ	PIN			◆	◆	◆	◆
			(1295 305 057)									
82	K20.01335	0750 115 011	(0735 320 042)	2	KÜÇÜK GERİ VİT.MAS.BİLYA	NEEDLE CAGE	40.0X60.0X26.0mm		◆	◆	◆	◆
83	K20.00600	1295 305 052		1	KÜÇÜK GERİ VİTES	REV.IDLER GEAR				◆		◆
83	K20.00601	1295 305 051		1	KÜÇÜK GERİ VİTES	REV.IDLER GEAR			◆		◆	
84	K20.01655	0730 150 064		1	KÜÇÜK GERİ VİTES PULU	THRUST WASHER			◆	◆	◆	◆

NOTES :
ABCDEFGHI alfabetic letters are used in conjunction with the encoded parts.

NOTLAR :
ABCDEFGHI alfabetik harfler ile kodlananparçalar birlikte kullanılır.

Original parts names, oem numbers, symbols and descriptions used in this catalogue are for reference purposes only.

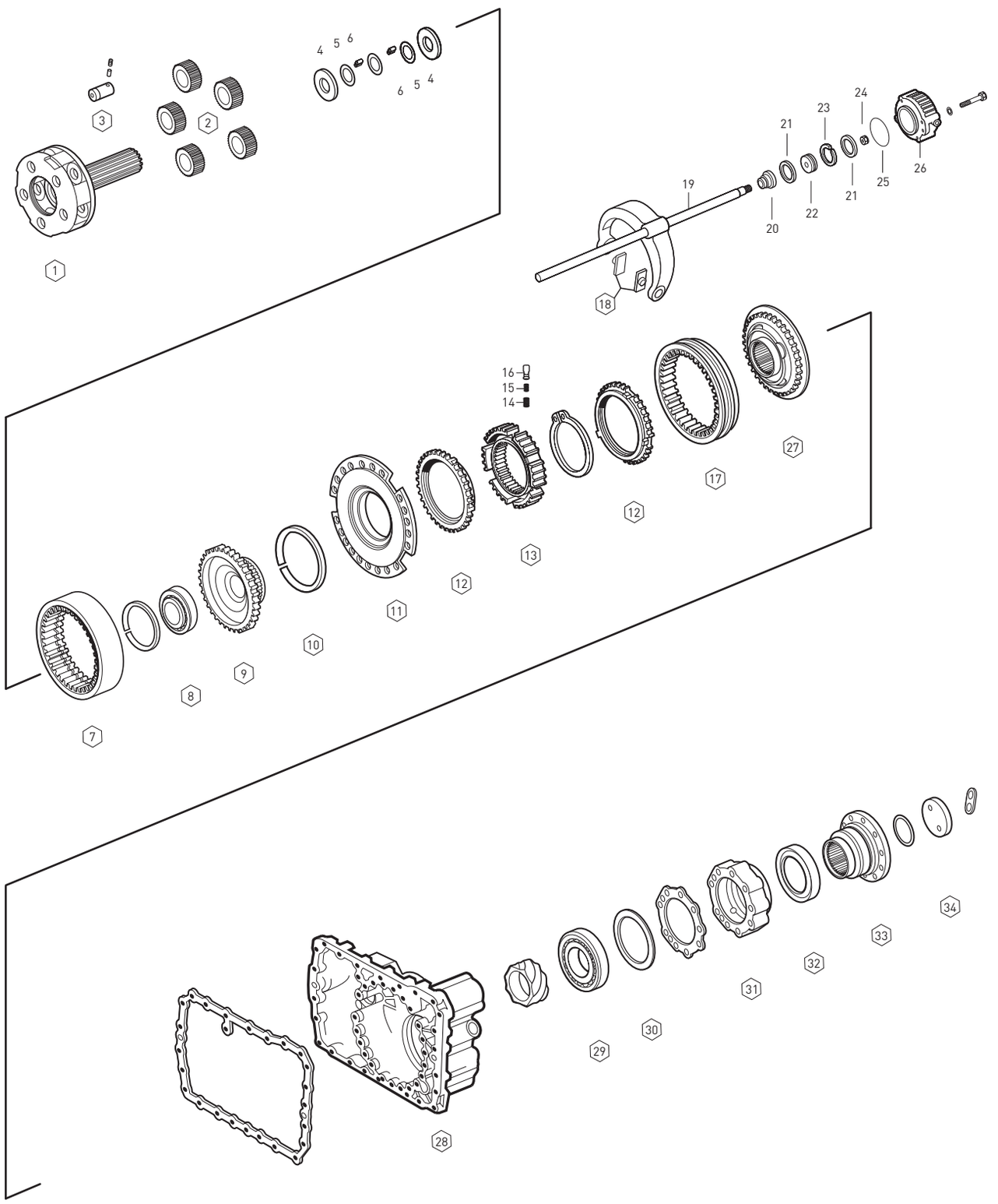

Original parts names, oem numbers, symbols and descriptions used in this catalogue are for reference purposes only.

Fig.	Kacmaz No.	Oem No	Oem Old No	Pcs.	Ürün Tanımı	Description	Sizes	Not	SG 11.46-0.85	DG 13.68-1.00	SG 14.29-0.82	DG 17.06-1.00
1	K20.00613	1297 232 039	(1297 232 027)	1	ŞANZIMAN HEYKELİ	PLANETARY CARRIER		A	◆	◆		
1	K20.00603	1297 232 045	(1297 232 026)	1	ŞANZIMAN HEYKELİ	PLANETARY CARRIER		B			◆	◆
2	K20.00118	1297 232 023	(1297 332 022)	5	HEYKEL KOZA DİŞLİ TAKIMI	PLANETARY GEAR SET		A	◆	◆		
2	K20.00417	1297 232 024	(1297 332 028)	5	HEYKEL KOZA DİŞLİ TAKIMI	PLANETARY GEAR SET		B			◆	◆
3	K20.00418	1297 332 109	(1297 332 005)	5	HEYKEL KOZA DİŞLİ PİMİ	PLANET SHAFT			◆	◆	◆	◆
4	K20.01511	0501 306 212		10	HEYKEL KOZA DİŞLİ PULU	THRUST WASHER			◆	◆	◆	◆
5	K20.01512	0730 103 846		15	HEYKEL KOZA DİŞLİ PULU	THRUST WASHER			◆	◆	◆	◆
6	K20.01453	0750 119 143	(0750 119 109)	120	HEYKEL KOZA DİŞ.TANE BİLYA	NEEDLE ROLLER	10X16.8mm		◆	◆	◆	◆
7	K20.00614	1297 332 080	(1297 332 036)	1	ÇEMBER DİŞLİ	RING WHEEL		A	◆	◆		
7	K20.00605	1295 332 086		1	ÇEMBER DİŞLİ 86 DİŞ	RING WHEEL 86 T		B			◆	◆
8	K20.01133	0750 116 165	(0635 338 049)	1	PLANET ÇAN DİŞLİ BİLYASI	ROLLER BEARING	80X110X16mm		◆	◆	◆	◆
9	K20.00615	1297 332 017		1	PLANET ÇAN DİŞLİ	CARRIER HUB		A	◆	◆		
9	K20.00607	1297 332 035		1	PLANET ÇAN DİŞLİ 86 DİŞ	CARRIER HUB 86 T		B			◆	◆
10	K20.01656	0730 505 056	(0730 505 055)	1	ÇEMBER DİŞLİ SEGMANI	SPRING RING	3.20mm		◆	◆	◆	◆
11	K20.00007	1296 233 006		1	TEPSİ SENKROMENÇ	FLANGE			◆	◆	◆	◆
12	K20.00038	1296 333 045	(1296 333 022)	2	AĞIR SERİ SENK.FRENLEME	SYNCHRONIZING CONE			◆	◆	◆	◆
13	K20.00363	1296 333 002		1	AĞIR SERİ YILDIZ DİŞLİ	GUIDE SLEEVE			◆	◆	◆	◆
14	K20.00469	0732 040 385		9	AĞIR SERİ YILDIZ DİŞLİ YAYI	SPRING			◆	◆	◆	◆
15	K20.00470	0732 040 386		9	AĞIR SERİ YILDIZ DİŞLİ YAYI	SPRING			◆	◆	◆	◆
16	K20.00471	1240 304 278		9	AĞIR SERİ YILDIZ DİŞLİ FİŞEĞİ	PRESSURE PIECE			◆	◆	◆	◆
17	K20.00039	1296 333 023	(0769 186 286)	1	AĞIR SERİ SENK. HALKA	ENGAGING SLEEVE			◆	◆	◆	◆
18	K20.00341	1296 334 004		2	AĞIR SERİ HİLAL PABUCU	SLIDING PAD			◆	◆	◆	◆
19		1312 234 002		1	AĞIR SERİ HİLALİ	GEAR SHIFT FORK			◆	◆	◆	◆
20	K20.01016	0750 112 034		1	AĞIR SERİ HİLAL MİL KEÇESİ	FLANGE PACKING	25.0X38.0X14.2mm		◆	◆	◆	◆
21	K20.01024	0734 317 150	(0750 112 019)	2	AĞIR SERİ HAVA KEÇESİ	SEALING RING	80.0X90.0X4.8mm		◆	◆	◆	◆
22		1296 334 039		1	AĞIR SERİ HİLAL MİL PİSTONU	PISTON			◆	◆	◆	◆
23	K20.01657	0750 112 066		1	AĞIR SERİ HİLAL MİL FİBERİ	GUIDE RING			◆	◆	◆	◆
24	K20.01774	0737 006 095		1	AĞIR SERİ HİLAL MİL SOMUNU	NUT	M16X1.5mm		◆	◆	◆	◆
25		0634 314 019		1	AĞIR SERİ SİLİNDİR ORİNGİ	O-RING	94.0X3.0mm		◆	◆	◆	◆
26	K20.00845	1295 334 075		1	AĞIR SERİ SİLİNDİR GÖVDESİ	CYLINDER			◆	◆	◆	◆
27	K20.00006	1313 233 001	(1297 233 018)	1	SERİ SENKROMENÇ	ENGAGING RING	38spl.		◆	◆	◆	◆
28		1296 301 133		1	ŞANZIMAN ARKA GÖVDE	HOUSING			◆	◆	◆	◆
29	K20.01134	0750 116 394	(0750 116 002)	1	ŞANZIMAN KUTU BİLYASI	ROLLER BEARING	90X160X30mm		◆	◆	◆	◆
30	K20.01658	0730 100 115		1	ŞANZ.ARKA BİLYA RAYNELİ	SHIM	0.30mm		◆	◆	◆	◆
30	K20.01659	0730 100 116		1	ŞANZ.ARKA BİLYA RAYNELİ	SHIM	0.20mm		◆	◆	◆	◆
30	K20.01660	2001660		1	ŞANZ.ARKA BİLYA RAYNELİ	SHIM	0.10mm		◆	◆	◆	◆
31		1295 231 001		1	ŞANZ.ARKA BİLYA KAPAĞI	BEARING COVER			◆	◆	◆	◆
32	K20.01013	0750 111 341		1	ŞANZ.ARKA KAPAK KEÇESİ	OIL SEAL	105.0X130.0X12mm		◆	◆	◆	◆
33	K20.00371	1297 338 010		1	ŞANZIMAN FLANŞI	COMPANION FLANGE	10-H,Ø180mm		◆	◆	◆	◆
33	K20.00429	1297 338 038		1	ŞANZIMAN FLANŞI	COMPANION FLANGE	10-H,Ø180mm		◆	◆	◆	◆
34	K20.01661	1295 332 051		1	ŞANZIMAN FLANŞ PULU	WASHER			◆	◆	◆	◆

NOTES :

A : Alphabetical letters used in conjunction with these products are classified.
B : Alphabetical letters used in conjunction with these products are classified.

NOTLAR :

A : Alfabetik harf ile sınıflandırılan ürünler, birlikte kullanılır.
B : Alfabetik harf ile sınıflandırılan ürünler, birlikte kullanılır.

Original parts names, oem numbers, symbols and descriptions used in this catalogue are for reference purposes only.

SYNCHRONIZER KIT INPUT SHAFT

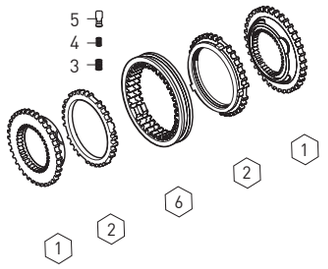

Fig.	Kacmaz No.	Oem No	Oem Old No	Pcs.	Ürün Tanımı	Description
	K20.00486	1295 298 936		Kit	TAKVİYE SENKROMENÇ KİT	SYNCHRONIZER KIT Const
1	K20.00019	1295 304 278		2	TAKVİYE SENKROMENÇ	ENGAGING RING
2	K20.00021	1304 304 686	(1295 304 004)	2	TAKVİYE SENK.FRENLEME	SYNCHRONIZING CONE
3	K20.00469	0732 040 385		3	TAKVİYE YILDIZ DİŞLİ YAYI	SPRING
4	K20.00470	0732 040 386		3	TAKVİYE YILDIZ DİŞLİ YAYI	SPRING
5	K20.00471	1240 304 278		3	TAK.YILDIZ DİŞLİ FİŞEĞİ	PRESSURE PIECE
6	K20.00020	1295 304 002		1	TAKVİYE SENK.HALKA	ENGAGING SLEEVE

SYNCHRONIZER KIT 3rd/4th

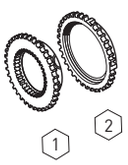

Fig.	Kacmaz No.	Oem No	Oem Old No	Pcs.	Ürün Tanımı	Description
	K20.00487	1297 204 062		Kit	PRİZ.SENKROMENÇ KİT	SYNCH.KIT 3rd/4th
1	K20.00019	1295 304 278		1	PRİZ.SENKROMENÇ	ENGAGING RING
2	K20.00021	1304 304 686	(1295 304 004)	1	PRİZ.SENK.FRENLEME	SYNCHRONIZING CONE

SYNCHRONIZER KIT 3rd/4th

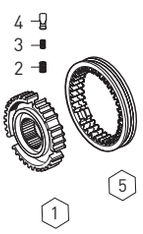

Fig.	Kacmaz No.	Oem No	Oem Old No	Pcs.	Ürün Tanımı	Description
	K20.00488	1297 204 030		Kit	3./4.VİT.HALKA YILDIZ KİTİ	SYNCH.KIT 3rd/4th
1	K20.00025	1297 304 031		1	3./4.VİT.YILDIZ DİŞLİ	GUIDE SLEEVE
2	K20.00469	0732 040 385		3	3./4.VİT.YILDIZ DİŞLİ YAYI	SPRING
3	K20.00470	0732 040 386		3	3./4.VİT.YILDIZ DİŞLİ YAYI	SPRING
4	K20.00471	1240 304 278		3	3./4.VİT.YILDIZ DİŞLİ FİŞEĞİ	PRESSURE PIECE
5	K20.00020	1295 304 002		1	3./4.VİT.SENK.HALKA	ENGAGING SLEEVE

SYNCHRONIZER KIT 3rd/4th

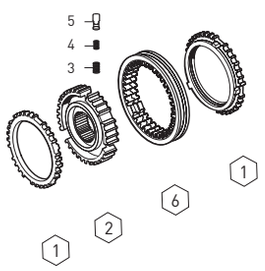

Fig.	Kacmaz No.	Oem No	Oem Old No	Pcs.	Ürün Tanımı	Description
	K20.00489	1297 204 059		Kit	3./4.VİT.SENKROMENÇ KİT	SYNCH.KIT 3rd/4th
1	K20.00021	1304 304 686	(1295 304 004)	2	3./4.VİT.FRENLEME	SYNCH.CONE
2	K20.00025	1297 304 031		1	3./4.VİT.YILDIZ DİŞLİ	GUIDE SLEEVE
3	K20.00469	0732 040 385		3	3./4.VİT.YILDIZ DİŞLİ YAYI	SPRING
4	K20.00470	0732 040 386		3	3./4.VİT.YILDIZ DİŞLİ YAYI	SPRING
5	K20.00471	1240 304 278		3	3./4.VİT.YILDIZ DİŞLİ FİŞEĞİ	PRESSURE PIECE
6	K20.00020	1295 304 002		1	3./4.VİT.SENK.HALKA	ENGAGING SLEEVE

SYNCHRONIZER KIT 3rd/4th

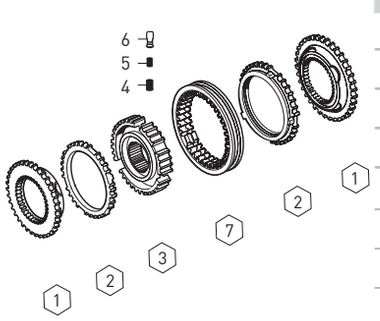

Fig.	Kacmaz No.	Oem No	Oem Old No	Pcs.	Ürün Tanımı	Description
	K20.00490	1297 298 958		Kit	3./4.VİT.SENKROMENÇ KİT	SYNCH.KIT 3rd/4th
1	K20.00019	1295 304 278		2	3./4.VİT.SENKROMENÇ	ENGAGING RING
2	K20.00021	1304 304 686	(1295 304 004)	2	3./4.VİT.FRENLEME	SYNCH.CONE
3	K20.00025	1297 304 031		1	3./4.VİT.YILDIZ DİŞLİ	GUIDE SLEEVE
4	K20.00469	0732 040 385		3	3./4.VİT.YILDIZ DİŞLİ YAYI	SPRING
5	K20.00470	0732 040 386		3	3./4.VİT.YILDIZ DİŞLİ YAYI	SPRING
6	K20.00471	1240 304 278		3	3./4.VİT.YILDIZ DİŞLİ FİŞEĞİ	PRESSURE PIECE
7	K20.00020	1295 304 002		1	3./4.VİT.SENK.HALKA	ENGAGING SLEEVE

Original parts names, oem numbers, symbols and descriptions used in this catalogue are for reference purposes only.

Fig.	Kacmaz No.	Oem No	Oem Old No	Pcs.	Ürün Tanımı	Description
	K20.00491	1297 204 072		Kit	1./2.VİT.SENKROMENÇ KİT	SYNCH.KIT 1st/2nd
1	K20.00032	1297 304 196		1	1./2.VİT.SENKROMENÇ	ENGAGING RING
2	K20.00346	1296 304 135	(1246 304 278)	1	1./2.VİT.SENK.FRENLEME	SYNCHRONIZING CONE

SYNCHRONIZER KIT 1st/2nd

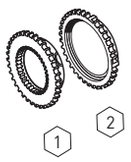

Fig.	Kacmaz No.	Oem No	Oem Old No	Pcs.	Ürün Tanımı	Description
	K20.00492	1297 204 031		Kit	1./2.VİT.HALKA YILDIZ KİTİ	SYNCH.KIT 1st/2nd
1	K20.00071	1297 304 195		1	1./2.VİT.YILDIZ DİŞLİ	GUIDE SLEEVE
2	K20.00469	0732 040 385		3	1./2.VİT.YILDIZ DİŞLİ YAYI	SPRING
3	K20.00470	0732 040 386		3	1./2.VİT.YILDIZ DİŞLİ YAYI	SPRING
4	K20.00471	1240 304 278		3	1./2.VİT.YILDIZ DİŞLİ FİŞEĞİ	PRESSURE PIECE
5	K20.00034	1257 304 020	(1250 304 160)	1	1./2.VİT.SENK.HALKA	ENGAGING SLEEVE

SYNCHRONIZER KIT 1st/2nd

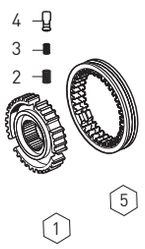

Fig.	Kacmaz No.	Oem No	Oem Old No	Pcs.	Ürün Tanımı	Description
	K20.00493	1297 204 019		Kit	1./2.VİT.SENKROMENÇ KİT	SYNCH.KIT 1st/2nd
1	K20.00346	1296 304 135	(1246 304 278)	2	1./2.VİT.FRENLEME	SYNCH.CONE
2	K20.00071	1297 304 195		1	1./2.VİT.YILDIZ DİŞLİ	GUIDE SLEEVE
3	K20.00469	0732 040 385		3	1./2.VİT.YILDIZ DİŞLİ YAYI	SPRING
4	K20.00470	0732 040 386		3	1./2.VİT.YILDIZ DİŞLİ YAYI	SPRING
5	K20.00471	1240 304 278		3	1./2.VİT.YILDIZ DİŞLİ FİŞEĞİ	PRESSURE PIECE
6	K20.00034	1257 304 020	(1250 304 160)	1	1./2.VİT.SENK.HALKA	ENGAGING SLEEVE

SYNCHRONIZER KIT 1st/2nd

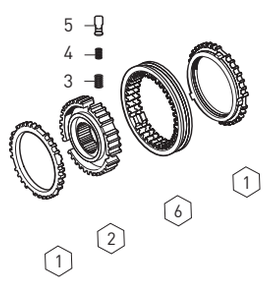

Fig.	Kacmaz No.	Oem No	Oem Old No	Pcs.	Ürün Tanımı	Description
	K20.00494	1297 298 956		Kit	1./2.VİT.SENKROMENÇ KİT	SYNCH.KIT 1st/2nd
1	K20.00032	1297 304 196		2	1./2.VİT.SENKROMENÇ	ENGAGING RING
2	K20.00346	1296 304 135	(1246 304 278)	2	1./2.VİT.FRENLEME	SYNCH.CONE
3	K20.00071	1297 304 195		1	1./2.VİT.YILDIZ DİŞLİ	GUIDE SLEEVE
4	K20.00469	0732 040 385		3	1./2.VİT.YILDIZ DİŞLİ YAYI	SPRING
5	K20.00470	0732 040 386		3	1./2.VİT.YILDIZ DİŞLİ YAYI	SPRING
6	K20.00471	1240 304 278		3	1./2.VİT.YILDIZ DİŞLİ FİŞEĞİ	PRESSURE PIECE
7	K20.00034	1257 304 020	(1250 304 160)	1	1./2.VİT.SENK.HALKA	ENGAGING SLEEVE

SYNCHRONIZER KIT 1st/2nd

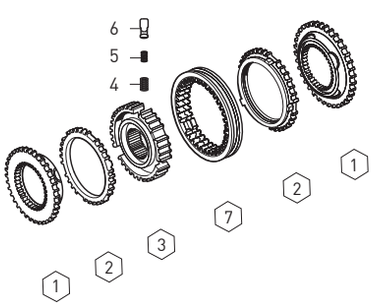

Fig.	Kacmaz No.	Oem No	Oem Old No	Pcs.	Ürün Tanımı	Description
	K20.00511	1297 298 912		Kit	AĞIR SERİ DİŞLİ TAKIMI	PLANETARY GEAR KIT
1	K20.00118	1297 232 023	(1297 332 022)	5	HEYKEL KOZA DİŞLİSİ	PLANETARY GEAR
2	K20.00418	1297 332 109	(1297 332 005)	5	HEYKEL KOZA DİŞLİ PİMİ	PLANETARY SHAFT
3	K20.01511	0501 306 212		10	HEYKEL KOZA DİŞLİ PULU	THRUST WASHER
4	K20.01512	0730 103 846		15	HEYKEL KOZA DİŞLİ PULU	THRUST WASHER
5	K20.01453	0750 119 109		120	HEYKEL KOZA DİŞ.BİLYASI	NEEDLE ROLLER (10X16.8)

PLANETARY GEAR KIT

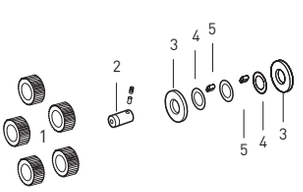

Original parts names, oem numbers, symbols and descriptions used in this catalogue are for reference purposes only.

PLANETARY GEAR KIT

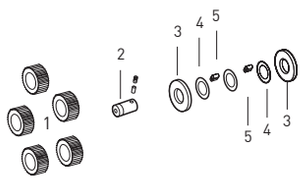

Fig.	Kacmaz No.	Oem No	Oem Old No	Pcs.	Ürün Tanımı	Description
	K20.00512	1297 298 919		Kit	AĞIR SERİ DİŞLİ TAKIMI	PLANETARY GEAR KIT
1	K20.00417	1297 232 024	(1297 332 028)	5	HEYKEL KOZA DİŞLİSİ	PLANETARY GEAR
2	K20.00418	1297 332 109	(1297 332 005)	5	HEYKEL KOZA DİŞLİ PİMİ	PLANETARY SHAFT
3	K20.01511	0501 306 212		10	HEYKEL KOZA DİŞLİ PULU	THRUST WASHER
4	K20.01512	0730 103 846		15	HEYKEL KOZA DİŞLİ PULU	THRUST WASHER
5	K20.01453	0750 119 109		120	HEYKEL KOZA DİŞ.BİLYASI	NEEDLE ROLLER (10X16.8)

SYNCHRONIZER KIT PLANETARY

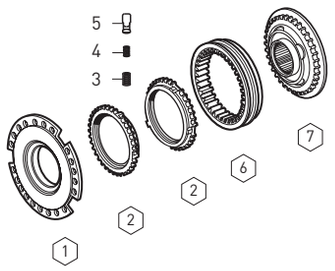

Fig.	Kacmaz No.	Oem No	Oem Old No	Pcs.	Ürün Tanımı	Description
	K20.00498	1295 298 939		Kit	AĞIR SERİ SENK.KİT	SYNCHRONIZER KIT
1	K20.00007	1296 233 006		1	TEPSİ SENKROMENÇ	FLANGE
2	K20.00038	1296 333 045	(1296 333 022)	2	AĞIR SERİ FRENLEME	SYNCHRONIZING CONE
3	K20.00469	0732 040 385		9	AĞIR SERİ YILDIZ DİŞLİ YAYI	SPRING
4	K20.00470	0732 040 386		9	AĞIR SERİ YILDIZ DİŞLİ YAYI	SPRING
5	K20.00471	1240 304 278		9	AĞIR SERİ YILDIZ DİŞ.FİŞEĞİ	PRESSURE PIECE
6	K20.00039	1296 333 023		1	AĞIR SERİ SENK.HALKA	ENGAGING SLEEVE
7	K20.00006	1313 233 001	(1297 233 018)	1	SERİ SENKROMENÇ	ENGAGING RING

SYNCHRONIZER KIT PLANETARY

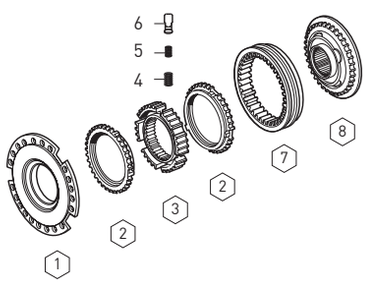

Fig.	Kacmaz No.	Oem No	Oem Old No	Pcs.	Ürün Tanımı	Description
	K20.00500	1295 298 950		Kit	AĞIR SERİ SENK.KİT	SYNCHRONIZER KIT
1	K20.00007	1296 233 006		1	TEPSİ SENKROMENÇ	FLANGE
2	K20.00038	1296 333 045	(1296 333 022)	2	AĞIR SERİ FRENLEME	SYNCHRONIZING CONE
3	K20.00363	1296 333 002		1	AĞIR SERİ YILDIZ DİŞLİ	GUIDE SLEEVE
4	K20.00469	0732 040 385		9	AĞIR SERİ YILDIZ DİŞLİ YAYI	SPRING
5	K20.00470	0732 040 386		9	AĞIR SERİ YILDIZ DİŞLİ YAYI	SPRING
6	K20.00471	1240 304 278		9	AĞIR SERİ YILDIZ DİŞ.FİŞEĞİ	PRESSURE PIECE
7	K20.00039	1296 333 023		1	AĞIR SERİ SENK.HALKA	ENGAGING SLEEVE
8	K20.00006	1313 233 001	(1297 233 018)	1	SERİ SENKROMENÇ	ENGAGING RING

GEARBOX GASKET KIT

Fig.	Kacmaz No.	Oem No	Oem Old No	Pcs.	Ürün Tanımı	Description
1	K20.01584	1295 298 915		Kit	ŞANZIMAN CONTA TAKIMI	GASKET KIT
2		1313 301 038		1	ŞANZ.ÖN GÖVDE CONTASI	GASKET
3		1313 302 014		1	PRİZ.KEÇE KAPAK CONTASI	GASKET
4		1313 306 012		1	ŞANZ.HİLALİ KAPAK CONTASI	GASKET
5		1313 307 002		1	ŞANZ.ÖN GÖVDE ARKA CONTA	GASKET
5		1313 307 020		2	ŞANZ.KULE KAPAK CONTASI	GASKET
5		1313 307 003		1	ŞANZ.KULE KAPAK CONTASI	GASKET
5		1313 307 004		1	ŞANZ.KULE ALT KAPAK CONTASI	GASKET
5		1313 307 022		1	ŞANZ.KULE ÜST KAPAK CONTASI	GASKET
6		1313 301 037		1	ŞANZ.ARKA GÖVDE CONTASI	GASKET
7		1313 301 036		1	ŞANZ.BİLYA KAPAK CONTASI	GASKET
8	K20.02108	1238 308 201		1	PTO BAĞLANTI KAPAK CONTASI	GASKET
9		1313 307 005		1	ŞANZ.İSTİNAT KAPAK CONTASI	GASKET
10		1313 307 006		1	ŞANZ.İSTİNAT KAPAK CONTASI	GASKET

Original parts names, oem numbers, symbols and descriptions used in this catalogue are for reference purposes only.

Fig.	Kacmaz No.	Oem No	Oem Old No	Pcs.	Ürün Tanımı	Description
1		1296 313 131		1	P.KİLİT EMNİYET SACI	RETAINING RING
2		0730 104 627		1	PARÇALI KİLİT	SPLIT RING
3		1296 313 238		1	PTO MİL KOVANI	SLIDING SLEEVE
4		0730 104 628		1	PTO DİŞLİ AYAR PULU	THRUST WASHER
5		1296 313 082		1	PTO DİŞLİ	GEAR 33 T
5		1296 313 083		1	PTO DİŞLİ	GEAR 36 T
5		1296 313 084		1	PTO DİŞLİ	GEAR 38 T
5		1296 313 085		1	PTO DİŞLİ	GEAR 39 T
5		1296 313 086		1	PTO DİŞLİ	GEAR 46 T
6	K20.00556	1296 213 028		1	PTO MİLİ DÜZ	INTERM.SHAFT
7	K20.00555	1296 213 028		1	PTO MİLİ FREZELİ	INTERM.SHAFT (Milled)
8		1296 313 125		1	PTO MİL SOMUNU	NUT
9		0735 410 139		1	PTO MİL BİLYASI	ROLLER BEARING
10		7429 032 102		1	PTO BİLYA KAPAK PULU	THRUST WASHER
11		1232 304 062		1	PTO BİLYA KAPAK RAYNELİ	SHIM (1.00mm)
11		1232 304 063		1	PTO BİLYA KAPAK RAYNELİ	SHIM (0.90mm)
11		1232 304 072		1	PTO BİLYA KAPAK RAYNELİ	SHIM (0.70mm)
12		1250 313 190		1	PTO BAĞLANTI KAPAĞI	COVER
13	K20.01013	0750 111 341		1	ŞANZ.ARKA KAPAK KEÇESİ	OIL SEAL

P.T.O. (POWER TAKE OFF)

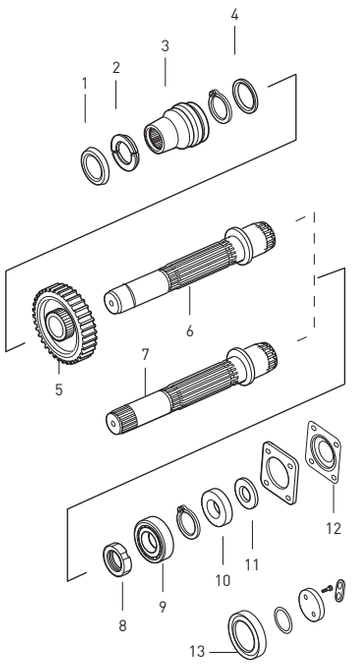

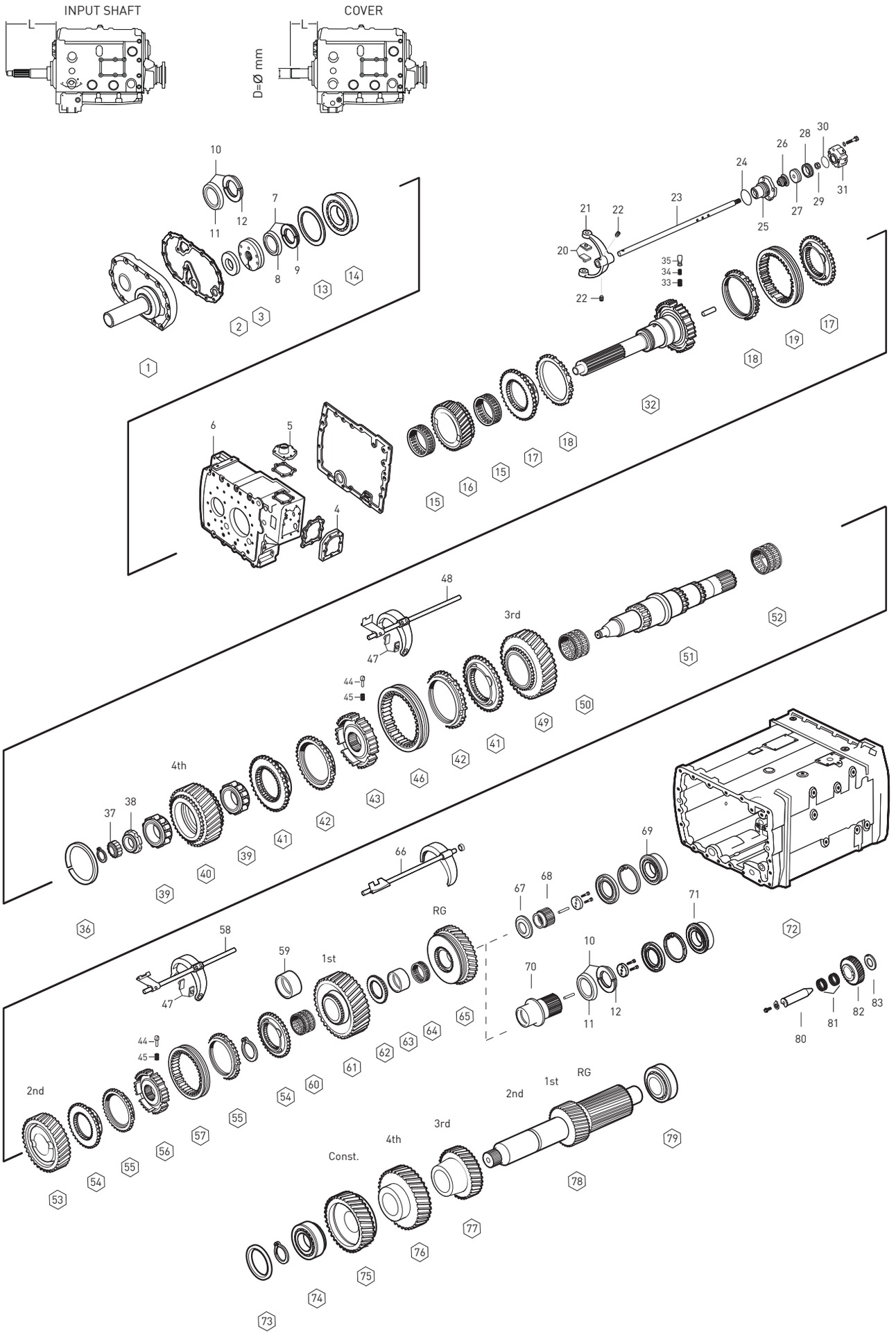

Original parts names, oem numbers, symbols and descriptions used in this catalogue are for reference purposes only.

Fig.	Kacmaz No.	Oem No	Oem Old No	Pcs.	Ürün Tanımı	Description	Sizes	Notes	SG 11.46-0.85	DG 13.68-1.00	SG 14.29-0.82	DG 17.06-1.00
1	K20.00610	1297 302 011		1	PRİZDİREK KEÇE KAPAĞI	COVER	L=170 D=57	A	◆	◆	◆	◆
2	K20.01002	0750 111 002		1	PRİZDİREK KEÇESİ	OIL SEAL	48X75X8mm	A	◆	◆	◆	◆
2	K20.01004	0634 310 733		1	PRİZDİREK KEÇESİ	OIL SEAL	90X110X13mm	B	◆		◆	
3	K20.00484	1295 202 041		1	YAĞ POMPASI	OIL PUMP			◆	◆	◆	◆
4	K20.00561	1295 307 479		1	ŞANZIMAN KULE KAPAĞI	COVER			◆	◆	◆	◆
5	K20.00597	1295 307 434		1	ŞANZIMAN KULE KAPAĞI	COVER			◆	◆	◆	◆
6		1296 301 227	(1296 301 228)	1	ŞANZIMAN ÖN GÖVDE	HOUSING		B		◆	◆	
6		1296 301 150	(1296 301 195)	1	ŞANZIMAN ÖN GÖVDE	HOUSING		A	◆			◆
6		1296 301 205		1	ŞANZIMAN ÖN GÖVDE	HOUSING		A		◆	◆	
7	K20.01541	1499 298 003		1	EMN.SACI VE P.KİLİT TAK.	SPLIT RING KIT	4.00mm	(1)	◆	◆	◆	◆
7	K20.01543	1499 298 002		1	EMN.SACI VE P.KİLİT TAK.	SPLIT RING KIT	3.90mm	(2)	◆	◆	◆	◆
7	K20.01545	1499 298 001		1	EMN.SACI VE P.KİLİT TAK.	SPLIT RING KIT	3.80mm	(3)	◆	◆	◆	◆
8	K20.01547	0730 062 579		1	KİLİT SEGMAN EMN.SACI	RETAINING RING			◆	◆	◆	◆
9	K20.01542	0730 105 156		2	PARÇALI KİLİT	SPLIT RING	4.00mm		◆	◆	◆	◆
9	K20.01544	0730 105 155		2	PARÇALI KİLİT	SPLIT RING	3.90mm		◆	◆	◆	◆
9	K20.01546	0730 105 154		2	PARÇALI KİLİT	SPLIT RING	3.80mm		◆	◆	◆	◆
10	K20.01638	1499 298 090		1	EMN.SACI VE P.KİLİT TAK.	SPLIT RING KIT	4.30mm	(4)	◆	◆	◆	◆
10	K20.01640	1499 298 114		1	EMN.SACI VE P.KİLİT TAK.	SPLIT RING KIT	4.20mm	(5)	◆	◆	◆	◆
10	K20.01642	1499 298 100		1	EMN.SACI VE P.KİLİT TAK.	SPLIT RING KIT	4.10mm	(6)	◆	◆	◆	◆
10	K20.01548	1499 298 098		2	EMN.SACI VE P.KİLİT TAK.	SPLIT RING KIT	4.00mm	(7)	◆	◆	◆	◆
10	K20.01550	1499 298 096		2	EMN.SACI VE P.KİLİT TAK.	SPLIT RING KIT	3.90mm	(8)	◆	◆	◆	◆
10	K20.01552	1499 298 094		2	EMN.SACI VE P.KİLİT TAK.	SPLIT RING KIT	3.80mm	(9)	◆	◆	◆	◆
11	K20.01554	0730 061 816		2	PARÇALI KİLİT EMN.SACI	RETAINING RING			◆	◆	◆	◆
12	K20.01639	0730 103 244		2	PARÇALI KİLİT	SPLIT RING	4.30mm		◆	◆	◆	◆
12	K20.01641	0730 104 337		2	PARÇALI KİLİT	SPLIT RING	4.20mm		◆	◆	◆	◆
12	K20.01643	0730 103 941		2	PARÇALI KİLİT	SPLIT RING	4.10mm		◆	◆	◆	◆
12	K20.01549	0730 103 939		4	PARÇALI KİLİT	SPLIT RING	4.00mm		◆	◆	◆	◆
12	K20.01551	0730 103 937		4	PARÇALI KİLİT	SPLIT RING	3.90mm		◆	◆	◆	◆
12	K20.01553	0730 103 935		4	PARÇALI KİLİT	SPLIT RING	3.80mm		◆	◆	◆	◆
13	K20.01644	0730 102 504		1	PRİZ.ÖN BİLYA RAYNELİ	SHIM	0.60mm		◆	◆	◆	◆
13	K20.01645	2001645		1	PRİZ.ÖN BİLYA RAYNELİ	SHIM	0.30mm		◆	◆	◆	◆
13	K20.01646	2001646		1	PRİZ.ÖN BİLYA RAYNELİ	SHIM	0.20mm		◆	◆	◆	◆
13	K20.01647	2001647		1	PRİZ.ÖN BİLYA RAYNELİ	SHIM	0.10mm		◆	◆	◆	◆
14	K20.01102	0750 118 130	(0750 118 131)	1	PRİZDİREK ÖN BİLYA	ROLLER BEARING	80X150X27.5mm		◆	◆	◆	◆
15	K20.01317	0735 320 896		2	PRİZDİREK MASURA BİLYA	NEEDLE CAGE	88X96X29mm		◆	◆	◆	◆
16	K20.00048	1297 302 177	(1297 302 070)	1	TAKVİYE DİŞLİSİ 30 DİŞ	CONSTANT GEAR 30 T		AB	◆			
16	K20.00049	1297 302 176	(1297 302 071)	1	TAKVİYE DİŞLİSİ 28 DİŞ	CONSTANT GEAR 28 T		A		◆		
16	K20.00050	1297 302 250	(1297 302 111)	1	TAKVİYE DİŞLİSİ 29 DİŞ	CONSTANT GEAR 29 T		AB			◆	
16	K20.00051	1297 302 241	(1297 302 079)	1	TAKVİYE DİŞLİSİ 26 DİŞ	CONSTANT GEAR 26 T		A				◆
17a	K20.00019	1295 304 278		4	3./ 4.VİT.TAK.SENKROMENÇ	ENGAGING RING			◆	◆	◆	◆
17b	K20.00304	1297 304 041		4	3./ 4.VİT.TAK.SENKROMENÇ	ENGAGING RING			◆	◆	◆	◆

NOTES :

AB alfabetic letters are used in conjunction with the encoded parts.

(1) This kit includes (1499 298 003) = 2pcs 0730 105 156 + 1pcs 0730 062 579
(2) This kit includes (1499 298 002) = 2pcs 0730 105 155 + 1pcs 0730 062 579
(3) This kit includes (1499 298 001) = 2pcs 0730 105 154 + 1pcs 0730 062 579
(4) This kit includes (1499 298 090) = 2pcs 0730 103 244 + 1pcs 0730 061 816
(5) This kit includes (1499 298 114) = 2pcs 0730 104 337 + 1pcs 0730 061 816
(6) This kit includes (1499 298 100) = 2pcs 0730 103 941 + 1pcs 0730 061 816
(7) This kit includes (1499 298 098) = 2pcs 0730 103 939 + 1pcs 0730 061 816
(8) This kit includes (1499 298 096) = 2pcs 0730 103 937 + 1pcs 0730 061 816
(9) This kit includes (1499 298 094) = 2pcs 0730 103 935 + 1pcs 0730 061 816

NOTLAR :

AB alfabetik harfler ile kodlanan parçalar birlikte kullanılır.

(1) (1499 298 003) nolu kit bu parçalardan oluşur = 2pcs 0730 105 156 + 1pcs 0730 062 579
(2) (1499 298 002) nolu kit bu parçalardan oluşur = 2pcs 0730 105 155 + 1pcs 0730 062 579
(3) (1499 298 001) nolu kit bu parçalardan oluşur = 2pcs 0730 105 154 + 1pcs 0730 062 579
(4) (1499 298 090) nolu kit bu parçalardan oluşur = 2pcs 0730 103 244 + 1pcs 0730 061 816
(5) (1499 298 114) nolu kit bu parçalardan oluşur = 2pcs 0730 104 337 + 1pcs 0730 061 816
(6) (1499 298 100) nolu kit bu parçalardan oluşur = 2pcs 0730 103 941 + 1pcs 0730 061 816
(7) (1499 298 098) nolu kit bu parçalardan oluşur = 2pcs 0730 103 939 + 1pcs 0730 061 816
(8) (1499 298 096) nolu kit bu parçalardan oluşur = 2pcs 0730 103 937 + 1pcs 0730 061 816
(9) (1499 298 094) nolu kit bu parçalardan oluşur = 2pcs 0730 103 935 + 1pcs 0730 061 816

Original parts names, oem numbers, symbols and descriptions used in this catalogue are for reference purposes only.

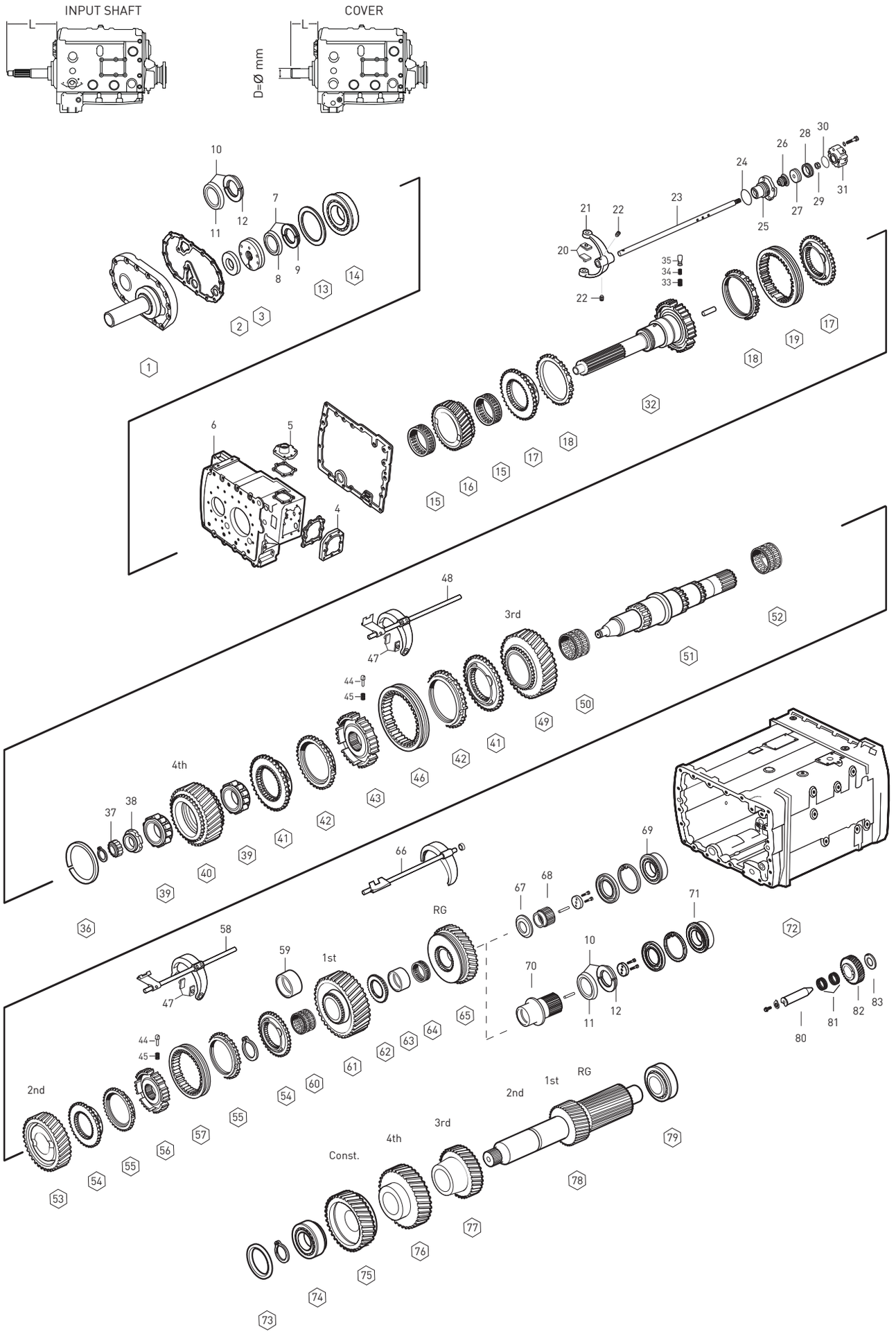

Original parts names, oem numbers, symbols and descriptions used in this catalogue are for reference purposes only.

Fig.	Kacmaz No.	Oem No	Oem Old No	Pcs.	Ürün Tanımı	Description	Sizes	Notes	SG 11.46-0.85	DG 13.68-1.00	SG 14.29-0.82	DG 17.06-1.00
18	K20.00021	1304 304 686	(1295 304 004)	4	3./ 4.VİT.TAK.FRENLEME	SYNCHRONIZING CONE			◆	◆	◆	◆
19	K20.00020	1295 304 002		2	3./ 4.VİT.TAK.SENK.HALKA	ENGAGING SLEEVE			◆	◆	◆	◆
20	K20.00186	1295 306 132		2	TAKVİYE HİLAL PABUCU	SLIDING PAD			◆	◆	◆	◆
21		1313 312 002		1	TAKVİYE HİLALİ	G.SHIFT FORK			◆	◆	◆	◆
22	K20.01688	1315 312 047		2	TAKVİYE HİLAL VİDASI	SCREW	M12X1.0mm		◆	◆	◆	◆
23		1297 312 008		1	TAKVİYE HİLAL MİLİ	G.SHIFT RAIL			◆	◆	◆	◆
24		0634 313 671		1	TAKVİYE SİLİNDİR ORİNGİ	O-RING	80.0X3.0mm		◆	◆	◆	◆
25	K20.01738	1296 312 042	(1296 312 016)	1	TAKVİYE SİLİNDİR GÖVDESİ	CYLINDER			◆	◆	◆	◆
26	K20.01016	0750 112 034		1	TAKVİYE HİLAL MİL KEÇESİ	FLANGE PACKING	25.0X38.0X14.2mm		◆	◆	◆	◆
27		1296 312 053	(1296 312 047)	1	TAKVİYE HİLAL MİL PİSTONU	PISTON			◆	◆	◆	◆
28	K20.01021	0750 112 089		1	TAKVİYE HAVA KEÇESİ	DOUBLE PACKING	53.0X63.0X16.2mm		◆	◆	◆	◆
29	K20.01774	0737 006 095		1	TAKVİYE HİLAL MİL SOMUNU	NUT	M16X1.5mm		◆	◆	◆	◆
30		0634 314 018		1	TAKVİYE SİLİNDİR ORİNGİ	O-RING	59.0X2.0mm		◆	◆	◆	◆
31		0750 132 032		1	TAKVİYE VENTİLİ	5/2 WAY VALVE			◆	◆	◆	◆
32	K20.00513	1297 202 052		1	PRİZDİREK	INPUT SHAFT	L=260 SAE 1 3/4	A	◆	◆	◆	◆
32	K20.00046	1297 221 008		1	PRİZDİREK	INPUT SHAFT	L=367.6 SAE 1 3/4	B	◆		◆	
33	K20.00469	0732 040 385		9	PRİZ.ve YILDIZ DİŞLİ YAYI	SPRING			◆	◆	◆	◆
34	K20.00470	0732 040 386		9	PRİZ.ve YILDIZ DİŞLİ YAYI	SPRING			◆	◆	◆	◆
35	K20.00471	1240 304 278		9	PRİZ.ve YILDIZ DİŞLİ FİŞEĞİ	PRESSURE PIECE			◆	◆	◆	◆
36	K20.01518	0730 003 518		1	SENKROMENÇ AYAR SEKMANI	RING	6.30mm		◆	◆	◆	◆
36	K20.01519	0730 003 517		1	SENKROMENÇ AYAR SEKMANI	RING	6.00mm		◆	◆	◆	◆
36	K20.01520	0730 003 161		1	SENKROMENÇ AYAR SEKMANI	RING	5.10mm		◆	◆	◆	◆
36	K20.01521	0730 003 159		1	SENKROMENÇ AYAR SEKMANI	RING	4.50mm		◆	◆	◆	◆
36	K20.01522	0730 004 237		1	SENKROMENÇ AYAR SEKMANI	RING	4.00mm		◆	◆	◆	◆
37	K20.01108	0750 118 038		1	KAMALI MİL UÇ BİLYA	ROLLER BEARING	35X68X27.5mm		◆	◆	◆	◆
38	K20.00485	0737 502 092		1	KAMALI MİL SOMUNU	NUT	M60X1.5mm		◆	◆	◆	◆
39	K20.01111	0750 118 220	(0735 455 248)	2	4.VİTES DİŞLİ BİLYASI	ROLLER BEARING	63X97.5X37.5mm		◆	◆	◆	◆
40	K20.00063	1297 304 267	(1297 304 025)	1	4.VİTES DİŞLİSİ 28 DİŞ	GEAR 4th 28 T		AB	◆			
40	K20.00064	1297 304 260	(1297 304 026)	1	4.VİTES DİŞLİSİ 30 DİŞ	GEAR 4th 30 T		A		◆		
40	K20.00065	1297 304 318	(1297 304 175)	1	4.VİTES DİŞLİSİ 26 DİŞ	GEAR 4th 26 T		AB			◆	
40	K20.00066	1297 304 413	(1297 304 285)	1	4.VİTES DİŞLİSİ 29 DİŞ	GEAR 4th 29 T		A				◆
41	K20.00078	1297 304 369		2	3./ 4. VİTES SENKROMENÇ	ENGAGING RING			◆	◆	◆	◆
42	K20.00108	1297 304 484	(1297 304 402)	2	3./ 4. VİT.SENK.FRENLEME	SYNCHRONIZING CONE			◆	◆	◆	◆
43	K20.00081	1297 304 446		1	3./ 4. VİT.YILDIZ DİŞLİ	GUIDE SLEEVE			◆	◆	◆	◆
44	K20.00111	1297 304 436		6	1./2.-3./4.VİT.YILDIZ FİŞEĞİ	PRESSURE PIECE			◆	◆	◆	◆
45	K20.00110	0732 040 409		6	1./2.-3./4.VİT.YILDIZ YAYI	SPRING			◆	◆	◆	◆
46	K20.00098	1310 304 202	(1312 302 057)	1	3./ 4. VİT.SENK. HALKA	ENGAGING SLEEVE			◆	◆	◆	◆
			(1310 304 174)									
47	K20.00204	1297 306 120		4	HİLAL PABUCU	SLIDING PAD			◆	◆	◆	◆
48		1297 206 103	(1297 206 049)	1	3./4.VİTES HİLALİ	GEAR SHIT FORK 3rd/4th			◆	◆	◆	◆
49	K20.00067	1297 304 266	(1297 304 019)	1	3.VİTES DİŞLİSİ 32 DİŞ	GEAR 3rd 32 T		AB	◆		◆	

NOTES :

AB alfabetic letters are used in conjunction with the encoded parts.

NOTLAR :

AB alfabetik harfler ile kodlanan parçalar birlikte kullanılır.

Original parts names, oem numbers, symbols and descriptions used in this catalogue are for reference purposes only.

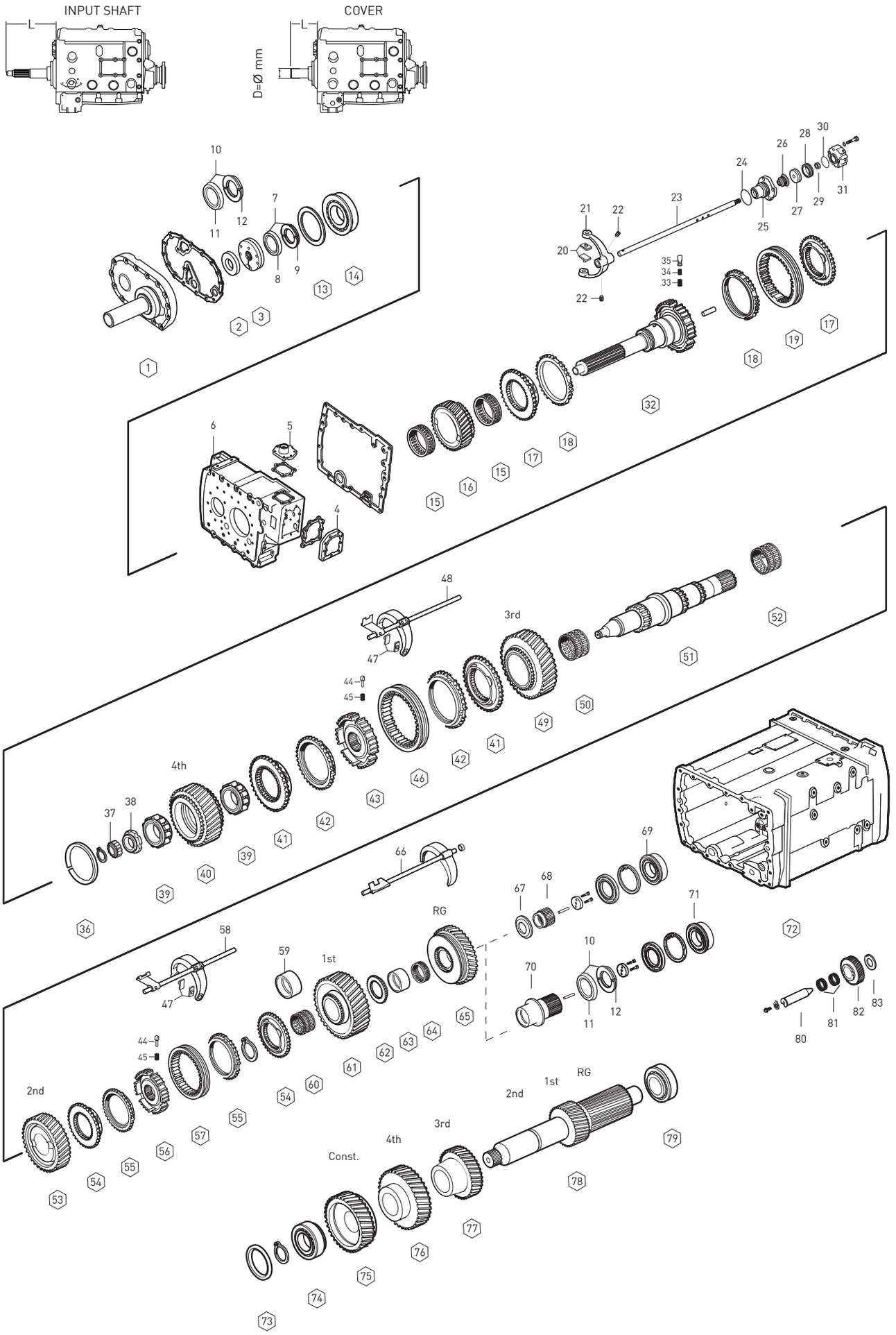

Original parts names, oem numbers, symbols and descriptions used in this catalogue are for reference purposes only.

Fig.	Kacmaz No.	Oem No	Oem Old No	Pcs.	Ürün Tanımı	Description	Sizes	Notes	SG 11.46-0.85	DG 13.68-1.00	SG 14.29-0.82	DG 17.06-1.00
49	K20.00068	1297 304 261	(1297 304 020)	1	3.VİTES DİŞLİSİ 34 DİŞ	GEAR 3rd 34 T		A		◆		
49	K20.00077	1297 304 414	(1297 304 122)	1	3.VİTES DİŞLİSİ 34 DİŞ	GEAR 3rd 34 T		A				◆
50	K20.01313	0735 320 451		1	3.VİT.DİŞLİ MASURA BİLYA	NEEDLE CAGE	82X90X60mm		◆	◆	◆	◆
51	K20.00407	1297 304 181		1	KAMALI MİL	MAIN SHAFT		AB	◆	◆		
51	K20.00408	1297 304 193		1	KAMALI MİL	MAIN SHAFT		AB			◆	◆
52	K20.01318	0735 320 452		1	2.VİT. DİŞLİ MASURA BİLYA	NEEDLE CAGE	82X90X55mm		◆	◆	◆	◆
53	K20.00069	1297 304 269	(1297 304 016)	1	2.VİTES DİŞLİSİ 37 DİŞ	GEAR 2nd 37 T		AB	◆		◆	
53	K20.00070	1297 304 442	(1297 304 017)	1	2.VİTES DİŞLİSİ 38 DİŞ	GEAR 2nd 38 T		A		◆		◆
54	K20.00079	1297 304 371		2	1./ 2.VİTES SENKROMENÇ	ENGAGING RING			◆	◆	◆	◆
55	K20.00112	1297 304 485	(1297 304 401)	2	1./ 2.VİT.SENK.FRENLEME	SYNCHRONIZING CONE			◆	◆	◆	◆
56	K20.00428	1297 304 445		1	1./ 2.VİT.YILDIZ DİŞLİ	GUIDE SLEEVE			◆	◆	◆	◆
57	K20.00082	1297 304 450	(1297 304 415)	1	1./ 2.VİT.SENK.HALKA	ENGAGING SLEEVE			◆	◆	◆	◆
58		1297 206 106	(1297 206 058)	1	1./2.VİTES HİLALİ	GEAR SHIT FORK 1st/2nd			◆	◆	◆	◆
59	K20.00409	1297 304 035		1	1.VİTES MAS.BİL.ÇANAĞI	BEARING RACE			◆	◆	◆	◆
60	K20.01319	0735 320 487		1	1.VİTES MASURA BİLYA	NEEDLE CAGE	82X90X68mm		◆	◆	◆	◆
61	K20.00410	1297 304 270	(1297 304 153)	1	1.VİTES DİŞİLİSİ 44 DİŞ	GEAR 1st 44 T		AB	◆		◆	
61	K20.00411	1297 304 441	(1297 304 152)	1	1.VİTES DİŞİLİSİ 47 DİŞ	GEAR 1st 47 T		A		◆		◆
62	K20.00412	1297 304 154		1	GERİ VİTES YILDIZ DİŞLİ	GUIDE SLEEVE			◆	◆	◆	◆
63	K20.00413	1297 304 034		1	GERİ VİT.MAS.BİL.ÇANAĞI	BEARING RACE			◆	◆		
64	K20.01320	0735 320 486		1	GERİ VİTES MASURA BİLYA	NEEDLE CAGE	78X86X44mm		◆	◆	◆	◆
65	K20.00414	1297 304 149		1	GERİ VİTES DİŞLİSİ 39 DİŞ	REVERSE GEAR 39 T		AB	◆		◆	
65	K20.00415	1297 304 148		1	GERİ VİTES DİŞLİSİ 38 DİŞ	REVERSE GEAR 38 T		A		◆		◆
66		1297 206 174	(1297 206 162)	1	GERİ VİTES HİLALİ	GEAR SHIT FORK/RG			◆	◆	◆	◆
67	K20.01526	1297 304 381	(1297 304 176)	1	GERİ VİTES DİŞLİ PULU	THRUST WASHER			◆	◆		
68	K20.00072	1297 304 187		1	GÜNEŞ DİŞLİ 27 DİŞ	SUN GEAR 27 T			◆	◆		
69	K20.01116	0750 118 135	(0750 118 006)	1	GÜNEŞ DİŞLİ BİLYASI	ROLLER BEARING	65X140X33mm		◆	◆		
70	K20.00073	1297 304 439	(1297 304 192)	1	GÜNEŞ DİŞLİ 24 DİŞ	SUN GEAR 24 T					◆	◆
71	K20.01117	0750 118 180		1	GÜNEŞ DİŞLİ BİLYASI	ROLLER BEARING	80X140X33mm				◆	◆
72		1297 301 146	(1297 301 105)	1	ŞANZIMAN ORTA GÖVDE	HOUSING			◆	◆	◆	◆
			(1297 301 148)									
			(1297 301 106)									
73	K20.01648	0730 102 099		1	GRUP MİLİ ÖN BİLYA RAYNELİ	SHIM	3.00mm		◆	◆	◆	◆
73	K20.01649	0730 102 060		1	GRUP MİLİ ÖN BİLYA RAYNELİ	SHIM	2.60mm		◆	◆	◆	◆
73	K20.01650	0730 102 068		1	GRUP MİLİ ÖN BİLYA RAYNELİ	SHIM	2.20mm		◆	◆	◆	◆
73	K20.01651	0730 102 075		1	GRUP MİLİ ÖN BİLYA RAYNELİ	SHIM	1.85mm		◆	◆	◆	◆
73	K20.01652	2001652		1	GRUP MİLİ ÖN BİLYA RAYNELİ	SHIM	0.30mm		◆	◆	◆	◆
73	K20.01653	2001653		1	GRUP MİLİ ÖN BİLYA RAYNELİ	SHIM	0.20mm		◆	◆	◆	◆
73	K20.01654	2001654		1	GRUP MİLİ ÖN BİLYA RAYNELİ	SHIM	0.10mm		◆	◆	◆	◆
74	K20.01124	0750 117 010	(0750 117 030)	1	GRUP MİLİ ÖN BİLYA	ROLLER BEARING	50.8X100X35mm		◆	◆	◆	◆
75	K20.00052	1297 303 074	(1297 303 040)	1	OVARD.DİŞLİ KARŞ.31 DİŞ	CONSTANT GEAR 31 T		AB	◆			
75	K20.00053	1297 303 066	(1297 303 039)	1	OVARD.DİŞLİ KARŞ.34 DİŞ	CONSTANT GEAR 34 T		A		◆		

NOTES :

AB alfabetic letters are used in conjunction with the encoded parts.

NOTLAR :

AB alfabetik harfler ile kodlanan parçalar birlikte kullanılır.

Original parts names, oem numbers, symbols and descriptions used in this catalogue are for reference purposes only.

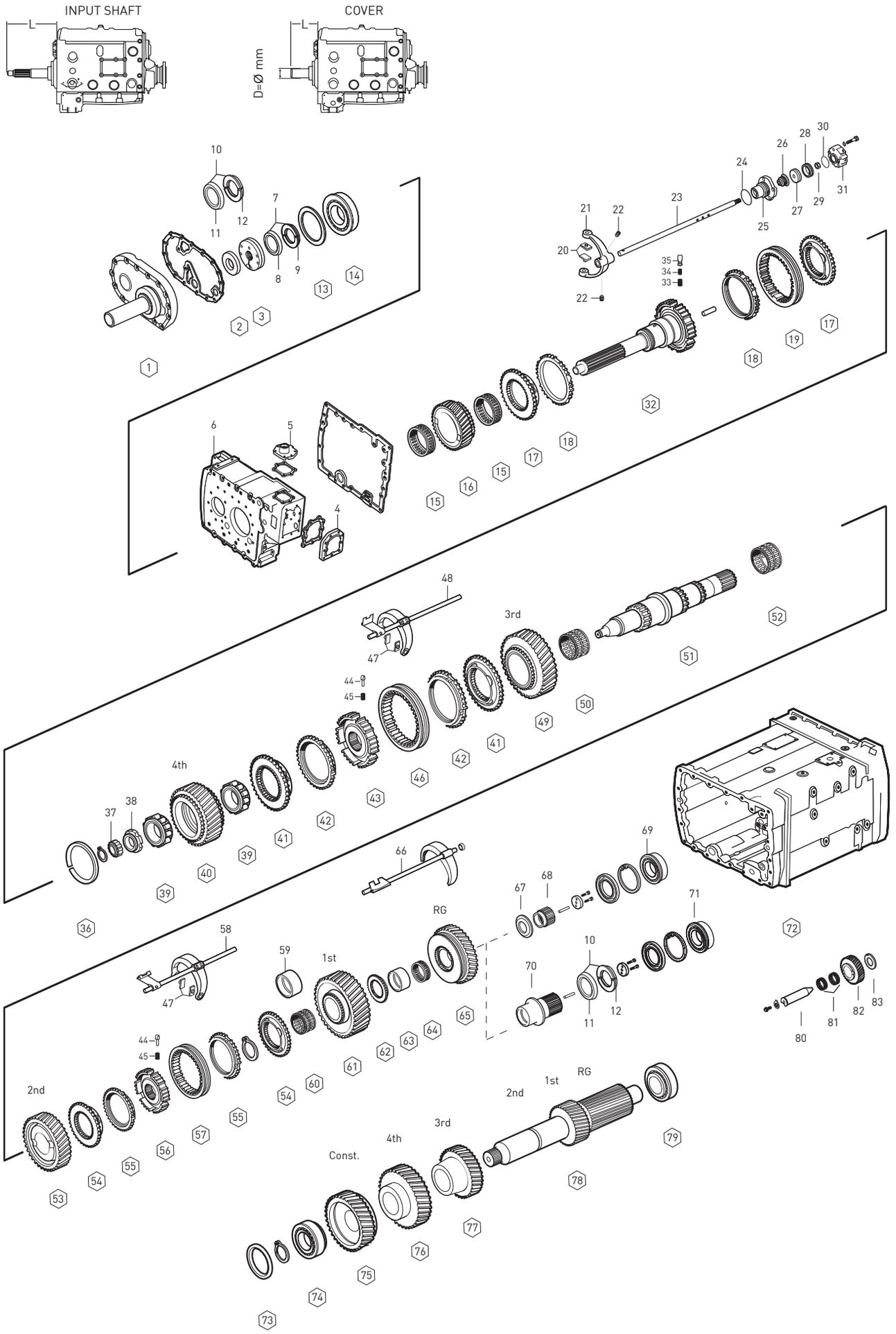

Original parts names, oem numbers, symbols and descriptions used in this catalogue are for reference purposes only.

Fig.	Kacmaz No.	Oem No	Oem Old No	Pcs.	Ürün Tanımı	Description	Sizes	Notes	SG 11.46-0.85	DG 13.68-1.00	SG 14.29-0.82	DG 17.06-1.00
75	K20.00054	1297 303 098	(1297 303 051)	1	OVARD.DİŞLİ KARŞ.32 DİŞ	CONSTANT GEAR 32 T		AB			◆	
75	K20.00055	1297 303 086	(1297 303 043)	1	OVARD.DİŞLİ KARŞ.35 DİŞ	CONSTANT GEAR 35 T		A				◆
76	K20.00059	1297 303 072	(1297 303 025)	1	4.VİTES DİŞLİ KARŞ.34 DİŞ	GEAR 4th 34 T		AB	◆			
76	K20.00062	1297 303 065	(1297 303 026)	1	4.VİTES DİŞLİ KARŞ.31 DİŞ	GEAR 4th 31 T		A		◆		
76	K20.00060	1297 303 097	(1297 303 050)	1	4.VİTES DİŞLİ KARŞ.35 DİŞ	GEAR 4th 35 T		AB			◆	
76	K20.00061	1297 303 123	(1297 303 041)	1	4.VİTES DİŞLİ KARŞ.32 DİŞ	GEAR 4th 32 T		A				◆
77	K20.00056	1297 303 073	(1297 303 010)	1	3.VİTES DİŞLİ KARŞ.28 DİŞ	GEAR 3rd 28 T		AB	◆		◆	
77	K20.00057	1297 303 067	(1297 303 009)	1	3.VİTES DİŞLİ KARŞ.25 DİŞ	GEAR 3rd 25 T		A		◆		
77	K20.00058	1297 303 132	(1297 303 042)	1	3.VİTES DİŞLİ KARŞ.26 DİŞ	GEAR 3rd 26 T		A				◆
78	K20.00416	1297 303 075	(1297 303 054)	1	GRUP MİLİ 19-23 DİŞ	COUNTER SHAFT 19-23 T		AB	◆		◆	
78	K20.00076	1297 303 140	(1297 303 064)	1	GRUP MİLİ 17-20 DİŞ	COUNTER SHAFT 17-20 T		A		◆		◆
79	K20.01126	0750 117 009		1	GRUP MİLİ ARKA BİLYA	ROLLER BEARING	49.2X103.1X43.6mm		◆	◆	◆	◆
80	K20.00598	1295 305 056	(1295 305 008)	1	KÜÇÜK GERİ VİTES PİMİ	PIN			◆	◆	◆	◆
			(1295 305 057)									
81	K20.01335	0750 115 011	(0735 320 042)	2	KÜÇÜK GERİ VİT.MAS.BİLYA	NEEDLE CAGE	40.0X60.0X26.0mm		◆	◆	◆	◆
82	K20.00600	1295 305 052		1	KÜÇÜK GERİ VİTES	REV.IDLER GEAR				◆		◆
82	K20.00601	1295 305 051		1	KÜÇÜK GERİ VİTES	REV.IDLER GEAR			◆		◆	
83	K20.01655	0730 150 064		1	KÜÇÜK GERİ VİTES PULU	THRUST WASHER			◆	◆	◆	◆

NOTES :

AB alfabetic letters are used in conjunction with the encoded parts.

NOTLAR :

AB alfabetik harfler ile kodlanan parçalar birlikte kullanılır.

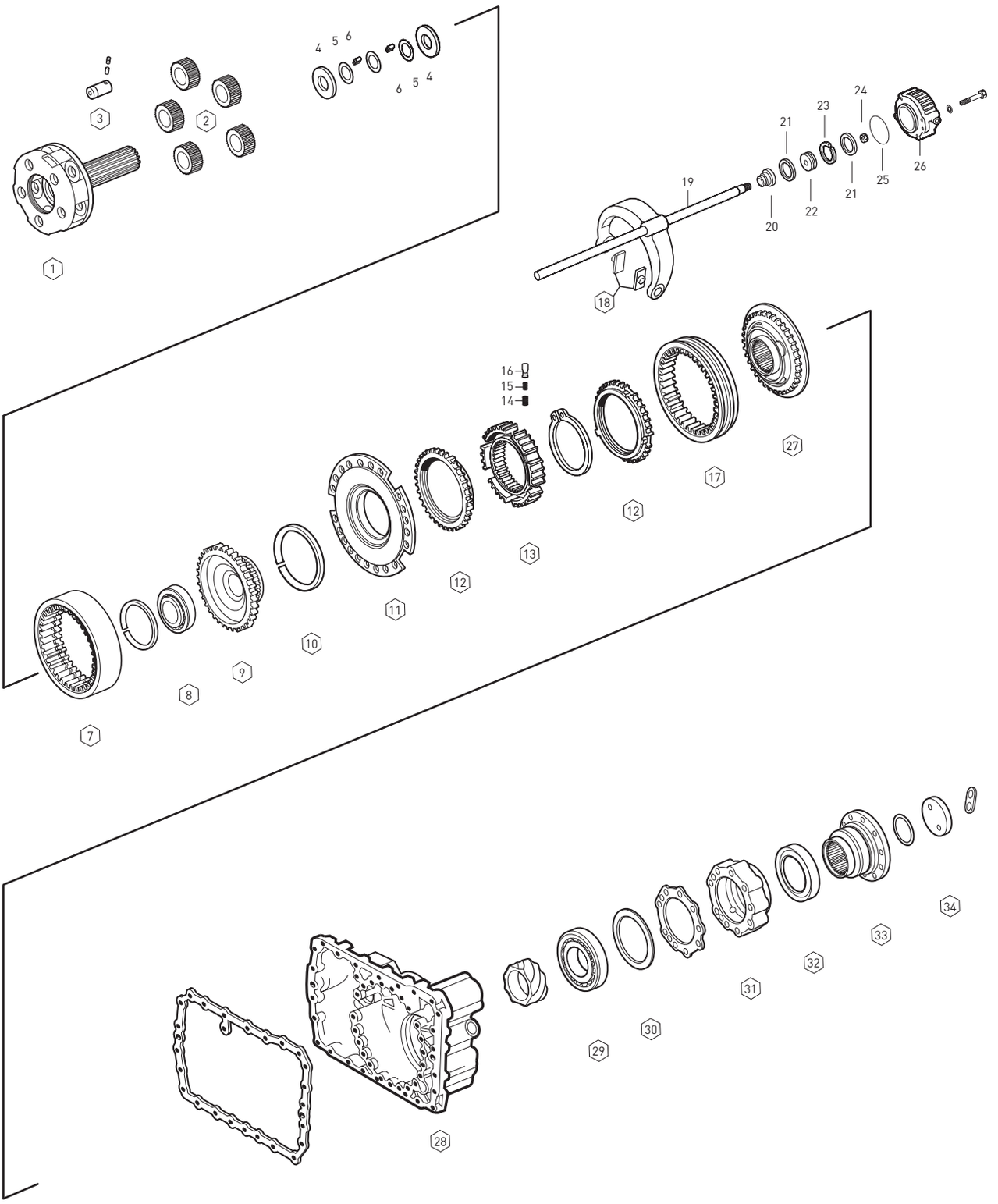

Original parts names, oem numbers, symbols and descriptions used in this catalogue are for reference purposes only.

Fig.	Kacmaz No.	Oem No	Oem Old No	Pcs.	Ürün Tanımı	Description	Sizes	Notes	SG 11.46-0.85	DG 13.68-1.00	SG 14.29-0.82	DG 17.06-1.00
1	K20.00613	1297 232 039	(1297 232 027)	1	ŞANZIMAN HEYKELİ	PLANETARY CARRIER		A	◆	◆		
1	K20.00603	1297 232 045	(1297 232 026)	1	ŞANZIMAN HEYKELİ	PLANETARY CARRIER		B			◆	◆
2	K20.00118	1297 232 023	(1297 332 022)	5	HEYKEL KOZA DİŞLİ TAKIMI	PLANETARY GEAR SET		A	◆	◆		
2	K20.00417	1297 232 024	(1297 332 028)	5	HEYKEL KOZA DİŞLİ TAKIMI	PLANETARY GEAR SET		B			◆	◆
3	K20.00418	1297 332 109	(1297 332 005)	5	HEYKEL KOZA DİŞLİ PİMİ	PLANET SHAFT			◆	◆	◆	◆
4	K20.01511	0501 306 212		10	HEYKEL KOZA DİŞLİ PULU	THRUST WASHER			◆	◆	◆	◆
5	K20.01512	0730 103 846		15	HEYKEL KOZA DİŞLİ PULU	THRUST WASHER			◆	◆	◆	◆
6	K20.01453	0750 119 109		120	HEYKEL KOZA DİŞ.TANE BİLYA	NEEDLE ROLLER	10X16.8mm		◆	◆	◆	◆
7	K20.00614	1297 332 080	(1297 332 036)	1	ÇEMBER DİŞLİ	RING WHEEL		A	◆	◆		
7	K20.00605	1295 332 086		1	ÇEMBER DİŞLİ 86 DİŞ	RING WHEEL 86 T		B			◆	◆
8	K20.01133	0750 116 165	(0635 338 049)	1	PLANET ÇAN DİŞLİ BİLYASI	ROLLER BEARING	80X110X16mm		◆	◆	◆	◆
9	K20.00615	1297 332 017		1	PLANET ÇAN DİŞLİ	CARRIER HUB		A	◆	◆		
9	K20.00607	1297 332 035		1	PLANET ÇAN DİŞLİ 86 DİŞ	CARRIER HUB 86 T		B			◆	◆
10	K20.01656	0730 505 056	(0730 505 055)	1	ÇEMBER DİŞLİ SEGMANI	SPRING RING	3.20mm		◆	◆	◆	◆
11	K20.00007	1296 233 006		1	TEPSİ SENKROMENÇ	FLANGE			◆	◆	◆	◆
12	K20.00038	1296 333 045	(1296 333 022)	2	AĞIR SERİ SENK.FRENLEME	SYNCHRONIZING CONE			◆	◆	◆	◆
13	K20.00363	1296 333 002		1	AĞIR SERİ YILDIZ DİŞLİ	GUIDE SLEEVE			◆	◆	◆	◆
14	K20.00469	0732 040 385		9	AĞIR SERİ YILDIZ DİŞLİ YAYI	SPRING			◆	◆	◆	◆
15	K20.00470	0732 040 386		9	AĞIR SERİ YILDIZ DİŞLİ YAYI	SPRING			◆	◆	◆	◆
16	K20.00471	1240 304 278		9	AĞIR SERİ YILDIZ DİŞLİ FİŞEĞİ	PRESSURE PIECE			◆	◆	◆	◆
17	K20.00039	1296 333 023		1	AĞIR SERİ SENK. HALKA	ENGAGING SLEEVE			◆	◆	◆	◆
18	K20.00341	1296 334 004		2	AĞIR SERİ HİLAL PABUCU	SLIDING PAD			◆	◆	◆	◆
19		1312 234 002		1	AĞIR SERİ HİLALİ	GEAR SHIFT FORK			◆	◆	◆	◆
20	K20.01016	0750 112 034		1	AĞIR SERİ HİLAL MİL KEÇESİ	FLANGE PACKING	25.0X38.0X14.2mm		◆	◆	◆	◆
21	K20.01024	0734 317 150	(0750 112 019)	2	AĞIR SERİ HAVA KEÇESİ	SEALING RING	80.0X90.0X4.8mm		◆	◆	◆	◆
22		1296 334 039		1	AĞIR SERİ HİLAL MİL PİSTONU	PISTON			◆	◆	◆	◆
23	K20.01657	0750 112 066		1	AĞIR SERİ HİLAL MİL FİBERİ	GUIDE RING			◆	◆	◆	◆
24	K20.01774	0737 006 095		1	AĞIR SERİ HİLAL MİL SOMUNU	NUT	M16X1.5mm		◆	◆	◆	◆
25		0634 314 019		1	AĞIR SERİ SİLİNDİR ORİNGİ	O-RING	94.0X3.0mm		◆	◆	◆	◆
26	K20.00845	1295 334 075		1	AĞIR SERİ SİLİNDİR GÖVDESİ	CYLINDER			◆	◆	◆	◆
27	K20.00006	1313 233 001	(1297 233 018)	1	SERİ SENKROMENÇ	ENGAGING RING	38spl.		◆	◆	◆	◆
28		1296 301 133		1	ŞANZIMAN ARKA GÖVDE	HOUSING			◆	◆	◆	◆
29	K20.01134	0750 116 002		1	ŞANZIMAN KUTU BİLYASI	ROLLER BEARING	90X160X30mm		◆	◆	◆	◆
30	K20.01658	0730 100 115		1	ŞANZ.ARKA BİLYA RAYNELİ	SHIM	0.30mm		◆	◆	◆	◆
30	K20.01659	0730 100 116		1	ŞANZ.ARKA BİLYA RAYNELİ	SHIM	0.20mm		◆	◆	◆	◆
30	K20.01660	2001660		1	ŞANZ.ARKA BİLYA RAYNELİ	SHIM	0.10mm		◆	◆	◆	◆
31		1295 231 001		1	ŞANZ.ARKA BİLYA KAPAĞI	BEARING COVER			◆	◆	◆	◆
32	K20.01013	0750 111 341		1	ŞANZ.ARKA KAPAK KEÇESİ	OIL SEAL	105.0X130.0X12mm		◆	◆	◆	◆
33	K20.00370	1297 338 041		1	ŞANZIMAN FLANŞI	COMPANION FLANGE	4-H,Ø180mm		◆	◆	◆	◆
33	K20.00429	1297 338 038		1	ŞANZIMAN FLANŞI	COMPANION FLANGE	10-H,Ø180mm		◆	◆	◆	◆
34	K20.01661	1295 332 051		1	ŞANZIMAN FLANŞ PULU	WASHER			◆	◆	◆	◆

NOTES :

A : Alphabetical letters used in conjunction with these products are classified.
B : Alphabetical letters used in conjunction with these products are classified.

NOTLAR :

A : Alfabetik harf ile sınıflandırılan ürünler, birlikte kullanılır.
B : Alfabetik harf ile sınıflandırılan ürünler, birlikte kullanılır.

Original parts names, oem numbers, symbols and descriptions used in this catalogue are for reference purposes only.

SYNCHRONIZER KIT CONST.

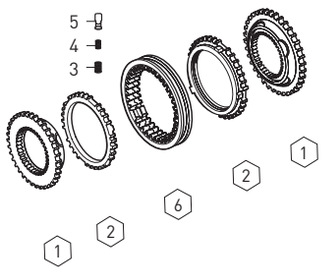

Fig.	Kacmaz No.	Oem No	Oem Old No	Pcs.	Ürün Tanımı	Description
	K20.00486	1295 298 936		Kit	TAKVİYE SENKROMENÇ KİT	SYNCHRONIZER KIT Const
1	K20.00019	1295 304 278		2	TAKVİYE SENKROMENÇ	ENGAGING RING
2	K20.00021	1304 304 686	(1295 304 004)	2	TAKVİYE SENK.FRENLEME	SYNCHRONIZING CONE
3	K20.00469	0732 040 385		3	TAKVİYE YILDIZ DİŞLİ YAYI	SPRING
4	K20.00470	0732 040 386		3	TAKVİYE YILDIZ DİŞLİ YAYI	SPRING
5	K20.00471	1240 304 278		3	TAK.YILDIZ DİŞLİ FİŞEĞİ	PRESSURE PIECE
6	K20.00020	1295 304 002		1	TAKVİYE SENK.HALKA	ENGAGING SLEEVE

SYNCHRONIZER KIT 3rd/4th

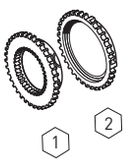

Fig.	Kacmaz No.	Oem No	Oem Old No	Pcs.	Ürün Tanımı	Description
	K20.00503	1297 204 071		Kit	PRİZ.SENKROMENÇ KİT	SYNCH.KIT 3rd/4th
1	K20.00078	1297 304 369		1	PRİZ.SENKROMENÇ	ENGAGING RING
2	K20.00108	1297 304 484	(1297 304 402)	1	PRİZ.SENK.FRENLEME	SYNCHRONIZING CONE

SYNCHRONIZER KIT 3rd/4th

Fig.	Kacmaz No.	Oem No	Oem Old No	Pcs.	Ürün Tanımı	Description
	K20.00504	1297 204 069		Kit	3./4.VİT.HALKA YILDIZ KİTİ	SYNCH.KIT 3rd/4th
1	K20.00081	1297 304 446		1	3./4.VİT.YILDIZ DİŞLİ	GUIDE SLEEVE
2	K20.00111	1297 304 436		3	3./4.VİT.YILDIZ DİŞLİ FİŞEĞİ	PRESSURE PIECE
3	K20.00110	0732 040 409		3	3./4.VİT.YILDIZ DİŞLİ YAYI	SPRING
4	K20.00098	1310 304 202	(1312 302 057)	1	3./4.VİT.SENK.HALKA	ENGAGING SLEEVE
			(1310 304 174)			

SYNCHRONIZER KIT 3rd/4th

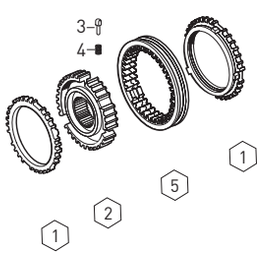

Fig.	Kacmaz No.	Oem No	Oem Old No	Pcs.	Ürün Tanımı	Description
	K20.00505	1297 204 054		Kit	3./4.VİT.SENKROMENÇ KİT	SYNCH.KIT 3rd/4th
1	K20.00108	1297 304 484	(1297 304 402)	2	3./4.VİT.FRENLEME	SYNCH.CONE
2	K20.00081	1297 304 446		1	3./4.VİT.YILDIZ DİŞLİ	GUIDE SLEEVE
3	K20.00111	1297 304 436		3	3./4.VİT.YILDIZ DİŞLİ FİŞEĞİ	PRESSURE PIECE
4	K20.00110	0732 040 409		3	3./4.VİT.YILDIZ DİŞLİ YAYI	SPRING
5	K20.00098	1310 304 202	(1312 302 057)	1	3./4.VİT.SENK.HALKA	ENGAGING SLEEVE
			(1310 304 174)			

SYNCHRONIZER KIT 3rd/4th

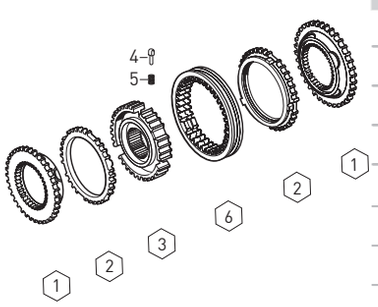

Fig.	Kacmaz No.	Oem No	Oem Old No	Pcs.	Ürün Tanımı	Description
	K20.00506	1297 298 959		Kit	3./4.VİT.SENKROMENÇ KİT	SYNCH.KIT 3rd/4th
1	K20.00078	1297 304 369		2	3./4.VİT.SENKROMENÇ	ENGAGING RING
2	K20.00108	1297 304 484	(1297 304 402)	2	3./4.VİT.FRENLEME	SYNCH.CONE
3	K20.00081	1297 304 446		1	3./4.VİT.YILDIZ DİŞLİ	GUIDE SLEEVE
4	K20.00111	1297 304 436		3	3./4.VİT.YILDIZ DİŞLİ FİŞEĞİ	PRESSURE PIECE
5	K20.00110	0732 040 409		3	3./4.VİT.YILDIZ DİŞLİ YAYI	SPRING
6	K20.00098	1310 304 202	(1312 302 057)	1	3./4.VİT.SENK.HALKA	ENGAGING SLEEVE
			(1310 304 174)			

Original parts names, oem numbers, symbols and descriptions used in this catalogue are for reference purposes only.

Fig.	Kacmaz No.	Oem No	Oem Old No	Pcs.	Ürün Tanımı	Description
	K20.00507	1297 204 070		Kit	1./2.VİT.SENKROMENÇ KİT	SYNCH.KIT 1st/2nd
1	K20.00079	1297 304 371		1	1./2.VİT.SENKROMENÇ	ENGAGING RING
2	K20.00112	1297 304 485	(1297 304 401)	1	1./2.VİT.SENK.FRENLEME	SYNCHRONIZING CONE

SYNCHRONIZER KIT 1st/2nd

Fig.	Kacmaz No.	Oem No	Oem Old No	Pcs.	Ürün Tanımı	Description
	K20.00508	1297 204 067		Kit	1./2.VİT.HALKA YILDIZ KİTİ	SYNCH.KIT 1st/2nd
1	K20.00428	1297 304 445		1	1./2.VİT.YILDIZ DİŞLİ	GUIDE SLEEVE
2	K20.00111	1297 304 436		3	1./2.VİT.YILDIZ DİŞLİ FİŞEĞİ	PRESSURE PIECE
3	K20.00110	0732 040 409		3	1./2.VİT.YILDIZ DİŞLİ YAYI	SPRING
4	K20.00082	1297 304 450	(1297 304 415)	1	1./2.VİT.SENK.HALKA	ENGAGING SLEEVE

SYNCHRONIZER KIT 1st/2nd

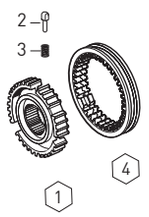

Fig.	Kacmaz No.	Oem No	Oem Old No	Pcs.	Ürün Tanımı	Description
	K20.00509	1297 204 053		Kit	1./2.VİT.SENKROMENÇ KİT	SYNCH.KIT 1st/2nd
1	K20.00112	1297 304 485	(1297 304 401)	2	1./2.VİT.FRENLEME	SYNCH.CONE
2	K20.00428	1297 304 445		1	1./2.VİT.YILDIZ DİŞLİ	GUIDE SLEEVE
3	K20.00111	1297 304 436		3	1./2.VİT.YILDIZ DİŞLİ FİŞEĞİ	PRESSURE PIECE
4	K20.00110	0732 040 409		3	1./2.VİT.YILDIZ DİŞLİ YAYI	SPRING
5	K20.00082	1297 304 450	(1297 304 415)	1	1./2.VİT.SENK.HALKA	ENGAGING SLEEVE

SYNCHRONIZER KIT 1st/2nd

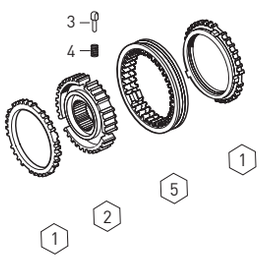

Fig.	Kacmaz No.	Oem No	Oem Old No	Pcs.	Ürün Tanımı	Description
	K20.00510	1297 298 957		Kit	1./2.VİT.SENKROMENÇ KİT	SYNCH.KIT 1st/2nd
1	K20.00079	1297 304 371		2	1./2.VİT.SENKROMENÇ	ENGAGING RING
2	K20.00112	1297 304 485	(1297 304 401)	2	1./2.VİT.FRENLEME	SYNCH.CONE
3	K20.00428	1297 304 445		1	1./2.VİT.YILDIZ DİŞLİ	GUIDE SLEEVE
4	K20.00111	1297 304 436		3	1./2.VİT.YILDIZ DİŞLİ FİŞEĞİ	PRESSURE PIECE
5	K20.00110	0732 040 409		3	1./2.VİT.YILDIZ DİŞLİ YAYI	SPRING
6	K20.00082	1297 304 450	(1297 304 415)	1	1./2.VİT.SENK.HALKA	ENGAGING SLEEVE

SYNCHRONIZER KIT 1st/2nd

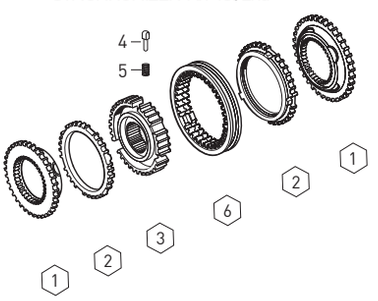

Fig.	Kacmaz No.	Oem No	Oem Old No	Pcs.	Ürün Tanımı	Description
	K20.00511	1297 298 912		Kit	AĞIR SERİ DİŞLİ TAKIMI	PLANETARY GEAR KIT
1	K20.00118	1297 232 023	(1297 332 022)	5	HEYKEL KOZA DİŞLİSİ	PLANETARY GEAR
2	K20.00418	1297 332 109	(1297 332 005)	5	HEYKEL KOZA DİŞLİ PİMİ	PLANETARY SHAFT
3	K20.01511	0501 306 212		10	HEYKEL KOZA DİŞLİ PULU	THRUST WASHER
4	K20.01512	0730 103 846		15	HEYKEL KOZA DİŞLİ PULU	THRUST WASHER
5	K20.01453	0750 119 109		120	HEYKEL KOZA DİŞ.BİLYASI	NEEDLE ROLLER (10X16.8)

PLANETARY GEAR KIT

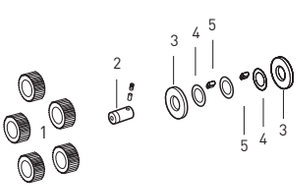

Original parts names, oem numbers, symbols and descriptions used in this catalogue are for reference purposes only.

PLANETARY GEAR KIT

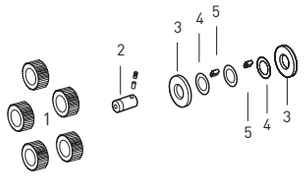

Fig.	Kacmaz No.	Oem No	Oem Old No	Pcs.	Ürün Tanımı	Description
	K20.00512	1297 298 919		Kit	AĞIR SERİ DİŞLİ TAKIMI	PLANETARY GEAR KIT
1	K20.00417	1297 232 024	(1297 332 028)	5	HEYKEL KOZA DİŞLİSİ	PLANETARY GEAR
2	K20.00418	1297 332 109	(1297 332 005)	5	HEYKEL KOZA DİŞLİ PİMİ	PLANETARY SHAFT
3	K20.01511	0501 306 212		10	HEYKEL KOZA DİŞLİ PULU	THRUST WASHER
4	K20.01512	0730 103 846		15	HEYKEL KOZA DİŞLİ PULU	THRUST WASHER
5	K20.01453	0750 119 109		120	HEYKEL KOZA DİŞ.BİLYASI	NEEDLE ROLLER (10X16.8)

SYNCHRONIZER KIT PLANETARY

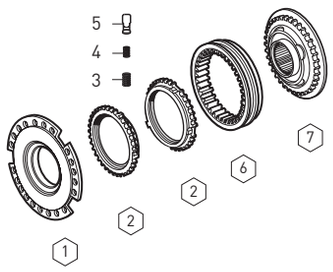

Fig.	Kacmaz No.	Oem No	Oem Old No	Pcs.	Ürün Tanımı	Description
	K20.00498	1295 298 939		Kit	AĞIR SERİ SENK.KİT	SYNCHRONIZER KIT
1	K20.00007	1296 233 006		1	TEPSİ SENKROMENÇ	FLANGE
2	K20.00038	1296 333 045	(1296 333 022)	2	AĞIR SERİ FRENLEME	SYNCHRONIZING CONE
3	K20.00469	0732 040 385		9	AĞIR SERİ YILDIZ DİŞLİ YAYI	SPRING
4	K20.00470	0732 040 386		9	AĞIR SERİ YILDIZ DİŞLİ YAYI	SPRING
5	K20.00471	1240 304 278		9	AĞIR SERİ YILDIZ DİŞ.FİŞEĞİ	PRESSURE PIECE
6	K20.00039	1296 333 023		1	AĞIR SERİ SENK.HALKA	ENGAGING SLEEVE
7	K20.00006	1313 233 001	(1297 233 018)	1	SERİ SENKROMENÇ	ENGAGING RING

SYNCHRONIZER KIT PLANETARY

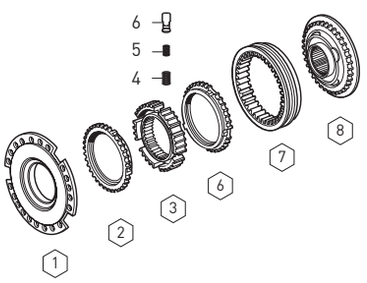

Fig.	Kacmaz No.	Oem No	Oem Old No	Pcs.	Ürün Tanımı	Description
	K20.00500	1295 298 950		Kit	AĞIR SERİ SENK.KİT	SYNCHRONIZER KIT
1	K20.00007	1296 233 006		1	TEPSİ SENKROMENÇ	FLANGE
2	K20.00038	1296 333 045	(1296 333 022)	2	AĞIR SERİ FRENLEME	SYNCHRONIZING CONE
3	K20.00363	1296 333 002		1	AĞIR SERİ YILDIZ DİŞLİ	GUIDE SLEEVE
4	K20.00469	0732 040 385		9	AĞIR SERİ YILDIZ DİŞLİ YAYI	SPRING
5	K20.00470	0732 040 386		9	AĞIR SERİ YILDIZ DİŞLİ YAYI	SPRING
6	K20.00471	1240 304 278		9	AĞIR SERİ YILDIZ DİŞ.FİŞEĞİ	PRESSURE PIECE
7	K20.00039	1296 333 023		1	AĞIR SERİ SENK.HALKA	ENGAGING SLEEVE
8	K20.00006	1313 233 001	(1297 233 018)	1	SERİ SENKROMENÇ	ENGAGING RING

GEARBOX GASKET KIT

Fig.	Kacmaz No.	Oem No	Oem Old No	Pcs.	Ürün Tanımı	Description
1	K20.01584	1295 298 915		Kit	ŞANZIMAN CONTA TAKIMI	GASKET KIT
2		1313 301 038		1	ŞANZ.ÖN GÖVDE CONTASI	GASKET
3		1313 302 014		1	PRİZ.KEÇE KAPAK CONTASI	GASKET
4		1313 306 012		1	ŞANZ.HİLALİ KAPAK CONTASI	GASKET
5		1313 307 002		1	ŞANZ.ÖN GÖVDE ARKA CONTA	GASKET
5		1313 307 020		2	ŞANZ.KULE KAPAK CONTASI	GASKET
5		1313 307 003		1	ŞANZ.KULE KAPAK CONTASI	GASKET
5		1313 307 004		1	ŞANZ.KULE ALT KAPAK CONTASI	GASKET
5		1313 307 022		1	ŞANZ.KULE ÜST KAPAK CONTASI	GASKET
6		1313 301 037		1	ŞANZ.ARKA GÖVDE CONTASI	GASKET
7		1313 301 036		1	ŞANZ.BİLYA KAPAK CONTASI	GASKET
8	K20.02108	1238 308 201		1	PTO BAĞLANTI KAPAK CONTASI	GASKET
9		1313 307 005		1	ŞANZ.İSTİNAT KAPAK CONTASI	GASKET
10		1313 307 006		1	ŞANZ.İSTİNAT KAPAK CONTASI	GASKET

Original parts names, oem numbers, symbols and descriptions used in this catalogue are for reference purposes only.

Fig.	Kacmaz No.	Oem No	Oem Old No	Pcs.	Ürün Tanımı	Description
1		1296 313 131		1	P.KİLİT EMNİYET SACI	RETAINING RING
2		0730 104 627		1	PARÇALI KİLİT	SPLIT RING
3		1296 313 238		1	PTO MİL KOVANI	SLIDING SLEEVE
4		0730 104 628		1	PTO DİŞLİ AYAR PULU	THRUST WASHER
5		1296 313 082		1	PTO DİŞLİ	GEAR 33 T
5		1296 313 083		1	PTO DİŞLİ	GEAR 36 T
5		1296 313 084		1	PTO DİŞLİ	GEAR 38 T
5		1296 313 085		1	PTO DİŞLİ	GEAR 39 T
5		1296 313 086		1	PTO DİŞLİ	GEAR 46 T
6	K20.00556	1296 213 028		1	PTO MİLİ DÜZ	INTERM.SHAFT
7	K20.00555	1296 213 028		1	PTO MİLİ FREZELİ	INTERM.SHAFT (Milled)
8		1296 313 125		1	PTO MİL SOMUNU	NUT
9		0735 410 139		1	PTO MİL BİLYASI	ROLLER BEARING
10		7429 032 102		1	PTO BİLYA KAPAK PULU	THRUST WASHER
11		1232 304 062		1	PTO BİLYA KAPAK RAYNELİ	SHIM (1.00mm)
11		1232 304 063		1	PTO BİLYA KAPAK RAYNELİ	SHIM (0.90mm)
11		1232 304 072		1	PTO BİLYA KAPAK RAYNELİ	SHIM (0.70mm)
12		1250 313 190		1	PTO BAĞLANTI KAPAĞI	COVER
13	K20.01013	0750 111 341		1	ŞANZ.ARKA KAPAK KEÇESİ	OIL SEAL

P.T.O. (POWER TAKE OFF)

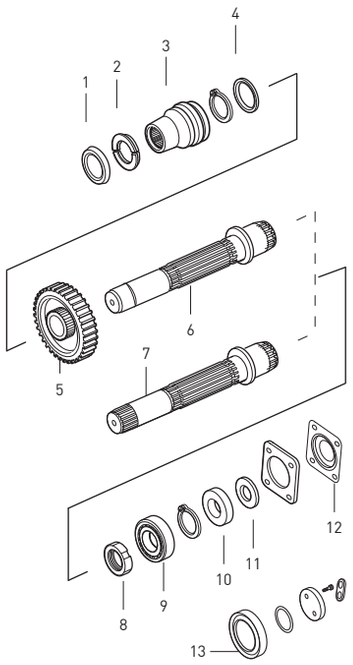

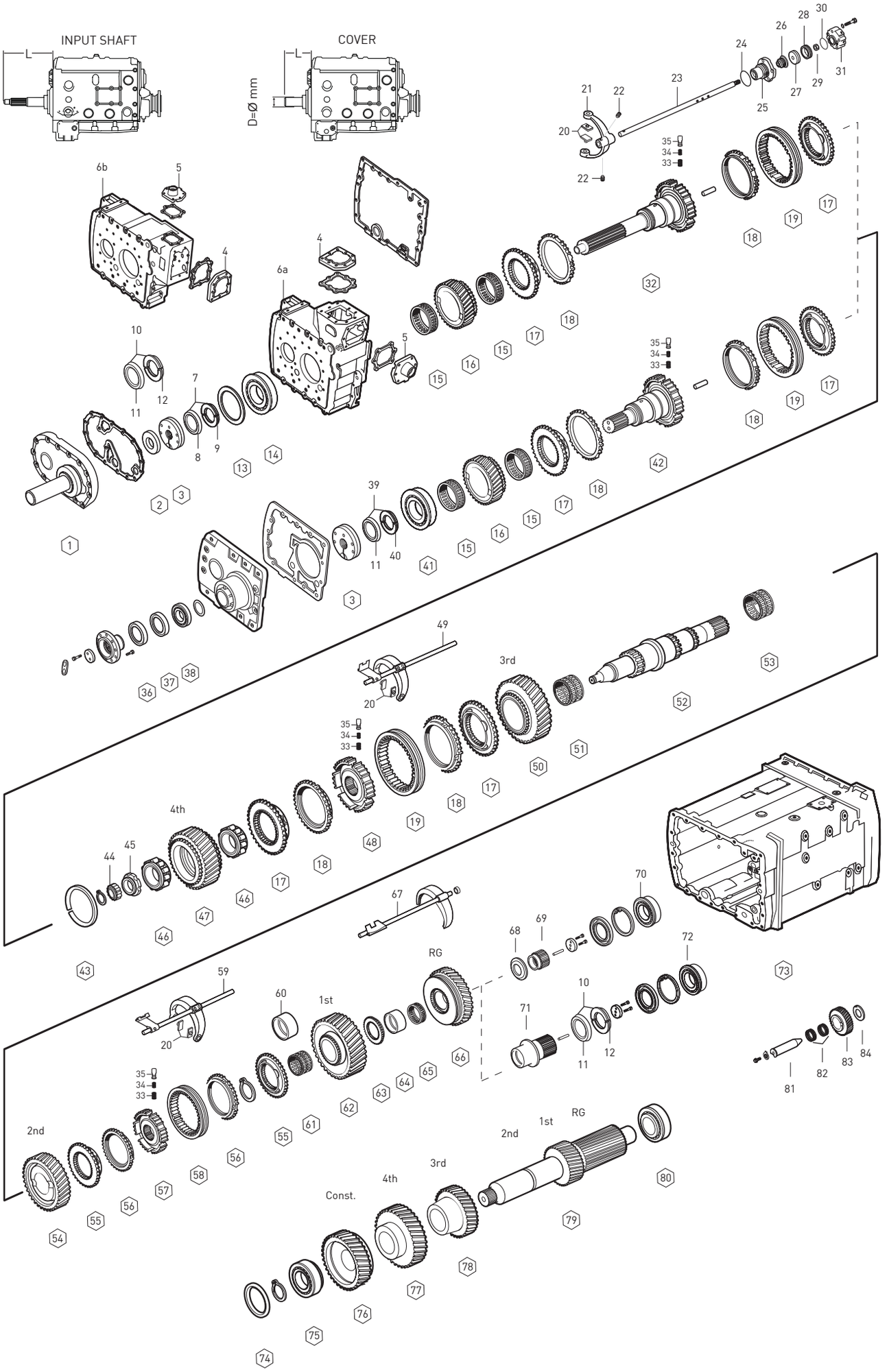

Original parts names, oem numbers, symbols and descriptions used in this catalogue are for reference purposes only.

Fig.	Kacmaz No.	Oem No	Oem Old No	Pcs.	Ürün Tanımı	Description	Sizes	Notes	SG 11.46-0.85	DG 13.68-1.00	SG 14.29-0.82	DG 17.06-1.00
1	K20.00611	1297 302 239		1	PRİZDİREK KEÇE KAPAĞI	COVER	L=147 D=60	A	◆	◆		
1	K20.00612	1297 302 042		1	PRİZDİREK KEÇE KAPAĞI	COVER	L=170 D=60	BD	◆	◆	◆	◆
2	K20.01003	0734 310 387	(0734 310 386)	1	PRİZDİREK KEÇESİ	OIL SEAL	55X75X8mm		◆	◆	◆	◆
3	K20.00484	1295 202 041		1	YAĞ POMPASI	OIL PUMP			◆	◆	◆	◆
4	K20.00561	1295 307 479		1	ŞANZIMAN KULE KAPAĞI	COVER			◆	◆	◆	◆
5	K20.00597	1295 307 434		1	ŞANZIMAN KULE KAPAĞI	COVER			◆	◆	◆	◆
6a		1295 301 289	(1295 301 131)	1	ŞANZIMAN ÖN GÖVDE	HOUSING		A		◆		
6a		1295 301 293	(1295 301 134)	1	ŞANZIMAN ÖN GÖVDE	HOUSING		AB	◆			
6b		1296 301 200		1	ŞANZIMAN ÖN GÖVDE	HOUSING		D	◆		◆	
6b		1296 301 205		1	ŞANZIMAN ÖN GÖVDE	HOUSING		BD			◆	◆
6b		1296 301 207		1	ŞANZIMAN ÖN GÖVDE	HOUSING		C	◆	◆		
6b		1296 301 208		1	ŞANZIMAN ÖN GÖVDE	HOUSING		C			◆	
6b		1296 301 213		1	ŞANZIMAN ÖN GÖVDE	HOUSING		D		◆		
7	K20.01541	1499 298 003		1	EMN.SACI VE P.KİLİT TAK.	SPLIT RING KIT	4.00mm	(1)	◆	◆	◆	◆
7	K20.01543	1499 298 002		1	EMN.SACI VE P.KİLİT TAK.	SPLIT RING KIT	3.90mm	(2)	◆	◆	◆	◆
7	K20.01545	1499 298 001		1	EMN.SACI VE P.KİLİT TAK.	SPLIT RING KIT	3.80mm	(3)	◆	◆	◆	◆
8	K20.01547	0730 062 579		1	KİLİT SEGMAN EMN.SACI	RETAINING RING			◆	◆	◆	◆
9	K20.01542	0730 105 156		2	PARÇALI KİLİT	SPLIT RING	4.00mm		◆	◆	◆	◆
9	K20.01544	0730 105 155		2	PARÇALI KİLİT	SPLIT RING	3.90mm		◆	◆	◆	◆
9	K20.01546	0730 105 154		2	PARÇALI KİLİT	SPLIT RING	3.80mm		◆	◆	◆	◆
10	K20.01638	1499 298 090		1	EMN.SACI VE P.KİLİT TAK.	SPLIT RING KIT	4.30mm	(4)	◆	◆	◆	◆
10	K20.01640	1499 298 114		1	EMN.SACI VE P.KİLİT TAK.	SPLIT RING KIT	4.20mm	(5)	◆	◆	◆	◆
10	K20.01642	1499 298 100		1	EMN.SACI VE P.KİLİT TAK.	SPLIT RING KIT	4.10mm	(6)	◆	◆	◆	◆
10	K20.01548	1499 298 098		2	EMN.SACI VE P.KİLİT TAK.	SPLIT RING KIT	4.00mm	(7)	◆	◆	◆	◆
10	K20.01550	1499 298 096		2	EMN.SACI VE P.KİLİT TAK.	SPLIT RING KIT	3.90mm	(8)	◆	◆	◆	◆
10	K20.01552	1499 298 094		2	EMN.SACI VE P.KİLİT TAK.	SPLIT RING KIT	3.80mm	(9)	◆	◆	◆	◆
11	K20.01554	0730 061 816		2	PARÇALI KİLİT EMN.SACI	RETAINING RING			◆	◆	◆	◆
12	K20.01639	0730 103 244		2	PARÇALI KİLİT	SPLIT RING	4.30mm		◆	◆	◆	◆
12	K20.01641	0730 104 337		2	PARÇALI KİLİT	SPLIT RING	4.20mm		◆	◆	◆	◆
12	K20.01643	0730 103 941		2	PARÇALI KİLİT	SPLIT RING	4.10mm		◆	◆	◆	◆
12	K20.01549	0730 103 939		4	PARÇALI KİLİT	SPLIT RING	4.00mm		◆	◆	◆	◆
12	K20.01551	0730 103 937		4	PARÇALI KİLİT	SPLIT RING	3.90mm		◆	◆	◆	◆
12	K20.01553	0730 103 935		4	PARÇALI KİLİT	SPLIT RING	3.80mm		◆	◆	◆	◆
13	K20.01644	0730 102 504		1	PRİZ.ÖN BİLYA RAYNELİ	SHIM	0.60mm		◆	◆	◆	◆
13	K20.01645	2001645		1	PRİZ.ÖN BİLYA RAYNELİ	SHIM	0.30mm		◆	◆	◆	◆
13	K20.01646	2001646		1	PRİZ.ÖN BİLYA RAYNELİ	SHIM	0.20mm		◆	◆	◆	◆
13	K20.01647	2001647		1	PRİZ.ÖN BİLYA RAYNELİ	SHIM	0.10mm		◆	◆	◆	◆
14	K20.01102	0750 118 130	(0750 118 131)	1	PRİZDİREK ÖN BİLYA	ROLLER BEARING	80X150X27.5mm		◆	◆	◆	◆
15	K20.01317	0735 320 896		2	PRİZDİREK MASURA BİLYA	NEEDLE CAGE	88X96X29mm		◆	◆	◆	◆
16	K20.00048	1297 302 177	(1297 302 070)	1	TAKVİYE DİŞLİSİ 30 DİŞ	CONSTANT GEAR 30 T		CDE	◆			
16	K20.00049	1297 302 176	(1297 302 071)	1	TAKVİYE DİŞLİSİ 28 DİŞ	CONSTANT GEAR 28 T		AD		◆		

NOTES :

ABCDE alfabetic letters are used in conjunction with the encoded parts.

(1) This kit includes (1499 298 003) = 2pcs 0730 105 156 + 1pcs 0730 062 579
(2) This kit includes (1499 298 002) = 2pcs 0730 105 155 + 1pcs 0730 062 579
(3) This kit includes (1499 298 001) = 2pcs 0730 105 154 + 1pcs 0730 062 579
(4) This kit includes (1499 298 090) = 2pcs 0730 103 244 + 1pcs 0730 061 816
(5) This kit includes (1499 298 114) = 2pcs 0730 104 337 + 1pcs 0730 061 816
(6) This kit includes (1499 298 100) = 2pcs 0730 103 941 + 1pcs 0730 061 816
(7) This kit includes (1499 298 098) = 2pcs 0730 103 939 + 1pcs 0730 061 816
(8) This kit includes (1499 298 096) = 2pcs 0730 103 937 + 1pcs 0730 061 816
(9) This kit includes (1499 298 094) = 2pcs 0730 103 935 + 1pcs 0730 061 816

NOTLAR :

ABCDE alfabetik harfler ile kodlanan parçalar birlikte kullanılır.

(1) (1499 298 003) nolu kit bu parçalardan oluşur = 2pcs 0730 105 156 + 1pcs 0730 062 579
(2) (1499 298 002) nolu kit bu parçalardan oluşur = 2pcs 0730 105 155 + 1pcs 0730 062 579
(3) (1499 298 001) nolu kit bu parçalardan oluşur = 2pcs 0730 105 154 + 1pcs 0730 062 579
(4) (1499 298 090) nolu kit bu parçalardan oluşur = 2pcs 0730 103 244 + 1pcs 0730 061 816
(5) (1499 298 114) nolu kit bu parçalardan oluşur = 2pcs 0730 104 337 + 1pcs 0730 061 816
(6) (1499 298 100) nolu kit bu parçalardan oluşur = 2pcs 0730 103 941 + 1pcs 0730 061 816
(7) (1499 298 098) nolu kit bu parçalardan oluşur = 2pcs 0730 103 939 + 1pcs 0730 061 816
(8) (1499 298 096) nolu kit bu parçalardan oluşur = 2pcs 0730 103 937 + 1pcs 0730 061 816
(9) (1499 298 094) nolu kit bu parçalardan oluşur = 2pcs 0730 103 935 + 1pcs 0730 061 816

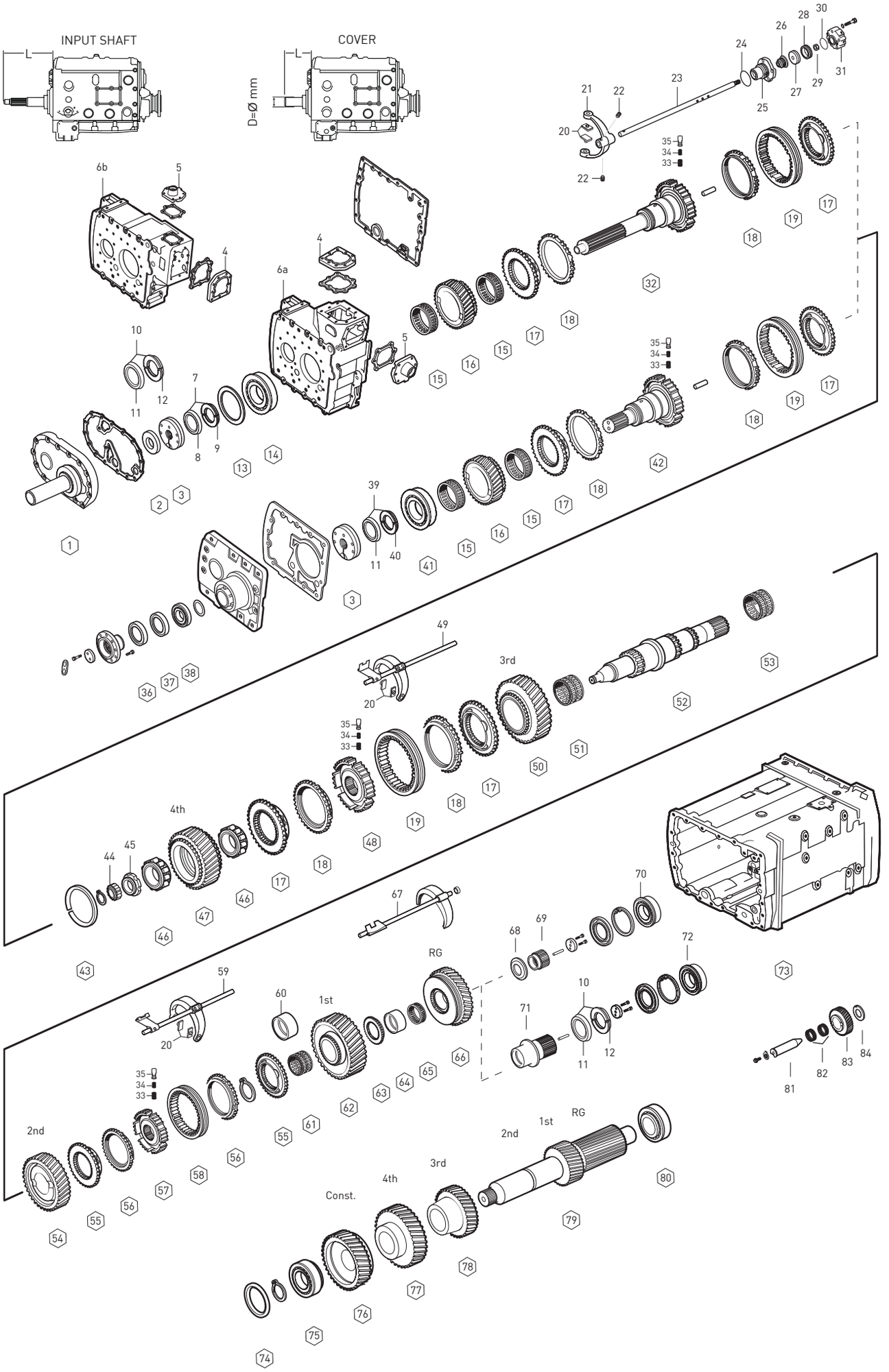

Original parts names, oem numbers, symbols and descriptions used in this catalogue are for reference purposes only.

Fig.	Kacmaz No.	Oem No	Oem Old No	Pcs.	Ürün Tanımı	Description	Sizes	Notes	SG 11.46-0.85	DG 13.68-1.00	SG 14.29-0.82	DG 17.06-1.00
16	K20.00050	1297 302 250	(1297 302 111)	1	TAKVİYE DİŞLİSİ 29 DİŞ	CONSTANT GEAR 29 T		ABDE			◆	
16	K20.00051	1297 302 241	(1297 302 079)	1	TAKVİYE DİŞLİSİ 26 DİŞ	CONSTANT GEAR 26 T		DE				◆
17	K20.00019	1295 304 278		4	3./ 4.VİT.TAK.SENKROMENÇ	ENGAGING RING			◆	◆	◆	◆
17	K20.00304	1297 304 041		4	3./ 4.VİT.TAK.SENKROMENÇ	ENGAGING RING			◆	◆	◆	◆
18	K20.00021	1304 304 686	(1295 304 004)	4	3./ 4.VİT.TAK.FRENLEME	SYNCHRONIZING CONE			◆	◆	◆	◆
19	K20.00020	1295 304 002		2	3./ 4.VİT.TAK.SENK.HALKA	ENGAGING SLEEVE			◆	◆	◆	◆
20	K20.00186	1295 306 132		6	TAKVİYE HİLAL PABUCU	SLIDING PAD			◆	◆	◆	◆
21		1313 312 002		1	TAKVİYE HİLALİ	G.SHIFT FORK			◆	◆	◆	◆
22	K20.01688	1315 312 047		2	TAKVİYE HİLAL VİDASI	SCREW	M12X1.0mm		◆	◆	◆	◆
23		1297 312 008		1	TAKVİYE HİLAL MİLİ	G.SHIFT RAIL			◆	◆	◆	◆
24		0634 313 671		1	TAKVİYE SİLİNDİR ORİNGİ	O-RING	80.0X3.0mm		◆	◆	◆	◆
25	K20.01738	1296 312 042	(1296 312 016)	1	TAKVİYE SİLİNDİR GÖVDESİ	CYLINDER			◆	◆	◆	◆
26	K20.01016	0750 112 034		1	TAKVİYE HİLAL MİL KEÇESİ	FLANGE PACKING	25.0X38.0X14.2mm		◆	◆	◆	◆
27		1296 312 053	(1296 312 047)	1	TAKVİYE HİLAL MİL PİSTONU	PISTON			◆	◆	◆	◆
28	K20.01021	0750 112 089		1	TAKVİYE HAVA KEÇESİ	DOUBLE PACKING	53.0X63.0X16.2mm		◆	◆	◆	◆
29	K20.01774	0737 006 095		1	TAKVİYE HİLAL MİL SOMUNU	NUT	M16X1.5mm		◆	◆	◆	◆
30		0634 314 018		1	TAKVİYE SİLİNDİR ORİNGİ	O-RING	59.0X2.0mm		◆	◆	◆	◆
31		0750 132 033		1	TAKVİYE VENTİLİ	5/2 WAY VALVE			◆	◆	◆	◆
32	K20.00041	1297 202 011		1	PRİZDİREK	INPUT SHAFT	L=286 SAE 2	A	◆	◆		
32	K20.00042	1297 202 045		1	PRİZDİREK	INPUT SHAFT	L=295 SAE 2	B	◆		◆	
32	K20.00043	1297 202 061	(1297 221 002)	1	PRİZDİREK	INPUT SHAFT	L=232	C	◆	◆	◆	
32	K20.00564	1297 202 053	(1297 302 231)	1	PRİZDİREK	INPUT SHAFT	L=320 SAE 2	D	◆	◆	◆	◆
33	K20.00469	0732 040 385		9	PRİZ.ve YILDIZ DİŞLİ YAYI	SPRING			◆	◆	◆	◆
34	K20.00470	0732 040 386		9	PRİZ.ve YILDIZ DİŞLİ YAYI	SPRING			◆	◆	◆	◆
35	K20.00471	1240 304 278		9	PRİZ.ve YILDIZ DİŞLİ FİŞEĞİ	PRESSURE PIECE			◆	◆	◆	◆
36	K20.01005	0734 300 140		1	PRİZDİREK KEÇESİ	OIL SEAL	70X90X10mm	E	◆			◆
37	K20.01006	0634 310 648		1	PRİZDİREK KEÇESİ	OIL SEAL	70X90X10mm	E	◆			◆
38	K20.01131	0750 117 651		1	ŞANZIMAN KAPAK BİLYASI	ROLLER BEARING	50X90X24.7mm	E	◆			◆
39	K20.01555	1499 298 129		1	EMN.SACI VE P.KİLİT TAK.	SPLIT RING KIT		E (10)	◆			◆
39	K20.01557	1499 298 127		1	EMN.SACI VE P.KİLİT TAK.	SPLIT RING KIT		E (11)	◆			◆
39	K20.01559	1499 298 125		1	EMN.SACI VE P.KİLİT TAK.	SPLIT RING KIT		E (12)	◆			◆
40	K20.01556	0730 106 162		2	PARÇALI KİLİT	SPLIT RING	(4.00mm)	E	◆			◆
40	K20.01558	0730 106 160		2	PARÇALI KİLİT	SPLIT RING	(3.90mm)	E	◆			◆
40	K20.01560	0730 106 158		2	PARÇALI KİLİT	SPLIT RING	(3.80mm)	E	◆			◆
41	K20.01103	0750 117 431		1	PRİZDİREK ÖN BİLYA	ROLLER BEARING	75X150X30.5mm	E	◆			◆
42	K20.00044	1297 202 044		1	PRİZDİREK (Kısa Tip)	INPUT SHAFT (Short Type)		E	◆			◆
43	K20.01518	0730 003 518		1	SENKROMENÇ AYAR SEKMANI	RING	6.30mm		◆	◆	◆	◆
43	K20.01519	0730 003 517		1	SENKROMENÇ AYAR SEKMANI	RING	6.00mm		◆	◆	◆	◆
43	K20.01520	0730 003 161		1	SENKROMENÇ AYAR SEKMANI	RING	5.10mm		◆	◆	◆	◆
43	K20.01521	0730 003 159		1	SENKROMENÇ AYAR SEKMANI	RING	4.50mm		◆	◆	◆	◆
43	K20.01522	0730 004 237		1	SENKROMENÇ AYAR SEKMANI	RING	4.00mm		◆	◆	◆	◆

NOTES :

ABCDE alfabetic letters are used in conjunction with the encoded parts.

(12) This kit includes (1499 298 129) = 2pcs 0730 106 162 + 1pcs 0730 061 816
(13) This kit includes (1499 298 127) = 2pcs 0730 106 160 + 1pcs 0730 061 816
(14) This kit includes (1499 298 125) = 2pcs 0730 106 158 + 1pcs 0730 061 816

NOTLAR :

ABCDE alfabetik harfler ile kodlananparçalar birlikte kullanılır.

(12) (1499 298 129) nolu kit bu parçalardan oluşur = 2pcs 0730 106 162 + 1pcs 0730 061 816
(13) (1499 298 127) nolu kit bu parçalardan oluşur = 2pcs 0730 106 160 + 1pcs 0730 061 816
(14) (1499 298 125) nolu kit bu parçalardan oluşur = 2pcs 0730 106 158 + 1pcs 0730 061 816

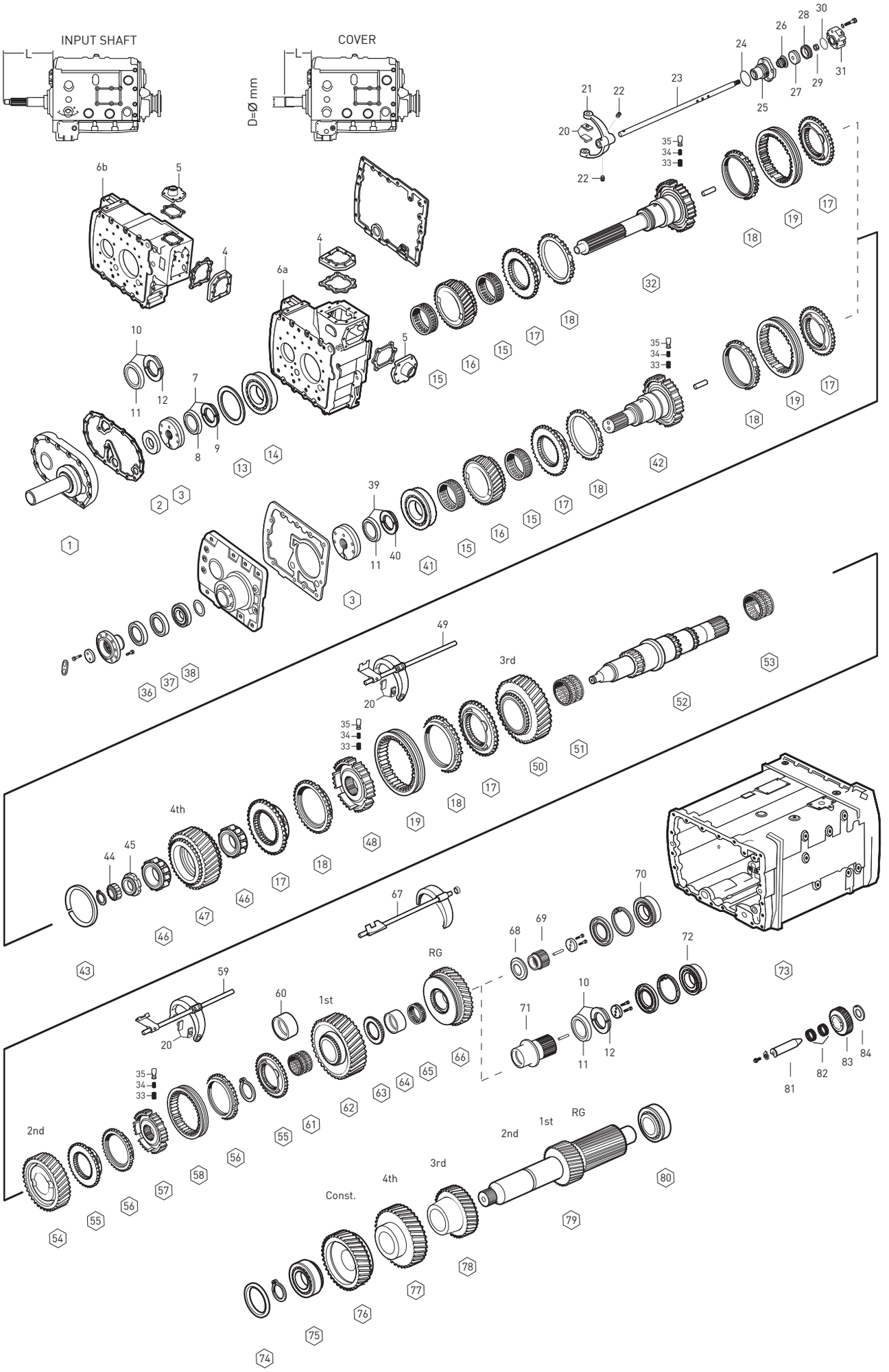

Original parts names, oem numbers, symbols and descriptions used in this catalogue are for reference purposes only.

Fig.	Kacmaz No.	Oem No	Oem Old No	Pcs.	Ürün Tanımı	Description	Sizes	Notes	SG 11.46-0.85	DG 13.68-1.00	SG 14.29-0.82	DG 17.06-1.00
44	K20.01108	0750 118 038		1	KAMALI MİL UÇ BİLYA	ROLLER BEARING	35X68X27.5mm		◆	◆	◆	◆
45	K20.00485	0737 502 092		1	KAMALI MİL SOMUNU	NUT	M60X1.5mm		◆	◆	◆	◆
46	K20.01111	0750 118 220	(0735 455 248)	2	4.VİTES DİŞLİ BİLYASI	ROLLER BEARING	63X97.5X37.5mm		◆	◆	◆	◆
47	K20.00063	1297 304 267	(1297 304 025)	1	4.VİTES DİŞLİSİ 28 DİŞ	GEAR 4th 28 T		CDE	◆			
47	K20.00064	1297 304 260	(1297 304 026)	1	4.VİTES DİŞLİSİ 30 DİŞ	GEAR 4th 30 T		AD		◆		
47	K20.00065	1297 304 318	(1297 304 175)	1	4.VİTES DİŞLİSİ 26 DİŞ	GEAR 4th 26 T		ABDE			◆	
47	K20.00066	1297 304 413	(1297 304 285)	1	4.VİTES DİŞLİSİ 29 DİŞ	GEAR 4th 29 T		DE				◆
48	K20.00025	1297 304 031		1	3./ 4.VİT.TAK.YILDIZ DİŞLİ	GUIDE SLEEVE			◆	◆	◆	◆
49		1297 206 110	(1297 206 053)	1	3./4.VİTES HİLALİ	GEAR SHIT FORK 3rd/4th						◆
49		1297 206 103	(1297 206 049)	1	3./4.VİTES HİLALİ	GEAR SHIT FORK 3rd/4th			◆	◆	◆	
50	K20.00067	1297 304 266	(1297 304 019)	1	3.VİTES DİŞLİSİ 32 DİŞ	GEAR 3rd 32 T		ABCD	◆		◆	
50	K20.00068	1297 304 261	(1297 304 020)	1	3.VİTES DİŞLİSİ 34 DİŞ	GEAR 3rd 34 T		AD		◆		
50	K20.00077	1297 304 414	(1297 304 122)	1	3.VİTES DİŞLİSİ 34 DİŞ	GEAR 3rd 34 T		DE				◆
51	K20.01313	0735 320 451		1	3.VİT.DİŞLİ MASURA BİLYA	NEEDLE CAGE	82X90X60mm		◆	◆	◆	◆
52	K20.00407	1297 304 181		1	KAMALI MİL	MAIN SHAFT		ACDE	◆	◆		
52	K20.00408	1297 304 193		1	KAMALI MİL	MAIN SHAFT		ABDE			◆	◆
53	K20.01318	0735 320 452		1	2.VİT. DİŞLİ MASURA BİLYA	NEEDLE CAGE	82X90X55mm		◆	◆	◆	◆
54	K20.00069	1297 304 269	(1297 304 016)	1	2.VİTES DİŞLİSİ 37 DİŞ	GEAR 2nd 37 T		BCDE	◆		◆	
54	K20.00070	1297 304 442	(1297 304 017)	1	2.VİTES DİŞLİSİ 38 DİŞ	GEAR 2nd 38 T		ADE		◆		◆
55	K20.00032	1297 304 196		2	1./ 2.VİT.SENKROMENÇ	ENGAGING RING			◆	◆	◆	◆
56	K20.00346	1296 304 135	(1246 304 278)	2	1./ 2. VİT.SENK.FRENLEME	SYNCHRONIZING CONE			◆	◆	◆	◆
57	K20.00071	1297 304 195		1	1./ 2.VİT.YILDIZ DİŞLİ	GUIDE SLEEVE			◆	◆	◆	◆
58	K20.00034	1257 304 020	(1250 304 160)	1	1./ 2.VİT.SENK. HALKA	ENGAGING SLEEVE			◆	◆	◆	◆
59		1297 206 109	(1297 206 075)	1	1./2.VİTES HİLALİ	GEAR SHIT FORK 1st/2nd						◆
59		1297 206 106	(1297 206 058)	1	1./2.VİTES HİLALİ	GEAR SHIT FORK 1st/2nd			◆	◆	◆	
60	K20.00409	1297 304 035		1	1.VİTES MAS.BİL.ÇANAĞI	BEARING RACE			◆	◆	◆	◆
61	K20.01319	0735 320 487		1	1.VİTES MASURA BİLYA	NEEDLE CAGE	82X90X68mm		◆	◆	◆	◆
62	K20.00410	1297 304 270	(1297 304 153)	1	1.VİTES DİŞİLİSİ 44 DİŞ	GEAR 1st 44 T		ABCDE	◆		◆	
62	K20.00411	1297 304 441	(1297 304 152)	1	1.VİTES DİŞİLİSİ 47 DİŞ	GEAR 1st 47 T		ADE		◆		◆
63	K20.00412	1297 304 154		1	GERİ VİTES YILDIZ DİŞLİ	GUIDE SLEEVE			◆	◆	◆	◆
64	K20.00413	1297 304 034		1	GERİ VİT.MAS.BİL.ÇANAĞI	BEARING RACE			◆	◆		
65	K20.01320	0735 320 486		1	GERİ VİTES MASURA BİLYA	NEEDLE CAGE	78X86X44mm		◆	◆	◆	◆
66	K20.00414	1297 304 149		1	GERİ VİTES DİŞLİSİ 39 DİŞ	REVERSE GEAR 39 T		ABCDE	◆		◆	
66	K20.00415	1297 304 148		1	GERİ VİTES DİŞLİSİ 38 DİŞ	REVERSE GEAR 38 T		ADE		◆		◆
67		1297 206 174	(1297 206 162)	1	GERİ VİTES HİLALİ	GEAR SHIT FORK/RG			◆	◆	◆	◆
68	K20.01526	1297 304 381	(1297 304 176)	1	GERİ VİTES DİŞLİ PULU	THRUST WASHER		ADE	◆	◆		
69	K20.00072	1297 304 187		1	GÜNEŞ DİŞLİ 27 DİŞ	SUN GEAR 27 T		ADE	◆	◆		
70	K20.01116	0750 118 135	(0750 118 006)	1	GÜNEŞ DİŞLİ BİLYASI	ROLLER BEARING	65X140X33mm	ACDE	◆	◆		
71	K20.00073	1297 304 439	(1297 304 192)	1	GÜNEŞ DİŞLİ 24 DİŞ	SUN GEAR 24 T		ABDE			◆	◆
72	K20.01117	0750 118 180		1	GÜNEŞ DİŞLİ BİLYASI	ROLLER BEARING	80X140X33mm	ABDE			◆	◆
73		1297 301 154	(1297 301 138)	1	ŞANZIMAN ORTA GÖVDE	HOUSING						◆

NOTES :

ABCDE alfabetic letters are used in conjunction with the encoded parts.

NOTLAR :

ABCDE alfabetik harfler ile kodlananparçalar birlikte kullanılır.

Original parts names, oem numbers, symbols and descriptions used in this catalogue are for reference purposes only.

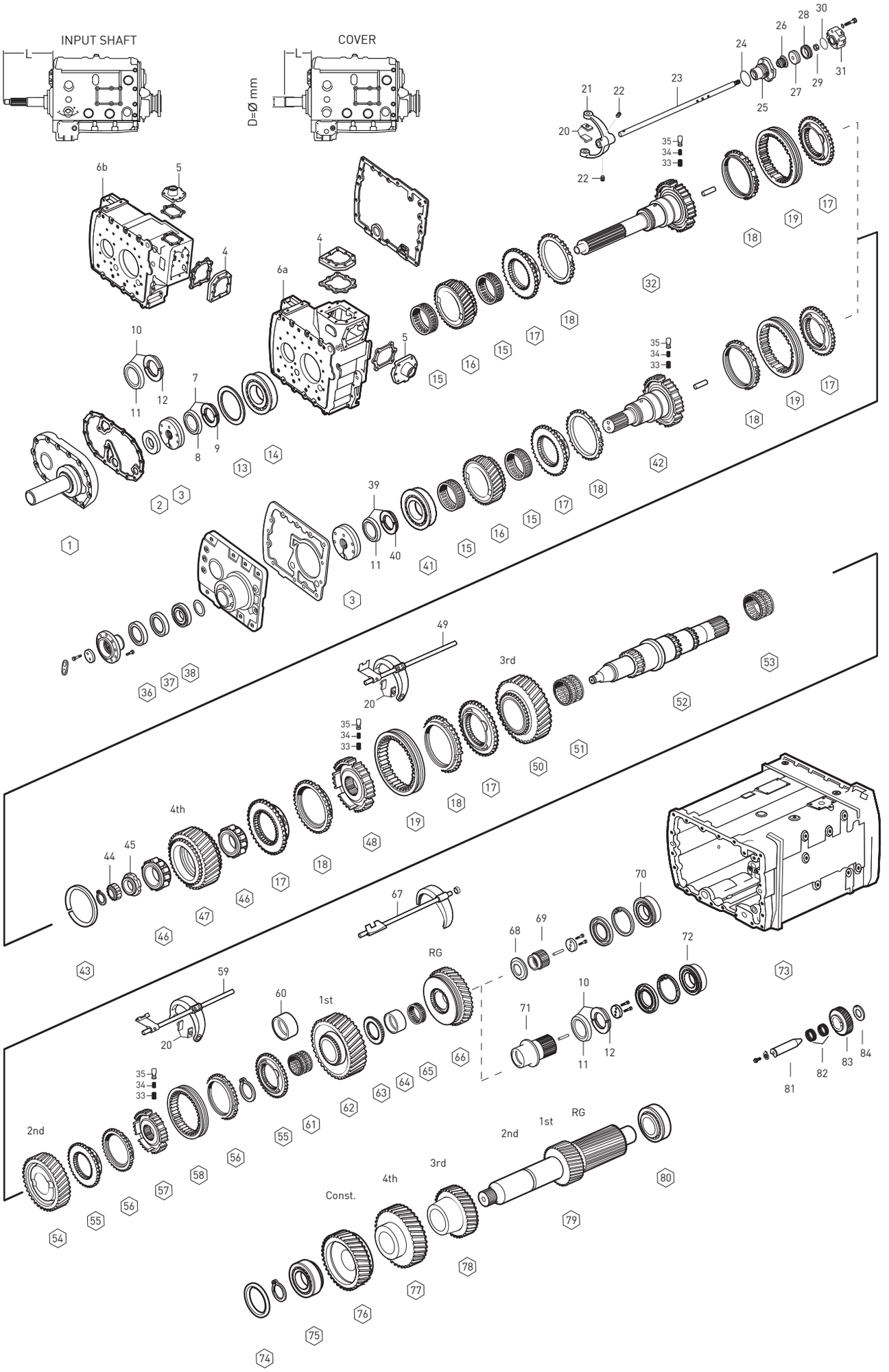

Original parts names, oem numbers, symbols and descriptions used in this catalogue are for reference purposes only.

Fig.	Kacmaz No.	Oem No	Oem Old No	Pcs.	Ürün Tanımı	Description	Sizes	Notes	SG 11.46-0.85	DG 13.68-1.00	SG 14.29-0.82	DG 17.06-1.00
73		1297 301 146	(1297 301 105)	1	ŞANZIMAN ORTA GÖVDE	HOUSING			◆	◆	◆	
			(1297 301 148)									
			(1297 301 106)									
74	K20.01648	0730 102 099		1	GRUP MİLİ ÖN BİLYA RAYNELİ	SHIM	3.00mm		◆	◆	◆	◆
74	K20.01649	0730 102 060		1	GRUP MİLİ ÖN BİLYA RAYNELİ	SHIM	2.60mm		◆	◆	◆	◆
74	K20.01650	0730 102 068		1	GRUP MİLİ ÖN BİLYA RAYNELİ	SHIM	2.20mm		◆	◆	◆	◆
74	K20.01651	0730 102 075		1	GRUP MİLİ ÖN BİLYA RAYNELİ	SHIM	1.85mm		◆	◆	◆	◆
74	K20.01652	2001652		1	GRUP MİLİ ÖN BİLYA RAYNELİ	SHIM	0.30mm		◆	◆	◆	◆
74	K20.01653	2001653		1	GRUP MİLİ ÖN BİLYA RAYNELİ	SHIM	0.20mm		◆	◆	◆	◆
74	K20.01654	2001654		1	GRUP MİLİ ÖN BİLYA RAYNELİ	SHIM	0.10mm		◆	◆	◆	◆
75	K20.01124	0750 117 010	(0750 117 030)	1	GRUP MİLİ ÖN BİLYA	ROLLER BEARING	50.8X100X35mm		◆	◆	◆	◆
76	K20.00052	1297 303 074	(1297 303 040)	1	OVARD.DİŞLİ KARŞ.31 DİŞ	CONSTANT GEAR 31 T		CDE	◆			
76	K20.00053	1297 303 066	(1297 303 039)	1	OVARD.DİŞLİ KARŞ.34 DİŞ	CONSTANT GEAR 34 T		AD		◆		
76	K20.00054	1297 303 098	(1297 303 051)	1	OVARD.DİŞLİ KARŞ.32 DİŞ	CONSTANT GEAR 32 T		ABDE			◆	
76	K20.00055	1297 303 086	(1297 303 043)	1	OVARD.DİŞLİ KARŞ.35 DİŞ	CONSTANT GEAR 35 T		DE				◆
77	K20.00059	1297 303 072	(1297 303 025)	1	4.VİTES DİŞLİ KARŞ.34 DİŞ	GEAR 4th 34 T		CDE	◆			
77	K20.00062	1297 303 065	(1297 303 026)	1	4.VİTES DİŞLİ KARŞ.31 DİŞ	GEAR 4th 31 T		AD		◆		
77	K20.00060	1297 303 097	(1297 303 050)	1	4.VİTES DİŞLİ KARŞ.35 DİŞ	GEAR 4th 35 T		ABDE			◆	
77	K20.00061	1297 303 123	(1297 303 041)	1	4.VİTES DİŞLİ KARŞ.32 DİŞ	GEAR 4th 32 T		DE				◆
78	K20.00056	1297 303 073	(1297 303 010)	1	3.VİTES DİŞLİ KARŞ.28 DİŞ	GEAR 3rd 28 T		ABCDE	◆		◆	
78	K20.00057	1297 303 067	(1297 303 009)	1	3.VİTES DİŞLİ KARŞ.25 DİŞ	GEAR 3rd 25 T		AD		◆		
78	K20.00058	1297 303 132	(1297 303 042)	1	3.VİTES DİŞLİ KARŞ.26 DİŞ	GEAR 3rd 26 T		DE				◆
79	K20.00416	1297 303 075	(1297 303 054)	1	GRUP MİLİ 19-23 DİŞ	COUNTER SHAFT 19-23 T		ABCDE	◆		◆	
79	K20.00076	1297 303 140	(1297 303 064)	1	GRUP MİLİ 17-20 DİŞ	COUNTER SHAFT 17-20 T		ADE		◆		◆
80	K20.01126	0750 117 009		1	GRUP MİLİ ARKA BİLYA	ROLLER BEARING	49.2X103.1X43.6mm		◆	◆	◆	◆
81	K20.00598	1295 305 056	(1295 305 008)	1	KÜÇÜK GERİ VİTES PİMİ	PIN			◆	◆	◆	◆
			(1295 305 057)									
82	K20.01335	0750 115 011	(0735 320 042)	2	KÜÇÜK GERİ VİT.MAS.BİLYA	NEEDLE CAGE	40.0X60.0X26.0mm		◆	◆	◆	◆
83	K20.00600	1295 305 052		1	KÜÇÜK GERİ VİTES	REV.IDLER GEAR				◆		◆
83	K20.00601	1295 305 051		1	KÜÇÜK GERİ VİTES	REV.IDLER GEAR			◆		◆	
84	K20.01655	0730 150 064		1	KÜÇÜK GERİ VİTES PULU	THRUST WASHER			◆	◆	◆	◆

NOTES :

ABCDE alfabetic letters are used in conjunction with the encoded parts.

NOTLAR :

ABCDE alfabetik harfler ile kodlananparçalar birlikte kullanılır.

Original parts names, oem numbers, symbols and descriptions used in this catalogue are for reference purposes only.

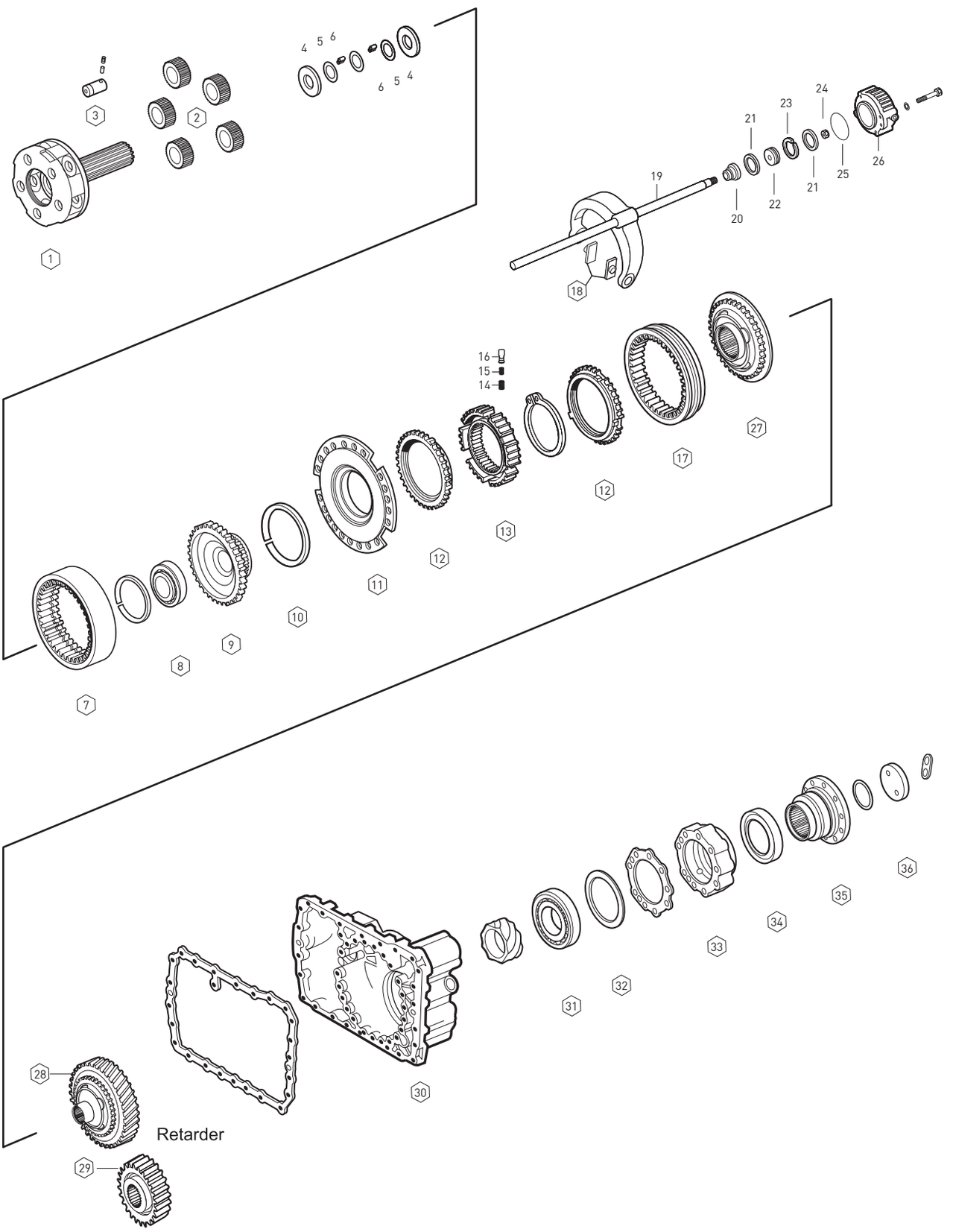

Original parts names, oem numbers, symbols and descriptions used in this catalogue are for reference purposes only.

Fig.	Kacmaz No.	Oem No	Oem Old No	Pcs.	Ürün Tanımı	Description	Sizes	Notes	SG 11.46-0.85	DG 13.68-1.00	SG 14.29-0.82	DG 17.06-1.00
1	K20.00613	1297 232 039	(1297 232 027)	1	ŞANZIMAN HEYKELİ	PLANETARY CARRIER		A	◆	◆		
1	K20.00603	1297 232 045	(1297 232 026)	1	ŞANZIMAN HEYKELİ	PLANETARY CARRIER		B			◆	◆
2	K20.00118	1297 232 023	(1297 332 022)	5	HEYKEL KOZA DİŞLİ TAKIMI	PLANETARY GEAR SET		A	◆	◆		
2	K20.00417	1297 232 024	(1297 332 028)	5	HEYKEL KOZA DİŞLİ TAKIMI	PLANETARY GEAR SET		B			◆	◆
3	K20.00418	1297 332 109	(1297 332 005)	5	HEYKEL KOZA DİŞLİ PİMİ	PLANET SHAFT			◆	◆	◆	◆
4	K20.01511	0501 306 212		10	HEYKEL KOZA DİŞLİ PULU	THRUST WASHER			◆	◆	◆	◆
5	K20.01512	0730 103 846		15	HEYKEL KOZA DİŞLİ PULU	THRUST WASHER			◆	◆	◆	◆
6	K20.01453	0750 119 143	(0750 119 109)	120	HEYKEL KOZA DİŞ.TANE BİLYA	NEEDLE ROLLER	10X16.8mm		◆	◆	◆	◆
7	K20.00614	1297 332 080	(1297 332 036)	1	ÇEMBER DİŞLİ	RING WHEEL		A	◆	◆		
7	K20.00605	1295 332 086		1	ÇEMBER DİŞLİ 86 DİŞ	RING WHEEL 86 T		B			◆	◆
8	K20.01133	0750 116 165	(0635 338 049)	1	PLANET ÇAN DİŞLİ BİLYASI	ROLLER BEARING	80X110X16mm		◆	◆	◆	◆
9	K20.00615	1297 332 017		1	PLANET ÇAN DİŞLİ	CARRIER HUB		A	◆	◆		
9	K20.00607	1297 332 035		1	PLANET ÇAN DİŞLİ 86 DİŞ	CARRIER HUB 86 T		B			◆	◆
10	K20.01656	0730 505 056	(0730 505 055)	1	ÇEMBER DİŞLİ SEGMANI	SPRING RING	3.20mm		◆	◆	◆	◆
11	K20.00007	1296 233 006		1	TEPSİ SENKROMENÇ	FLANGE			◆	◆	◆	◆
12	K20.00038	1296 333 045	(1296 333 022)	2	AĞIR SERİ SENK.FRENLEME	SYNCHRONIZING CONE			◆	◆	◆	◆
13	K20.00363	1296 333 002		1	AĞIR SERİ YILDIZ DİŞLİ	GUIDE SLEEVE			◆	◆	◆	◆
14	K20.00469	0732 040 385		9	AĞIR SERİ YILDIZ DİŞLİ YAYI	SPRING			◆	◆	◆	◆
15	K20.00470	0732 040 386		9	AĞIR SERİ YILDIZ DİŞLİ YAYI	SPRING			◆	◆	◆	◆
16	K20.00471	1240 304 278		9	AĞIR SERİ YILDIZ DİŞLİ FİŞEĞİ	PRESSURE PIECE			◆	◆	◆	◆
17	K20.00039	1296 333 023	(0769 186 286)	1	AĞIR SERİ SENK. HALKA	ENGAGING SLEEVE			◆	◆	◆	◆
18	K20.00341	1296 334 004		2	AĞIR SERİ HİLAL PABUCU	SLIDING PAD			◆	◆	◆	◆
19		1312 234 002		1	AĞIR SERİ HİLALİ	GEAR SHIFT FORK			◆	◆	◆	◆
20	K20.01016	0750 112 034		1	AĞIR SERİ HİLAL MİL KEÇESİ	FLANGE PACKING	25.0X38.0X14.2mm		◆	◆	◆	◆
21	K20.01024	0734 317 150	(0750 112 019)	2	AĞIR SERİ HAVA KEÇESİ	SEALING RING	80.0X90.0X4.8mm		◆	◆	◆	◆
22		1296 334 039		1	AĞIR SERİ HİLAL MİL PİSTONU	PISTON			◆	◆	◆	◆
23	K20.01657	0750 112 066		1	AĞIR SERİ HİLAL MİL FİBERİ	GUIDE RING			◆	◆	◆	◆
24	K20.01774	0737 006 095		1	AĞIR SERİ HİLAL MİL SOMUNU	NUT	M16X1.5mm		◆	◆	◆	◆
25		0634 314 019		1	AĞIR SERİ SİLİNDİR ORİNGİ	O-RING	94.0X3.0mm		◆	◆	◆	◆
26	K20.00845	1295 334 075		1	AĞIR SERİ SİLİNDİR GÖVDESİ	CYLINDER			◆	◆	◆	◆
27	K20.00006	1313 233 001	(1297 233 018)	1	SERİ SENKROMENÇ	ENGAGING RING	38spl.		◆	◆	◆	◆
28	K20.00386	1297 333 118		1	AĞIR SERİ SENKROMENÇ	ENGAGING RING	Retarder				◆	
29	K20.00609	1297 313 231		1	RETARDER DİŞLİSİ	GEAR	Retarder				◆	
30		1296 301 129		1	ŞANZIMAN ARKA GÖVDE	HOUSING				◆	◆	
30		1296 301 133		1	ŞANZIMAN ARKA GÖVDE	HOUSING			◆	◆	◆	◆
30		1296 301 180		1	ŞANZIMAN ARKA GÖVDE	HOUSING			◆	◆		
31	K20.01134	0750 116 002	(0750 116 002)	1	ŞANZIMAN KUTU BİLYASI	ROLLER BEARING	90X160X30mm		◆	◆	◆	◆
32	K20.01658	0730 100 115		1	ŞANZ.ARKA BİLYA RAYNELİ	SHIM	0.30mm		◆	◆	◆	◆
32	K20.01659	0730 100 116		1	ŞANZ.ARKA BİLYA RAYNELİ	SHIM	0.20mm		◆	◆	◆	◆
32	K20.01660	2001660		1	ŞANZ.ARKA BİLYA RAYNELİ	SHIM	0.10mm		◆	◆	◆	◆
33		1295 231 001		1	ŞANZ.ARKA BİLYA KAPAĞI	BEARING COVER			◆	◆	◆	◆

NOTES :

A : Alphabetical letters used in conjunction with these products are classified.

B : Alphabetical letters used in conjunction with these products are classified.

NOTLAR :

A : Alfabetik harf ile sınıflandırılan ürünler, birlikte kullanılır.

B : Alfabetik harf ile sınıflandırılan ürünler, birlikte kullanılır.

Original parts names, oem numbers, symbols and descriptions used in this catalogue are for reference purposes only.

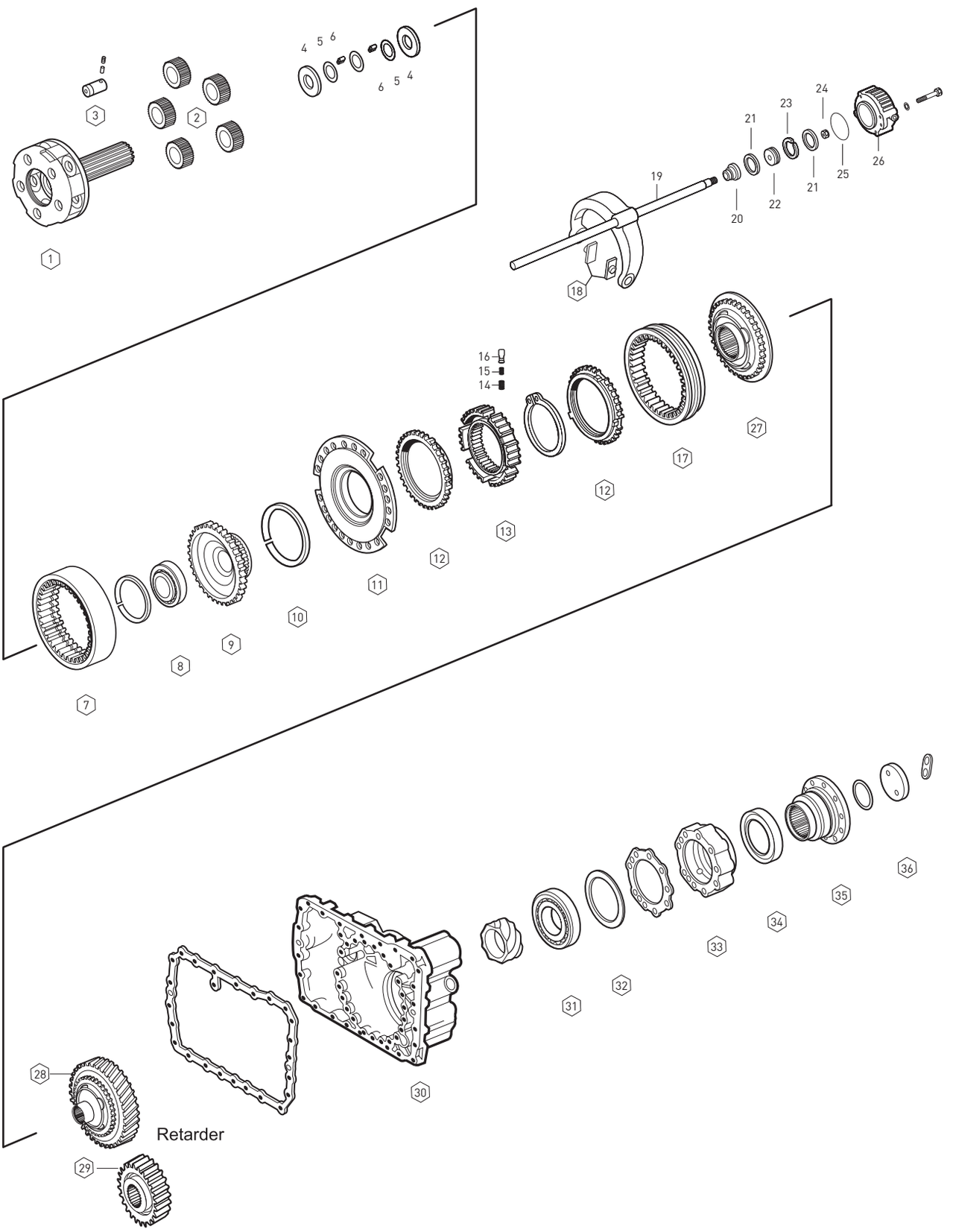

Original parts names, oem numbers, symbols and descriptions used in this catalogue are for reference purposes only.

Fig.	Kacmaz No.	Oem No	Oem Old No	Pcs.	Ürün Tanımı	Description	Sizes	Notes	SG 11.46-0.85	DG 13.68-1.00	SG 14.29-0.82	DG 17.06-1.00
34	K20.01013	0750 111 341		1	ŞANZ.ARKA KAPAK KEÇESİ	OIL SEAL	105.0X130.0X12mm		◆	◆	◆	◆
35	K20.00370	1297 338 041		1	ŞANZIMAN FLANŞI	COMPANION FLANGE	4-H,Ø180mm		◆	◆	◆	◆
35	K20.00371	1297 338 010		1	ŞANZIMAN FLANŞI	COMPANION FLANGE	10-H,Ø180mm		◆	◆	◆	◆
35	K20.00429	1297 338 038		1	ŞANZIMAN FLANŞI	COMPANION FLANGE	10-H,Ø180mm		◆	◆	◆	◆
36	K20.01661	1295 332 051		1	ŞANZIMAN FLANŞ PULU	WASHER			◆	◆	◆	◆

NOTES :

A : Alphabetical letters used in conjunction with these products are classified.

B : Alphabetical letters used in conjunction with these products are classified.

NOTLAR :

A : Alfabetik harf ile sınıflandırılan ürünler, birlikte kullanılır.

B : Alfabetik harf ile sınıflandırılan ürünler, birlikte kullanılır.

SYNCHRONIZER KIT INPUT SHAFT

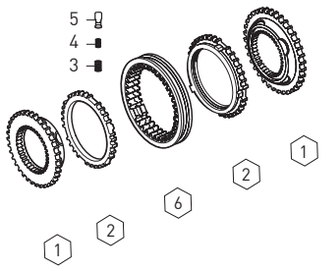

Fig.	Kacmaz No.	Oem No	Oem Old No	Pcs.	Ürün Tanımı	Description
	K20.00486	1295 298 936		Kit	TAKVİYE SENKROMENÇ KİT	SYNCHRONIZER KIT Const
1	K20.00019	1295 304 278		2	TAKVİYE SENKROMENÇ	ENGAGING RING
2	K20.00021	1304 304 686	(1295 304 004)	2	TAKVİYE SENK.FRENLEME	SYNCHRONIZING CONE
3	K20.00469	0732 040 385		3	TAKVİYE YILDIZ DİŞLİ YAYI	SPRING
4	K20.00470	0732 040 386		3	TAKVİYE YILDIZ DİŞLİ YAYI	SPRING
5	K20.00471	1240 304 278		3	TAK.YILDIZ DİŞLİ FİŞEĞİ	PRESSURE PIECE
6	K20.00020	1295 304 002		1	TAKVİYE SENK.HALKA	ENGAGING SLEEVE

SYNCHRONIZER KIT 3rd/4th

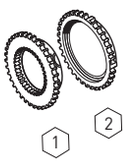

Fig.	Kacmaz No.	Oem No	Oem Old No	Pcs.	Ürün Tanımı	Description
	K20.00487	1297 204 062		Kit	PRİZ.SENKROMENÇ KİT	SYNCH.KIT 3rd/4th
1	K20.00019	1295 304 278		1	PRİZ.SENKROMENÇ	ENGAGING RING
2	K20.00021	1304 304 686	(1295 304 004)	1	PRİZ.SENK.FRENLEME	SYNCHRONIZING CONE

SYNCHRONIZER KIT 3rd/4th

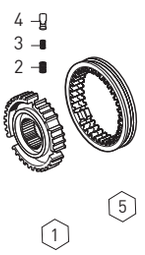

Fig.	Kacmaz No.	Oem No	Oem Old No	Pcs.	Ürün Tanımı	Description
	K20.00488	1297 204 030		Kit	3./4.VİT.HALKA YILDIZ KİTİ	SYNCH.KIT 3rd/4th
1	K20.00025	1297 304 031		1	3./4.VİT.YILDIZ DİŞLİ	GUIDE SLEEVE
2	K20.00469	0732 040 385		3	3./4.VİT.YILDIZ DİŞLİ YAYI	SPRING
3	K20.00470	0732 040 386		3	3./4.VİT.YILDIZ DİŞLİ YAYI	SPRING
4	K20.00471	1240 304 278		3	3./4.VİT.YILDIZ DİŞLİ FİŞEĞİ	PRESSURE PIECE
5	K20.00020	1295 304 002		1	3./4.VİT.SENK.HALKA	ENGAGING SLEEVE

SYNCHRONIZER KIT 3rd/4th

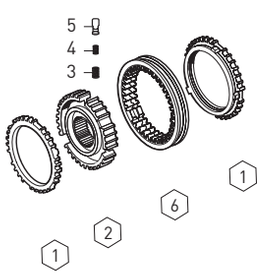

Fig.	Kacmaz No.	Oem No	Oem Old No	Pcs.	Ürün Tanımı	Description
	K20.00489	1297 204 059		Kit	3./4.VİT.SENKROMENÇ KİT	SYNCH.KIT 3rd/4th
1	K20.00021	1304 304 686	(1295 304 004)	2	3./4.VİT.FRENLEME	SYNCH.CONE
2	K20.00025	1297 304 031		1	3./4.VİT.YILDIZ DİŞLİ	GUIDE SLEEVE
3	K20.00469	0732 040 385		3	3./4.VİT.YILDIZ DİŞLİ YAYI	SPRING
4	K20.00470	0732 040 386		3	3./4.VİT.YILDIZ DİŞLİ YAYI	SPRING
5	K20.00471	1240 304 278		3	3./4.VİT.YILDIZ DİŞLİ FİŞEĞİ	PRESSURE PIECE
6	K20.00020	1295 304 002		1	3./4.VİT.SENK.HALKA	ENGAGING SLEEVE

SYNCHRONIZER KIT 3rd/4th

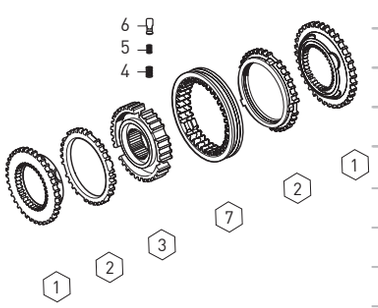

Fig.	Kacmaz No.	Oem No	Oem Old No	Pcs.	Ürün Tanımı	Description
	K20.00490	1297 298 958		Kit	3./4.VİT.SENKROMENÇ KİT	SYNCH.KIT 3rd/4th
1	K20.00019	1295 304 278		2	3./4.VİT.SENKROMENÇ	ENGAGING RING
2	K20.00021	1304 304 686	(1295 304 004)	2	3./4.VİT.FRENLEME	SYNCH.CONE
3	K20.00025	1297 304 031		1	3./4.VİT.YILDIZ DİŞLİ	GUIDE SLEEVE
4	K20.00469	0732 040 385		3	3./4.VİT.YILDIZ DİŞLİ YAYI	SPRING
5	K20.00470	0732 040 386		3	3./4.VİT.YILDIZ DİŞLİ YAYI	SPRING
6	K20.00471	1240 304 278		3	3./4.VİT.YILDIZ DİŞLİ FİŞEĞİ	PRESSURE PIECE
7	K20.00020	1295 304 002		1	3./4.VİT.SENK.HALKA	ENGAGING SLEEVE

Original parts names, oem numbers, symbols and descriptions used in this catalogue are for reference purposes only.

Fig.	Kacmaz No.	Oem No	Oem Old No	Pcs.	Ürün Tanımı	Description
	K20.00491	1297 204 072		Kit	1./2.VİT.SENKROMENÇ KİT	SYNCH.KIT 1st/2nd
1	K20.00032	1297 304 196		1	1./2.VİT.SENKROMENÇ	ENGAGING RING
2	K20.00346	1296 304 135	(1246 304 278)	1	1./2.VİT.SENK.FRENLEME	SYNCHRONIZING CONE

SYNCHRONIZER KIT 1st/2nd

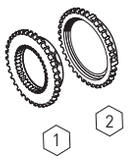

Fig.	Kacmaz No.	Oem No	Oem Old No	Pcs.	Ürün Tanımı	Description
	K20.00492	1297 204 031		Kit	1./2.VİT.HALKA YILDIZ KİTİ	SYNCH.KIT 1st/2nd
1	K20.00071	1297 304 195		1	1./2.VİT.YILDIZ DİŞLİ	GUIDE SLEEVE
2	K20.00469	0732 040 385		3	1./2.VİT.YILDIZ DİŞLİ YAYI	SPRING
3	K20.00470	0732 040 386		3	1./2.VİT.YILDIZ DİŞLİ YAYI	SPRING
4	K20.00471	1240 304 278		3	1./2.VİT.YILDIZ DİŞLİ FİŞEĞİ	PRESSURE PIECE
5	K20.00034	1257 304 020	(1250 304 160)	1	1./2.VİT.SENK.HALKA	ENGAGING SLEEVE

SYNCHRONIZER KIT 1st/2nd

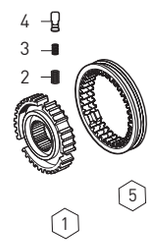

Fig.	Kacmaz No.	Oem No	Oem Old No	Pcs.	Ürün Tanımı	Description
	K20.00493	1297 204 019		Kit	1./2.VİT.SENKROMENÇ KİT	SYNCH.KIT 1st/2nd
1	K20.00346	1296 304 135	(1246 304 278)	2	1./2.VİT.FRENLEME	SYNCH.CONE
2	K20.00071	1297 304 195		1	1./2.VİT.YILDIZ DİŞLİ	GUIDE SLEEVE
3	K20.00469	0732 040 385		3	1./2.VİT.YILDIZ DİŞLİ YAYI	SPRING
4	K20.00470	0732 040 386		3	1./2.VİT.YILDIZ DİŞLİ YAYI	SPRING
5	K20.00471	1240 304 278		3	1./2.VİT.YILDIZ DİŞLİ FİŞEĞİ	PRESSURE PIECE
6	K20.00034	1257 304 020	(1250 304 160)	1	1./2.VİT.SENK.HALKA	ENGAGING SLEEVE

SYNCHRONIZER KIT 1st/2nd

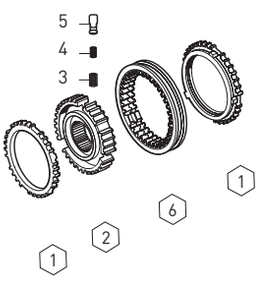

Fig.	Kacmaz No.	Oem No	Oem Old No	Pcs.	Ürün Tanımı	Description
	K20.00494	1297 298 956		Kit	1./2.VİT.SENKROMENÇ KİT	SYNCH.KIT 1st/2nd
1	K20.00032	1297 304 196		2	1./2.VİT.SENKROMENÇ	ENGAGING RING
2	K20.00346	1296 304 135	(1246 304 278)	2	1./2.VİT.FRENLEME	SYNCH.CONE
3	K20.00071	1297 304 195		1	1./2.VİT.YILDIZ DİŞLİ	GUIDE SLEEVE
4	K20.00469	0732 040 385		3	1./2.VİT.YILDIZ DİŞLİ YAYI	SPRING
5	K20.00470	0732 040 386		3	1./2.VİT.YILDIZ DİŞLİ YAYI	SPRING
6	K20.00471	1240 304 278		3	1./2.VİT.YILDIZ DİŞLİ FİŞEĞİ	PRESSURE PIECE
7	K20.00034	1257 304 020	(1250 304 160)	1	1./2.VİT.SENK.HALKA	ENGAGING SLEEVE

SYNCHRONIZER KIT 1st/2nd

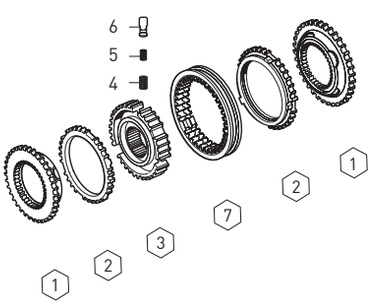

Fig.	Kacmaz No.	Oem No	Oem Old No	Pcs.	Ürün Tanımı	Description
	K20.00511	1297 298 912		Kit	AĞIR SERİ DİŞLİ TAKIMI	PLANETARY GEAR KIT
1	K20.00118	1297 232 023	(1297 332 022)	5	HEYKEL KOZA DİŞLİSİ	PLANETARY GEAR
2	K20.00418	1297 332 109	(1297 332 005)	5	HEYKEL KOZA DİŞLİ PİMİ	PLANETARY SHAFT
3	K20.01511	0501 306 212		10	HEYKEL KOZA DİŞLİ PULU	THRUST WASHER
4	K20.01512	0730 103 846		15	HEYKEL KOZA DİŞLİ PULU	THRUST WASHER
5	K20.01453	0750 119 109		120	HEYKEL KOZA DİŞ.BİLYASI	NEEDLE ROLLER (10X16.8)

PLANETARY GEAR KIT

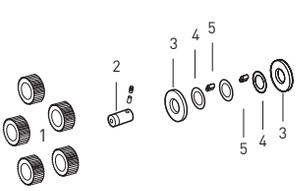

Original parts names, oem numbers, symbols and descriptions used in this catalogue are for reference purposes only.

PLANETARY GEAR KIT

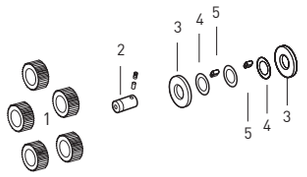

Fig.	Kacmaz No.	Oem No	Oem Old No	Pcs.	Ürün Tanımı	Description
	K20.00512	1297 298 919		Kit	AĞIR SERİ DİŞLİ TAKIMI	PLANETARY GEAR KIT
1	K20.00417	1297 232 024	(1297 332 028)	5	HEYKEL KOZA DİŞLİSİ	PLANETARY GEAR
2	K20.00418	1297 332 109	(1297 332 005)	5	HEYKEL KOZA DİŞLİ PİMİ	PLANETARY SHAFT
3	K20.01511	0501 306 212		10	HEYKEL KOZA DİŞLİ PULU	THRUST WASHER
4	K20.01512	0730 103 846		15	HEYKEL KOZA DİŞLİ PULU	THRUST WASHER
5	K20.01453	0750 119 109		120	HEYKEL KOZA DİŞ.BİLYASI	NEEDLE ROLLER (10X16.8)

SYNCHRONIZER KIT PLANETARY

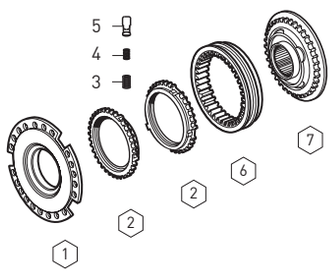

Fig.	Kacmaz No.	Oem No	Oem Old No	Pcs.	Ürün Tanımı	Description
	K20.00498	1295 298 939		Kit	AĞIR SERİ SENK.KİT	SYNCHRONIZER KIT
1	K20.00007	1296 233 006		1	TEPSİ SENKROMENÇ	FLANGE
2	K20.00038	1296 333 045	(1296 333 022)	2	AĞIR SERİ FRENLEME	SYNCHRONIZING CONE
3	K20.00469	0732 040 385		9	AĞIR SERİ YILDIZ DİŞLİ YAYI	SPRING
4	K20.00470	0732 040 386		9	AĞIR SERİ YILDIZ DİŞLİ YAYI	SPRING
5	K20.00471	1240 304 278		9	AĞIR SERİ YILDIZ DİŞ.FİŞEĞİ	PRESSURE PIECE
6	K20.00039	1296 333 023		1	AĞIR SERİ SENK.HALKA	ENGAGING SLEEVE
7	K20.00006	1313 233 001	(1297 233 018)	1	SERİ SENKROMENÇ	ENGAGING RING

SYNCHRONIZER KIT PLANETARY

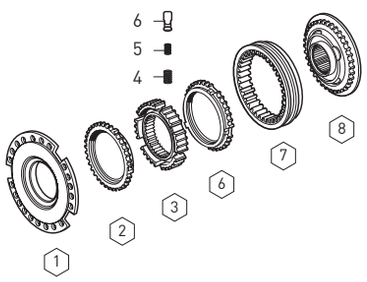

Fig.	Kacmaz No.	Oem No	Oem Old No	Pcs.	Ürün Tanımı	Description
	K20.00500	1295 298 950		Kit	AĞIR SERİ SENK.KİT	SYNCHRONIZER KIT
1	K20.00007	1296 233 006		1	TEPSİ SENKROMENÇ	FLANGE
2	K20.00038	1296 333 045	(1296 333 022)	2	AĞIR SERİ FRENLEME	SYNCHRONIZING CONE
3	K20.00363	1296 333 002		1	AĞIR SERİ YILDIZ DİŞLİ	GUIDE SLEEVE
4	K20.00469	0732 040 385		9	AĞIR SERİ YILDIZ DİŞLİ YAYI	SPRING
5	K20.00470	0732 040 386		9	AĞIR SERİ YILDIZ DİŞLİ YAYI	SPRING
6	K20.00471	1240 304 278		9	AĞIR SERİ YILDIZ DİŞ.FİŞEĞİ	PRESSURE PIECE
7	K20.00039	1296 333 023		1	AĞIR SERİ SENK.HALKA	ENGAGING SLEEVE
8	K20.00006	1313 233 001	(1297 233 018)	1	SERİ SENKROMENÇ	ENGAGING RING

GEARBOX GASKET KIT

Fig.	Kacmaz No.	Oem No	Oem Old No	Pcs.	Ürün Tanımı	Description
1	K20.01584	1295 298 915		Kit	ŞANZIMAN CONTA TAKIMI	GASKET KIT
2		1313 301 038		1	ŞANZ.ÖN GÖVDE CONTASI	GASKET
3		1313 302 014		1	PRİZ.KEÇE KAPAK CONTASI	GASKET
4		1313 306 012		1	ŞANZ.HİLALİ KAPAK CONTASI	GASKET
5		1313 307 002		1	ŞANZ.ÖN GÖVDE ARKA CONTA	GASKET
5		1313 307 020		2	ŞANZ.KULE KAPAK CONTASI	GASKET
5		1313 307 003		1	ŞANZ.KULE KAPAK CONTASI	GASKET
5		1313 307 004		1	ŞANZ.KULE ALT KAPAK CONTASI	GASKET
5		1313 307 022		1	ŞANZ.KULE ÜST KAPAK CONTASI	GASKET
6		1313 301 037		1	ŞANZ.ARKA GÖVDE CONTASI	GASKET
7		1313 301 036		1	ŞANZ.BİLYA KAPAK CONTASI	GASKET
8	K20.02108	1238 308 201		1	PTO BAĞLANTI KAPAK CONTASI	GASKET
9		1313 307 005		1	ŞANZ.İSTİNAT KAPAK CONTASI	GASKET
10		1313 307 006		1	ŞANZ.İSTİNAT KAPAK CONTASI	GASKET

Original parts names, oem numbers, symbols and descriptions used in this catalogue are for reference purposes only.

Fig.	Kacmaz No.	Oem No	Oem Old No	Pcs.	Ürün Tanımı	Description
1		1296 313 131		1	P.KİLİT EMNİYET SACI	RETAINING RING
2		0730 104 627		1	PARÇALI KİLİT	SPLIT RING
3		1296 313 238		1	PTO MİL KOVANI	SLIDING SLEEVE
4		0730 104 628		1	PTO DİŞLİ AYAR PULU	THRUST WASHER
5		1296 313 082		1	PTO DİŞLİ	GEAR 33 T
5		1296 313 083		1	PTO DİŞLİ	GEAR 36 T
5		1296 313 084		1	PTO DİŞLİ	GEAR 38 T
5		1296 313 085		1	PTO DİŞLİ	GEAR 39 T
5		1296 313 086		1	PTO DİŞLİ	GEAR 46 T
6	K20.00556	1296 213 028		1	PTO MİLİ DÜZ	INTERM.SHAFT
7	K20.00555	1296 213 028		1	PTO MİLİ FREZELİ	INTERM.SHAFT (Milled)
8		1296 313 125		1	PTO MİL SOMUNU	NUT
9		0735 410 139		1	PTO MİL BİLYASI	ROLLER BEARING
10		7429 032 102		1	PTO BİLYA KAPAK PULU	THRUST WASHER
11		1232 304 062		1	PTO BİLYA KAPAK RAYNELİ	SHIM (1.00mm)
11		1232 304 063		1	PTO BİLYA KAPAK RAYNELİ	SHIM (0.90mm)
11		1232 304 072		1	PTO BİLYA KAPAK RAYNELİ	SHIM (0.70mm)
12		1250 313 190		1	PTO BAĞLANTI KAPAĞI	COVER
13	K20.01013	0750 111 341		1	ŞANZ.ARKA KAPAK KEÇESİ	OIL SEAL

P.T.O. (POWER TAKE OFF)

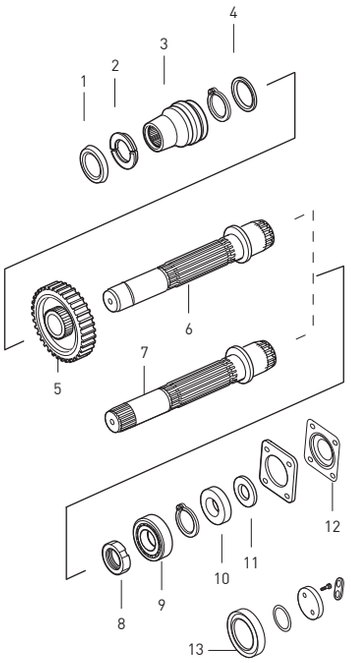

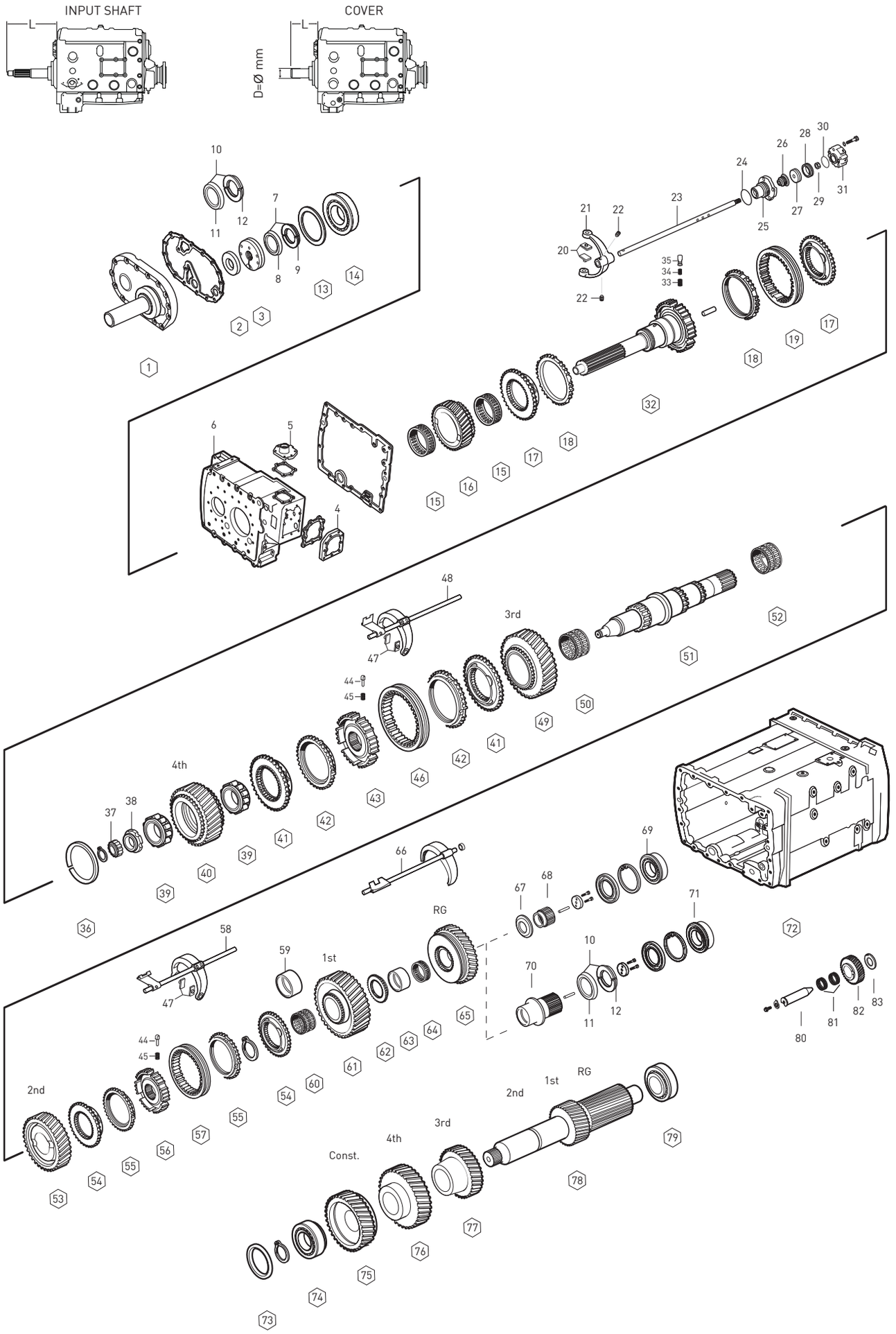

Original parts names, oem numbers, symbols and descriptions used in this catalogue are for reference purposes only.

Fig.	Kacmaz No.	Oem No	Oem Old No	Pcs.	Ürün Tanımı	Description	Sizes	Notes	DG 13.68-1.00	DG 17.06-1.00
1	K20.00616	1297 302 043		1	PRİZDİREK KEÇE KAPAĞI	COVER	L=170 D=62.6	A	◆	◆
1	K20.00617	1297 302 025		1	PRİZDİREK KEÇE KAPAĞI	COVER	L=205 D=68	B		◆
1	K20.00618	1297 302 082		1	PRİZDİREK KEÇE KAPAĞI	COVER	L=190 D=66	C		◆
2	K20.01003	0734 310 387	(0734 310 386)	1	PRİZDİREK KEÇESİ	OIL SEAL	55X75X8mm	ABC (1)	◆	◆
2	K20.01004	0634 310 733		1	PRİZDİREK KEÇESİ	OIL SEAL	90X110X13mm	D (2)		◆
3	K20.00484	1295 202 041		1	YAĞ POMPASI	OIL PUMP			◆	◆
4	K20.00561	1295 307 479		1	ŞANZIMAN KULE KAPAĞI	COVER			◆	◆
5	K20.00597	1295 307 434		1	ŞANZIMAN KULE KAPAĞI	COVER			◆	◆
6		1296 301 205		1	ŞANZIMAN ÖN GÖVDE	HOUSING		AB	◆	◆
6		1296 301 206		1	ŞANZIMAN ÖN GÖVDE	HOUSING		C		◆
6		1296 301 227	(1296 301 228)	1	ŞANZIMAN ÖN GÖVDE	HOUSING		D		◆
7	K20.01541	1499 298 003		1	EMN.SACI VE P.KİLİT TK.	SPLIT RING KIT	4.00mm	(3)	◆	◆
7	K20.01543	1499 298 002		1	EMN.SACI VE P.KİLİT TK.	SPLIT RING KIT	3.90mm	(4)	◆	◆
7	K20.01545	1499 298 001		1	EMN.SACI VE P.KİLİT TK.	SPLIT RING KIT	3.80mm	(5)	◆	◆
8	K20.01547	0730 062 579		1	KİLİT SEGMAN EMN.SACI	RETAINING RING			◆	◆
9	K20.01542	0730 105 156		2	PARÇALI KİLİT	SPLIT RING	4.00mm		◆	◆
9	K20.01544	0730 105 155		2	PARÇALI KİLİT	SPLIT RING	3.90mm		◆	◆
9	K20.01546	0730 105 154		2	PARÇALI KİLİT	SPLIT RING	3.80mm		◆	◆
10	K20.01638	1499 298 090		1	EMN.SACI VE P.KİLİT TK.	SPLIT RING KIT	4.30mm	(6)	◆	◆
10	K20.01640	1499 298 114		1	EMN.SACI VE P.KİLİT TK.	SPLIT RING KIT	4.20mm	(7)	◆	◆
10	K20.01642	1499 298 100		1	EMN.SACI VE P.KİLİT TK.	SPLIT RING KIT	4.10mm	(8)	◆	◆
10	K20.01548	1499 298 098		2	EMN.SACI VE P.KİLİT TK.	SPLIT RING KIT	4.00mm	(9)	◆	◆
10	K20.01550	1499 298 096		2	EMN.SACI VE P.KİLİT TK.	SPLIT RING KIT	3.90mm	(10)	◆	◆
10	K20.01552	1499 298 094		2	EMN.SACI VE P.KİLİT TK.	SPLIT RING KIT	3.80mm	(11)	◆	◆
11	K20.01554	0730 061 816		2	PARÇALI KİLİT EMN.SACI	RETAINING RING			◆	◆
12	K20.01639	0730 103 244		2	PARÇALI KİLİT	SPLIT RING	4.30mm		◆	◆
12	K20.01641	0730 104 337		2	PARÇALI KİLİT	SPLIT RING	4.20mm		◆	◆
12	K20.01643	0730 103 941		2	PARÇALI KİLİT	SPLIT RING	4.10mm		◆	◆
12	K20.01549	0730 103 939		2	PARÇALI KİLİT	SPLIT RING	4.00mm		◆	◆
12	K20.01551	0730 103 937		2	PARÇALI KİLİT	SPLIT RING	3.90mm		◆	◆
12	K20.01553	0730 103 935		2	PARÇALI KİLİT	SPLIT RING	3.80mm		◆	◆
13	K20.01644	0730 102 504		1	PRİZ.ÖN BİLYA RAYNELİ	SHIM	0.60mm		◆	◆
13	K20.01645	2001645		1	PRİZ.ÖN BİLYA RAYNELİ	SHIM	0.30mm		◆	◆
13	K20.01646	2001646		1	PRİZ.ÖN BİLYA RAYNELİ	SHIM	0.20mm		◆	◆
13	K20.01647	2001647		1	PRİZ.ÖN BİLYA RAYNELİ	SHIM	0.10mm		◆	◆
14	K20.01102	0750 118 130	(0750 118 131)	1	PRİZDİREK ÖN BİLYA	ROLLER BEARING	80X150X27.5mm		◆	◆
15	K20.01317	0735 320 896		2	PRİZDİREK MASURA BİLYA	NEEDLE CAGE	88X96X29mm		◆	◆
16	K20.00049	1297 302 176	(1297 302 071)	1	TAKVİYE DİŞLİSİ 28 DİŞ	CONSTANT GEAR 28 T		A	◆	
16	K20.00051	1297 302 241	(1297 302 079)	1	TAKVİYE DİŞLİSİ 26 DİŞ	CONSTANT GEAR 26 T		ABCD		◆
17a	K20.00019	1295 304 278		2	TAKVİYE SENKROMENÇ	ENGAGING RING			◆	◆
17b	K20.00304	1297 304 041		2	TAKVİYE SENKROMENÇ	ENGAGING RING			◆	◆

NOTES :

ABCD alfabetic letters are used in conjunction with the encoded parts.
(1) With Input Shaft 1297 202 009 - 1297 202 003 - 1297 202 054
(2) With Input Shaft 1297 221 009
(3) This kit includes (1499 298 003) = 2pcs 0730 105 156 + 1pcs 0730 062 579
(4) This kit includes (1499 298 002) = 2pcs 0730 105 155 + 1pcs 0730 062 579
(5) This kit includes (1499 298 001) = 2pcs 0730 105 154 + 1pcs 0730 062 579
(6) This kit includes (1499 298 090) = 2pcs 0730 103 244 + 1pcs 0730 061 816
(7) This kit includes (1499 298 114) = 2pcs 0730 104 337 + 1pcs 0730 061 816
(8) This kit includes (1499 298 100) = 2pcs 0730 103 941 + 1pcs 0730 061 816
(9) This kit includes (1499 298 098) = 2pcs 0730 103 939 + 1pcs 0730 061 816
(10) This kit includes (1499 298 096) = 2pcs 0730 103 937 + 1pcs 0730 061 816
(11) This kit includes (1499 298 094) = 2pcs 0730 103 935 + 1pcs 0730 061 816

NOTLAR :

ABCD alfabetik harfler ile kodlanan parçalar birlikte kullanılır.
(1) 1297 202 009 - 1297 202 003 - 1297 202 054 Prizdireklerde kullanılır.
(2) 1297 221 009 Prizdirekde kullanılır.
(3) (1499 298 003) nolu kit bu parçalardan oluşur = 2pcs 0730 105 156 + 1pcs 0730 062 579
(4) (1499 298 002) nolu kit bu parçalardan oluşur = 2pcs 0730 105 155 + 1pcs 0730 062 579
(5) (1499 298 001) nolu kit bu parçalardan oluşur = 2pcs 0730 105 154 + 1pcs 0730 062 579
(6) (1499 298 090) nolu kit bu parçalardan oluşur = 2pcs 0730 103 244 + 1pcs 0730 061 816
(7) (1499 298 114) nolu kit bu parçalardan oluşur = 2pcs 0730 104 337 + 1pcs 0730 061 816
(8) (1499 298 100) nolu kit bu parçalardan oluşur = 2pcs 0730 103 941 + 1pcs 0730 061 816
(9) (1499 298 098) nolu kit bu parçalardan oluşur = 2pcs 0730 103 939 + 1pcs 0730 061 816
(10) (1499 298 096) nolu kit bu parçalardan oluşur = 2pcs 0730 103 937 + 1pcs 0730 061 816
(11) (1499 298 094) nolu kit bu parçalardan oluşur = 2pcs 0730 103 935 + 1pcs 0730 061 816

Original parts names, oem numbers, symbols and descriptions used in this catalogue are for reference purposes only.

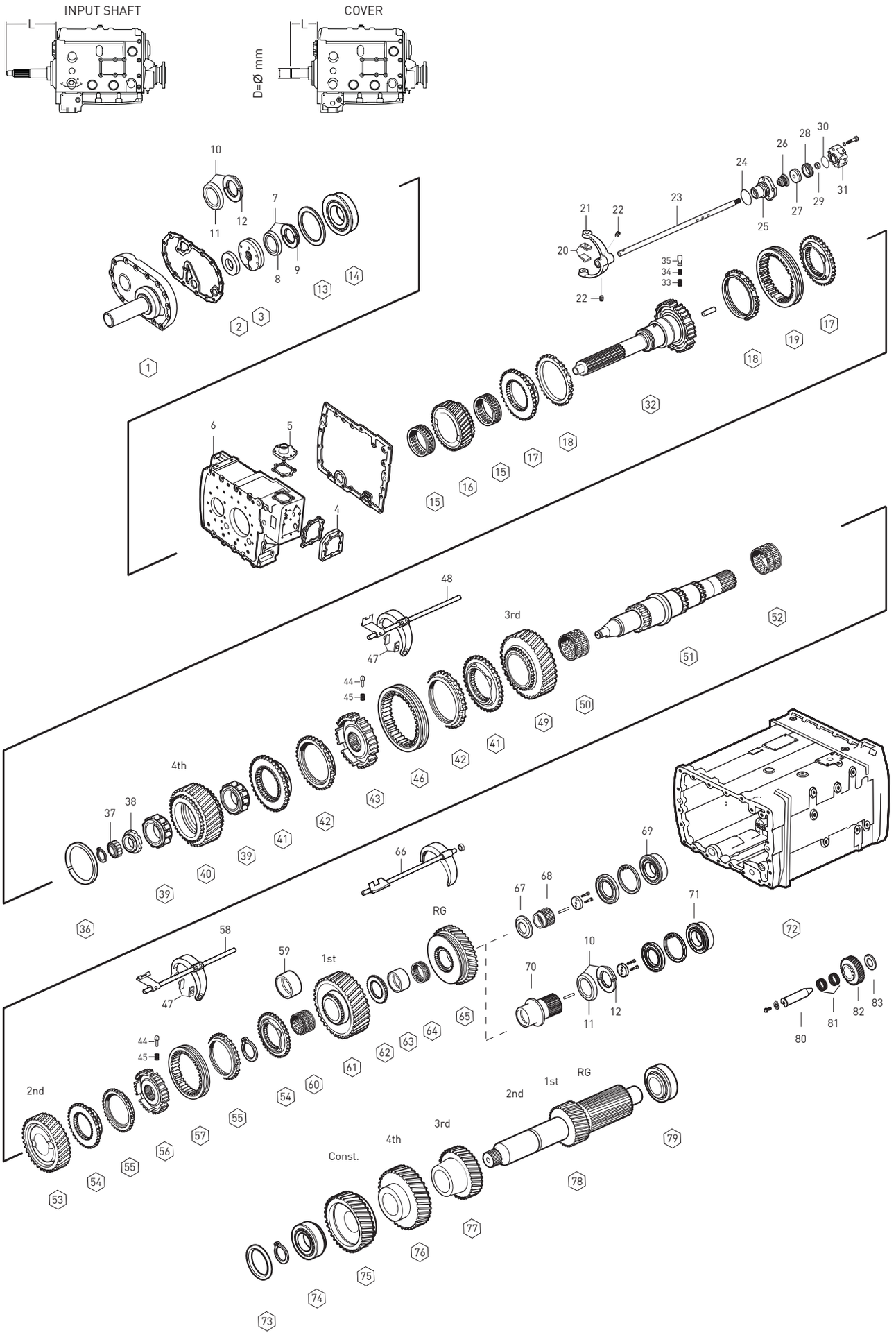

Original parts names, oem numbers, symbols and descriptions used in this catalogue are for reference purposes only.

Fig.	Kacmaz No.	Oem No	Oem Old No	Pcs.	Ürün Tanımı	Description	Sizes	Not	DG 13.68-1.00	DG 17.06-1.00
18	K20.00021	1304 304 686	(1295 304 004)	2	TAKVİYE FRENLEME	SYNCHRONIZING CONE			◆	◆
19	K20.00020	1295 304 002		1	TAKVİYE SENK.HALKA	ENGAGING SLEEVE			◆	◆
20	K20.00186	1295 306 132		2	TAKVİYE HİLAL PABUCU	SLIDING PAD			◆	◆
21		1313 312 002		1	TAKVİYE HİLALİ	G.SHIFT FORK			◆	◆
22	K20.01688	1315 312 047		2	TAKVİYE HİLAL VİDASI	SCREW	M12X1.0mm		◆	◆
23		1297 312 008		1	TAKVİYE HİLAL MİLİ	G.SHIFT RAIL			◆	◆
24		0634 313 671		1	TAKVİYE SİLİNDİR ORİNGİ	O-RING	80.0X3.0mm		◆	◆
25	K20.01738	1296 312 042	(1296 312 016)	1	TAKVİYE SİLİNDİR GÖVDESİ	CYLINDER			◆	◆
26	K20.01016	0750 112 034		1	TAKVİYE HİLAL MİL KEÇESİ	FLANGE PACKING	25.0X38.0X14.2mm		◆	◆
27		1296 312 053	(1296 312 047)	1	TAKVİYE HİLAL MİL PİSTONU	PISTON			◆	◆
28	K20.01021	0750 112 089		1	TAKVİYE HAVA KEÇESİ	DOUBLE PACKING	53.0X63.0X16.2mm		◆	◆
29	K20.01774	0737 006 095		1	TAKVİYE HİLAL MİL SOMUNU	NUT	M16X1.5mm		◆	◆
30		0634 314 018		1	TAKVİYE SİLİNDİR ORİNGİ	O-RING	59.0X2.0mm		◆	◆
31		0750 132 033		1	TAKVİYE VENTİLİ	5/2 WAY VALVE			◆	◆
32	K20.00514	1297 202 009	(1297 202 025)	1	PRİZDİREK	INPUT SHAFT	L=310 SAE 2	A	◆	◆
32	K20.00515	1297 202 003	(1297 202 023)	1	PRİZDİREK	INPUT SHAFT	L=324 SAE 2	B		◆
32	K20.00516	1297 202 054	(1297 202 043)	1	PRİZDİREK	INPUT SHAFT	L=315 SAE 2	C		◆
32	K20.00517	1297 221 009		1	PRİZDİREK	INPUT SHAFT	L=397.6 SAE 2	D		◆
33	K20.00469	0732 040 385		3	PRİZDİREK YAYI	SPRING			◆	◆
34	K20.00470	0732 040 386		3	PRİZDİREK YAYI	SPRING			◆	◆
35	K20.00471	1240 304 278		3	PRİZDİREK FİŞEĞİ	PRESSURE PIECE			◆	◆
36	K20.01518	0730 003 518		1	SENKROMENÇ AYAR SEKMANI	RING	6.30mm		◆	◆
36	K20.01519	0730 003 517		1	SENKROMENÇ AYAR SEKMANI	RING	6.00mm		◆	◆
36	K20.01520	0730 003 161		1	SENKROMENÇ AYAR SEKMANI	RING	5.10mm		◆	◆
36	K20.01521	0730 003 159		1	SENKROMENÇ AYAR SEKMANI	RING	4.50mm		◆	◆
36	K20.01522	0730 004 237		1	SENKROMENÇ AYAR SEKMANI	RING	4.00mm		◆	◆
37	K20.01108	0750 118 038		1	KAMALI MİL UÇ BİLYA	ROLLER BEARING	35X68X27.5mm		◆	◆
38	K20.00485	0737 502 092		1	KAMALI MİL SOMUNU	NUT	M60X1.5mm		◆	◆
39	K20.01111	0750 118 220	(0735 455 248)	2	4.VİTES DİŞLİ BİLYASI	ROLLER BEARING	63X97.5X37.5mm		◆	◆
40	K20.00064	1297 304 260	(1297 304 026)	1	4.VİTES DİŞLİSİ 30 DİŞ	GEAR 4th 30 T		A	◆	
40	K20.00066	1297 304 413	(1297 304 285)	1	4.VİTES DİŞLİSİ 29 DİŞ	GEAR 4th 29 T		ABCD		◆
41	K20.00078	1297 304 369		2	3./ 4. VİTES SENKROMENÇ	ENGAGING RING			◆	◆
42	K20.00108	1297 304 484	(1297 304 402)	2	3./ 4. VİT.SENK.FRENLEME	SYNCHRONIZING CONE			◆	◆
43	K20.00081	1297 304 446		1	3./ 4. VİT.YILDIZ DİŞLİ	GUIDE SLEEVE			◆	◆
44	K20.00111	1297 304 436		6	1./2.-3./4.VİT.YILDIZ FİŞEĞİ	PRESSURE PIECE			◆	◆
45	K20.00110	0732 040 409		6	1./2.-3./4.VİT.YILDIZ YAYI	SPRING			◆	◆
46	K20.00098	1310 304 202	(1312 302 057)	1	3./ 4. VİT.SENK. HALKA	ENGAGING SLEEVE			◆	◆
			(1310 304 174)							
47	K20.00204	1297 306 120		4	HİLAL PABUCU	SLIDING PAD			◆	◆
48		1297 206 103	(1297 206 049)	1	3./4.VİTES HİLALİ	GEAR SHIT FORK 3rd/4th			◆	◆
49	K20.00068	1297 304 261	(1297 304 020)	1	3.VİTES DİŞLİSİ 34 DİŞ	GEAR 3rd 34 T		A	◆	

NOTES :

ABCD alfabetic letters are used in conjunction with the encoded parts.

NOTLAR :

ABCD alfabetik harfler ile kodlananparçalar birlikte kullanılır.

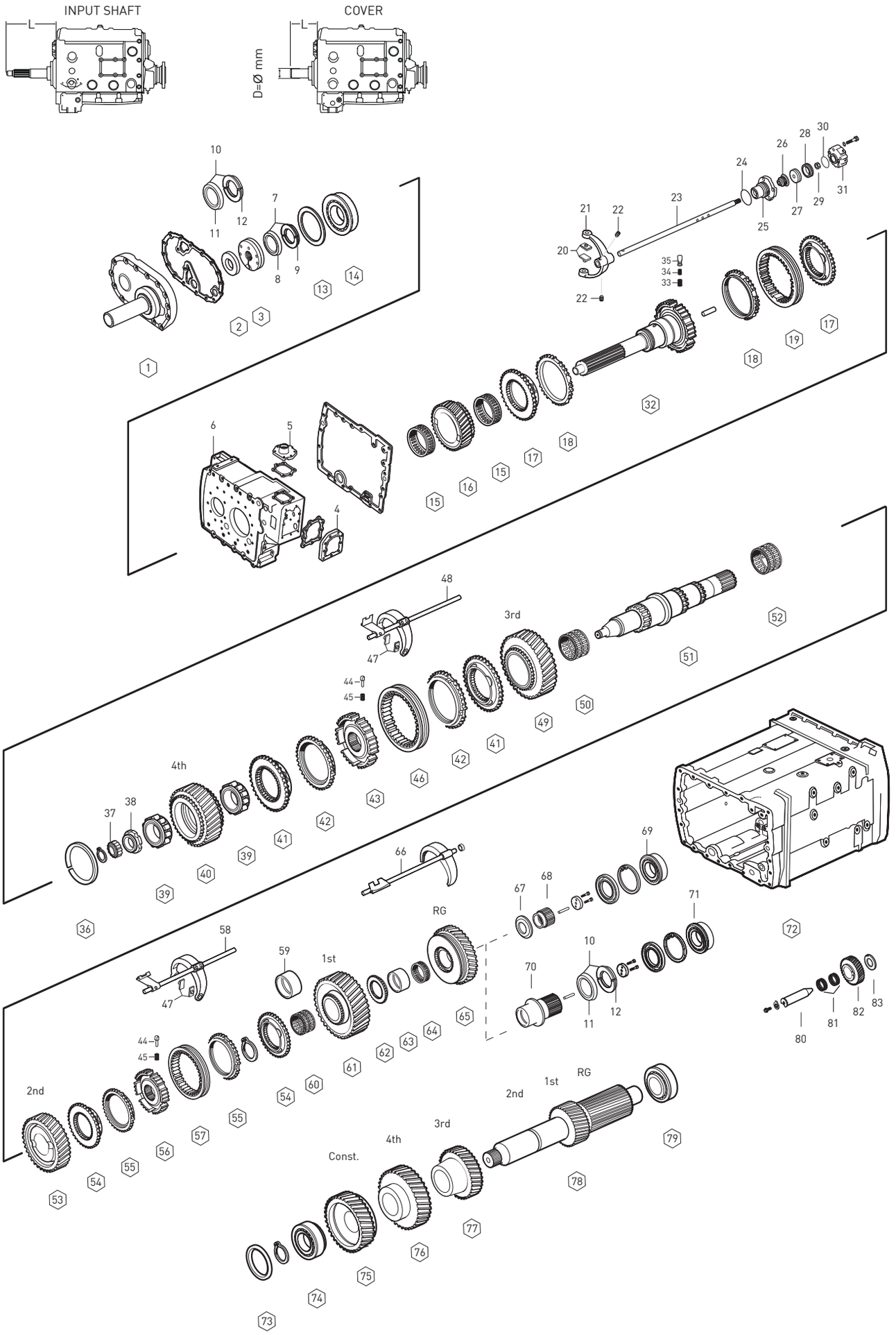

Original parts names, oem numbers, symbols and descriptions used in this catalogue are for reference purposes only.

Fig.	Kacmaz No.	Oem No	Oem Old No	Pcs.	Ürün Tanımı	Description	Sizes	Notes	DG 13.68-1.00	DG 17.06-1.00
49	K20.00077	1297 304 414	(1297 304 122)	1	3.VİTES DİŞLİSİ 34 DİŞ	GEAR 3rd 34 T		ABCD		◆
50	K20.01313	0735 320 451		1	3.VİTES MASURA BİLYA	NEEDLE CAGE	82x90x60mm		◆	◆
51	K20.00407	1297 304 181		1	KAMALI MİL	MAIN SHAFT		A	◆	
51	K20.00408	1297 304 193		1	KAMALI MİL	MAIN SHAFT		ABCD		◆
52	K20.01318	0735 320 452		1	2.VİTES MASURA BİLYA	NEEDLE CAGE	82X90X55mm		◆	◆
53	K20.00070	1297 304 442	(1297 304 017)	1	2.VİTES DİŞLİSİ 38 DİŞ	GEAR 2nd 38 T		ABCD	◆	◆
54	K20.00079	1297 304 371		2	1./ 2.VİTES SENKROMENÇ	ENGAGING RING			◆	◆
55	K20.00112	1297 304 485	(1297 304 401)	2	1./ 2.VİT.SENK.FRENLEME	SYNCHRONIZING CONE			◆	◆
56	K20.00428	1297 304 445		1	1./ 2.VİT.YILDIZ DİŞLİ	GUIDE SLEEVE			◆	◆
57	K20.00082	1297 304 450	(1297 304 415)	1	1./ 2.VİT.SENK.HALKA	ENGAGING SLEEVE			◆	◆
58		1297 206 106	(1297 206 058)	1	1./2.VİTES HİLALİ	GEAR SHIT FORK 1st/2nd			◆	◆
59	K20.00409	1297 304 035		1	1.VİT.MAS.BİLYA ÇANAĞI	BEARING RACE			◆	◆
60	K20.01319	0735 320 487		1	1.VİTES MASURA BİLYA	NEEDLE CAGE	82X90X68mm		◆	◆
61	K20.00411	1297 304 441	(1297 304 152)	1	1.VİTES DİŞLİSİ 47 DİŞ	GEAR 1st 47 T		ABCD	◆	◆
62	K20.00412	1297 304 154		1	GERİ VİT.YILDIZ DİŞLİ	GUIDE SLEEVE			◆	◆
63	K20.00413	1297 304 034		1	GERİ VİT.MAS.BİL.ÇANAĞI	BEARING RACE			◆	◆
64	K20.01320	0735 320 486		1	GERİ VİTES MASURA BİLYA	NEEDLE CAGE	78X86X44mm		◆	◆
65	K20.00415	1297 304 148		1	GERİ VİTES DİŞLİSİ 38 DİŞ	REVERSE GEAR 38 T		ABCD	◆	◆
66		1297 206 174	(1297 206 162)	1	GERİ VİTES HİLALİ	GEAR SHIT FORK/RG			◆	◆
67	K20.01526	1297 304 381	(1297 304 176)	1	GERİ VİTES DİŞLİ PULU	THRUST WASHER			◆	
68	K20.00072	1297 304 187		1	GÜNEŞ DİŞLİ 27 DİŞ	SUN GEAR 27 T			◆	
69	K20.01116	0750 118 006		1	GÜNEŞ DİŞLİ BİLYASI	ROLLER BEARING	65X140X33mm		◆	
70	K20.00073	1297 304 439	(1297 304 192)	1	GÜNEŞ DİŞLİ 24 DİŞ	SUN GEAR 24 T				◆
71	K20.01117	0750 118 180		1	GÜNEŞ DİŞLİ BİLYASI	ROLLER BEARING	80X140X33mm			◆
72		1297 301 146	(1297 301 105)	1	ŞANZIMAN ORTA GÖVDE	HOUSING		ABD	◆	◆
			(1297 301 148)							
			(1297 301 106)							
72		1297 301 147	(1297 301 093)	1	ŞANZIMAN ORTA GÖVDE	HOUSING		C		◆
73	K20.01648	0730 102 099		1	GRUP MİLİ ÖN BİLYA RAYNELİ	SHIM	3.00mm		◆	◆
73	K20.01649	0730 102 060		1	GRUP MİLİ ÖN BİLYA RAYNELİ	SHIM	2.60mm		◆	◆
73	K20.01650	0730 102 068		1	GRUP MİLİ ÖN BİLYA RAYNELİ	SHIM	2.20mm		◆	◆
73	K20.01651	0730 102 075		1	GRUP MİLİ ÖN BİLYA RAYNELİ	SHIM	1.85mm		◆	◆
73	K20.01652	2001652		1	GRUP MİLİ ÖN BİLYA RAYNELİ	SHIM	0.30mm		◆	◆
73	K20.01653	2001653		1	GRUP MİLİ ÖN BİLYA RAYNELİ	SHIM	0.20mm		◆	◆
73	K20.01654	2001654		1	GRUP MİLİ ÖN BİLYA RAYNELİ	SHIM	0.10mm		◆	◆
74	K20.01124	0750 117 010	(0750 117 030)	1	GRUP MİLİ ÖN BİLYA	ROLLER BEARING	50.8X100X35mm		◆	◆
75	K20.00053	1297 303 066	(1297 303 039)	1	OVARD.DİŞLİ KARŞ.34 DİŞ	CONSTANT GEAR 34 T		A	◆	
75	K20.00055	1297 303 086	(1297 303 043)	1	OVARD.DİŞLİ KARŞ.35 DİŞ	CONSTANT GEAR 35 T		ABCD		◆
76	K20.00062	1297 303 065	(1297 303 026)	1	4.VİTES DİŞLİ KARŞ.31 DİŞ	GEAR 4th 31 T		A	◆	
76	K20.00061	1297 303 123	(1297 303 041)	1	4.VİTES DİŞLİ KARŞ.32 DİŞ	GEAR 4th 32 T		ABCD		◆
77	K20.00057	1297 303 067	(1297 303 009)	1	3.VİTES DİŞLİ KARŞ.25 DİŞ	GEAR 3rd 25 T		A	◆	

NOTES :

ABCD alfabetic letters are used in conjunction with the encoded parts.

NOTLAR :

ABCD alfabetik harfler ile kodlananparçalar birlikte kullanılır.

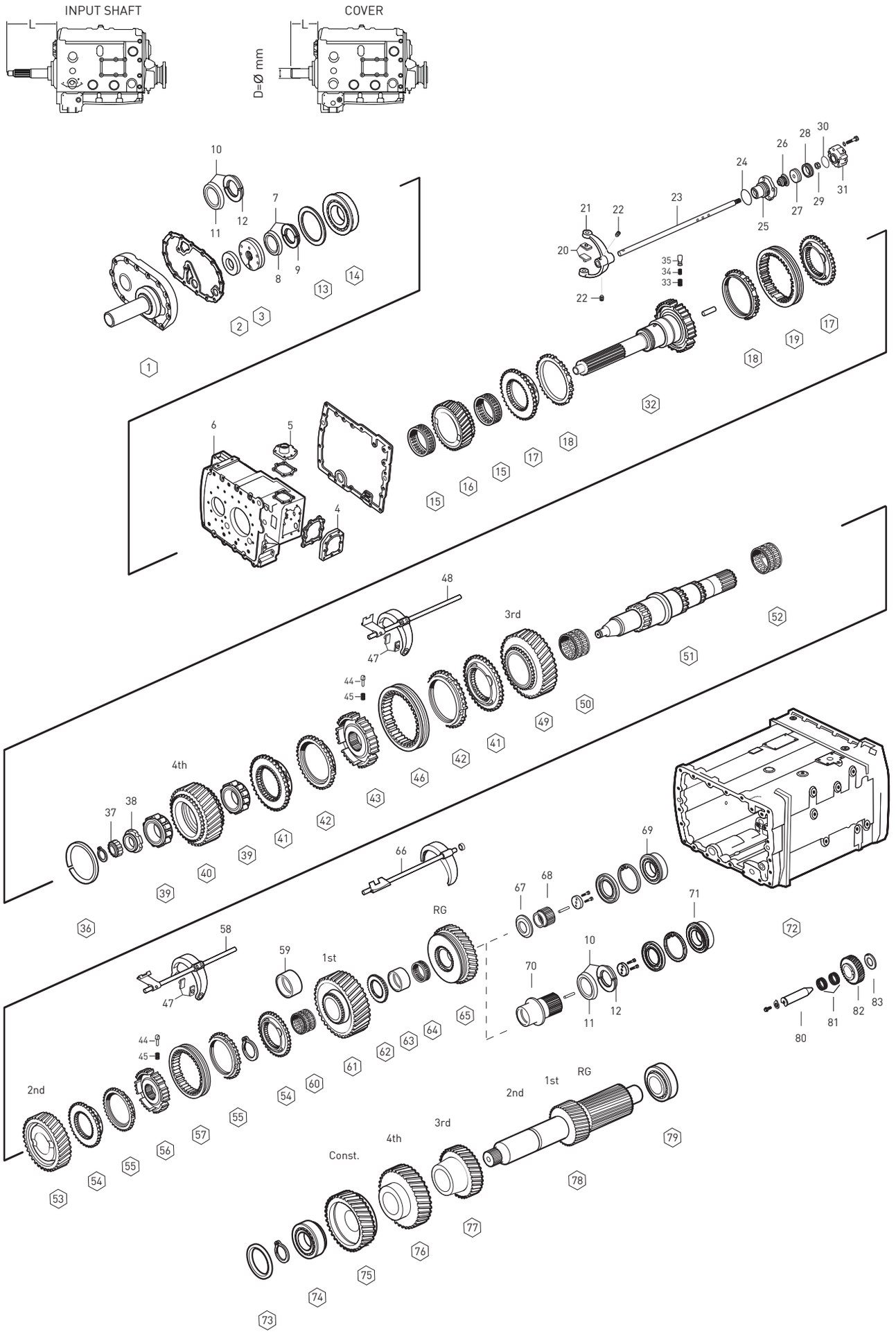

Original parts names, oem numbers, symbols and descriptions used in this catalogue are for reference purposes only.

Fig.	Kacmaz No.	Oem No	Oem Old No	Pcs.	Ürün Tanımı	Description	Sizes	Notes	DG 13.68-1.00	DG 17.06-1.00
77	K20.00058	1297 303 132	(1297 303 042)	1	3.VİTES DİŞLİ KARŞ.26 DİŞ	GEAR 3rd 26 T		ABCD		◆
78	K20.00076	1297 303 140	(1297 303 064)	1	ALT GRUP MİLİ 17-20 DİŞ	COUNTER SHAFT 17-20 T		ABCD	◆	◆
79	K20.01126	0750 117 009		1	GRUP MİLİ ARKA BİLYA	ROLLER BEARING	49.2X103.1X43.6mm		◆	◆
80	K20.00598	1295 305 056	(1295 305 008)	1	KÜÇÜK GERİ VİTES PİMİ	PIN			◆	◆
			(1295 305 057)							
81	K20.01335	0750 115 011	(0735 320 042)	2	KÜÇÜK GERİ VİT.MAS.BİLYA	NEEDLE CAGE	40.0X60.0X26.0mm		◆	◆
82	K20.00600	1295 305 052		1	KÜÇÜK GERİ VİTES	REV.IDLER GEAR			◆	◆
83	K20.01655	0730 150 064		1	KÜÇÜK GERİ VİTES PULU	THRUST WASHER			◆	◆

NOTES :
ABCD alfabetic letters are used in conjunction with the encoded parts.

NOTLAR :
ABCD alfabetik harfler ile kodlanan parçalar birlikte kullanılır.

Original parts names, oem numbers, symbols and descriptions used in this catalogue are for reference purposes only.

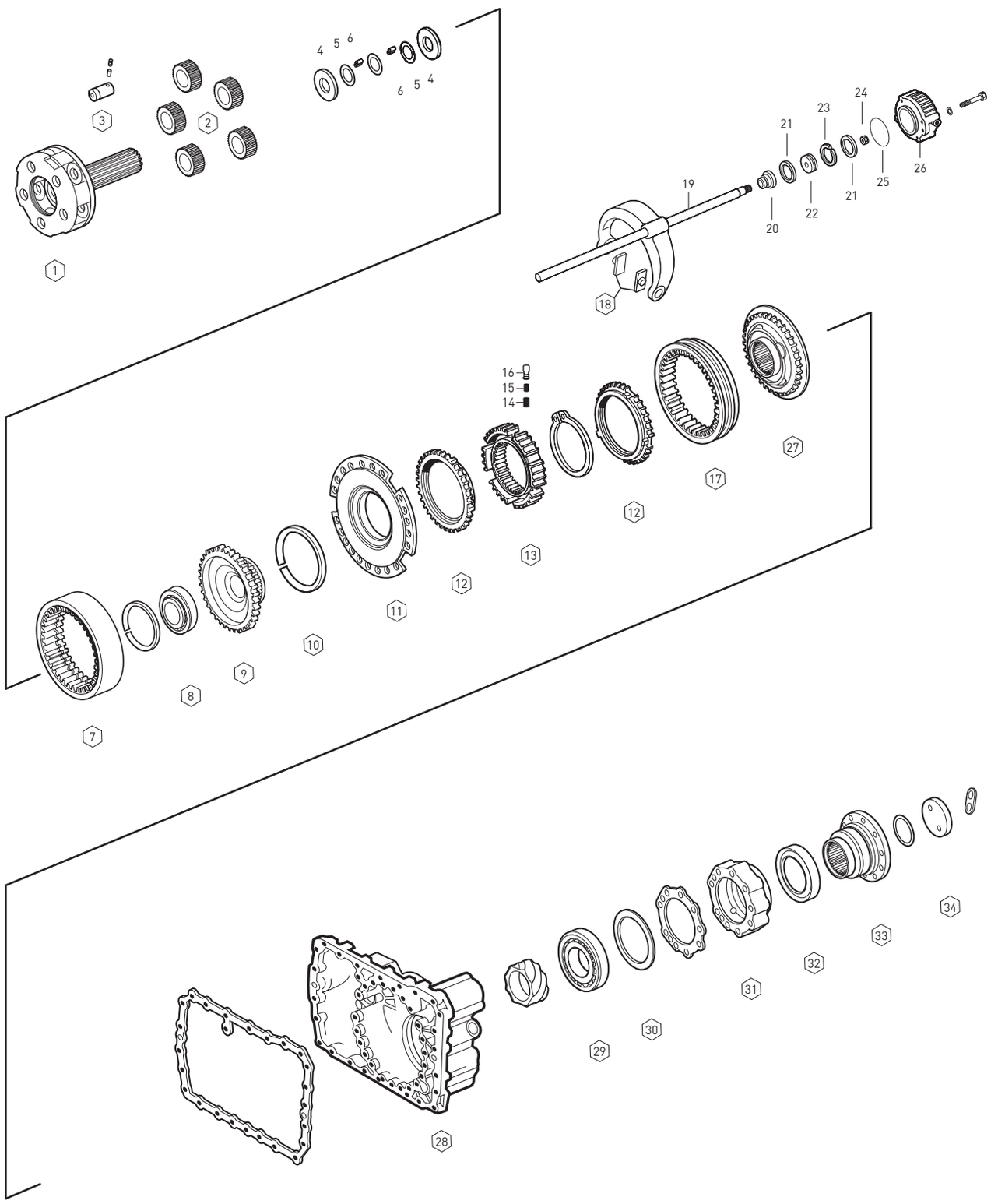

Original parts names, oem numbers, symbols and descriptions used in this catalogue are for reference purposes only.

Fig.	Kacmaz No.	Oem No	Oem Old No	Pcs.	Ürün Tanımı	Description	Sizes	Notes	DG 13.68-1.00	DG 17.06-1.00	DG 17.06-1.00
1	K20.00613	1297 232 039	(1297 232 027)	1	ŞANZIMAN HEYKELİ	PLANETARY CARRIER		A	◆		
1	K20.00603	1297 232 045	(1297 232 026)	1	ŞANZIMAN HEYKELİ	PLANETARY CARRIER		B		◆	
1	K20.00619	1316 232 005	(1312 232 013)	1	ŞANZIMAN HEYKELİ	PLANETARY CARRIER		C			◆
2	K20.00118	1297 232 023	(1297 332 022)	5	HEYKEL KOZA DİŞLİ TAKIMI	PLANETARY GEAR SET		A	◆		
2	K20.00417	1297 232 024	(1297 332 028)	5	HEYKEL KOZA DİŞLİ TAKIMI	PLANETARY GEAR SET		B		◆	
2	K20.00119	1312 232 014		5	HEYKEL KOZA DİŞLİ TAKIMI	PLANETARY GEAR SET		C			◆
3	K20.00418	1297 332 109	(1297 332 005)	5	HEYKEL KOZA DİŞLİ PİMİ	PLANET SHAFT		AB	◆	◆	
3	K20.00444	1312 332 026		5	HEYKEL KOZA DİŞLİ PİMİ	PLANET SHAFT		C			◆
4	K20.01511	0501 306 212		10	HEYKEL KOZA DİŞLİ PULU	THRUST WASHER		AB	◆	◆	
4	K20.01513	0501 308 981		10	HEYKEL KOZA DİŞLİ PULU	THRUST WASHER		C			◆
5	K20.01512	0730 103 846		15	HEYKEL KOZA DİŞLİ PULU	THRUST WASHER		AB	◆	◆	
5	K20.01514	0730 107 168		15	HEYKEL KOZA DİŞLİ PULU	THRUST WASHER		C			◆
6	K20.01453	0750 119 143	(0750 119 109)	120	HEYKEL KOZA DİŞ.TANE BİLYA	NEEDLE ROLLER	10X16.8mm	AB	◆	◆	
6	K20.01454	0750 119 116		140	HEYKEL KOZA DİŞ.TANE BİLYA	NEEDLE ROLLER	10X16.8mm	C			◆
7	K20.00614	1297 332 080	(1297 332 036)	1	ÇEMBER DİŞLİ	RING WHEEL		A	◆		
7	K20.00605	1295 332 086		1	ÇEMBER DİŞLİ 86 DİŞ	RING WHEEL 86 T		BC		◆	◆
8	K20.01133	0750 116 165	(0635 338 049)	1	PLANET ÇAN DİŞLİ BİLYASI	ROLLER BEARING	80X110X16mm	AB	◆	◆	
8	K20.01135	0635 338 035		1	PLANET ÇAN DİŞLİ BİLYASI	ROLLER BEARING	100X125X13mm	C			◆
9	K20.00615	1297 332 017		1	PLANET ÇAN DİŞLİ	CARRIER HUB		A	◆		
9	K20.00607	1297 332 035		1	PLANET ÇAN DİŞLİ 86 DİŞ	CARRIER HUB 86 T		B		◆	
9	K20.00620	1297 332 120		1	PLANET ÇAN DİŞLİ 86 DİŞ	CARRIER HUB 86 T		C			◆
10	K20.01656	0730 505 056	(0730 505 055)	1	ÇEMBER DİŞLİ SEGMANI	SPRING RING	3.20mm		◆	◆	◆
11	K20.00007	1296 233 006		1	TEPSİ SENKROMENÇ	FLANGE			◆	◆	◆
12	K20.00038	1296 333 045	(1296 333 022)	2	AĞIR SERİ SENK.FRENLEME	SYNCHRONIZING CONE			◆	◆	◆
13	K20.00363	1296 333 002		1	AĞIR SERİ YILDIZ DİŞLİ	GUIDE SLEEVE		AB	◆	◆	
13	K20.00148	1297 333 115		1	AĞIR SERİ YILDIZ DİŞLİ	GUIDE SLEEVE		C			◆
14	K20.00469	0732 040 385		9	AĞIR SERİ YILDIZ DİŞLİ YAYI	SPRING			◆	◆	◆
15	K20.00470	0732 040 386		9	AĞIR SERİ YILDIZ DİŞLİ YAYI	SPRING			◆	◆	◆
16	K20.00471	1240 304 278		9	AĞIR SERİ YILDIZ DİŞLİ FİŞEĞİ	PRESSURE PIECE			◆	◆	◆
17	K20.00039	1296 333 023	(0769 186 286)	1	AĞIR SERİ SENK.HALKA	ENGAGING SLEEVE			◆	◆	◆
18	K20.00341	1296 334 004		2	AĞIR SERİ HİLAL PABUCU	SLIDING PAD			◆	◆	◆
19		1312 234 002		1	AĞIR SERİ HİLALİ	GEAR SHIFT FORK			◆	◆	◆
20	K20.01016	0750 112 034		1	AĞIR SERİ HİLAL MİL KEÇESİ	FLANGE PACKING	25.0X38.0X14.2mm		◆	◆	◆
21	K20.01024	0734 317 150	(0750 112 019)	2	AĞIR SERİ HAVA KEÇESİ	SEALING RING	80.0X90.0X4.8mm		◆	◆	◆
22		1296 334 039		1	AĞIR SERİ HİLAL MİL PİSTONU	PISTON			◆	◆	◆
23	K20.01657	0750 112 066		1	AĞIR SERİ HİLAL MİL FİBERİ	GUIDE RING			◆	◆	◆
24	K20.01774	0737 006 095		1	AĞIR SERİ HİLAL MİL SOMUNU	NUT	M16X1.5mm		◆	◆	◆
25		0634 314 019		1	AĞIR SERİ SİLİNDİR ORİNGİ	O-RING	94.0X3.0mm		◆	◆	◆
26	K20.00845	1295 334 075		1	AĞIR SERİ SİLİNDİR GÖVDESİ	CYLINDER			◆	◆	◆
27	K20.00006	1313 233 001	(1297 233 018)	1	SERİ SENKROMENÇ	ENGAGING RING	38spl.	AB	◆	◆	
27	K20.00075	1297 233 056		1	SERİ SENKROMENÇ	ENGAGING RING		C			◆

NOTES :

A : Alphabetical letters used in conjunction with these products are classified.
B : Alphabetical letters used in conjunction with these products are classified.
C : Alphabetical letters used in conjunction with these products are classified.

NOTLAR :

A : Alfabetik harf ile sınıflandırılan ürünler, birlikte kullanılır.
B : Alfabetik harf ile sınıflandırılan ürünler, birlikte kullanılır.
C : Alfabetik harf ile sınıflandırılan ürünler, birlikte kullanılır.

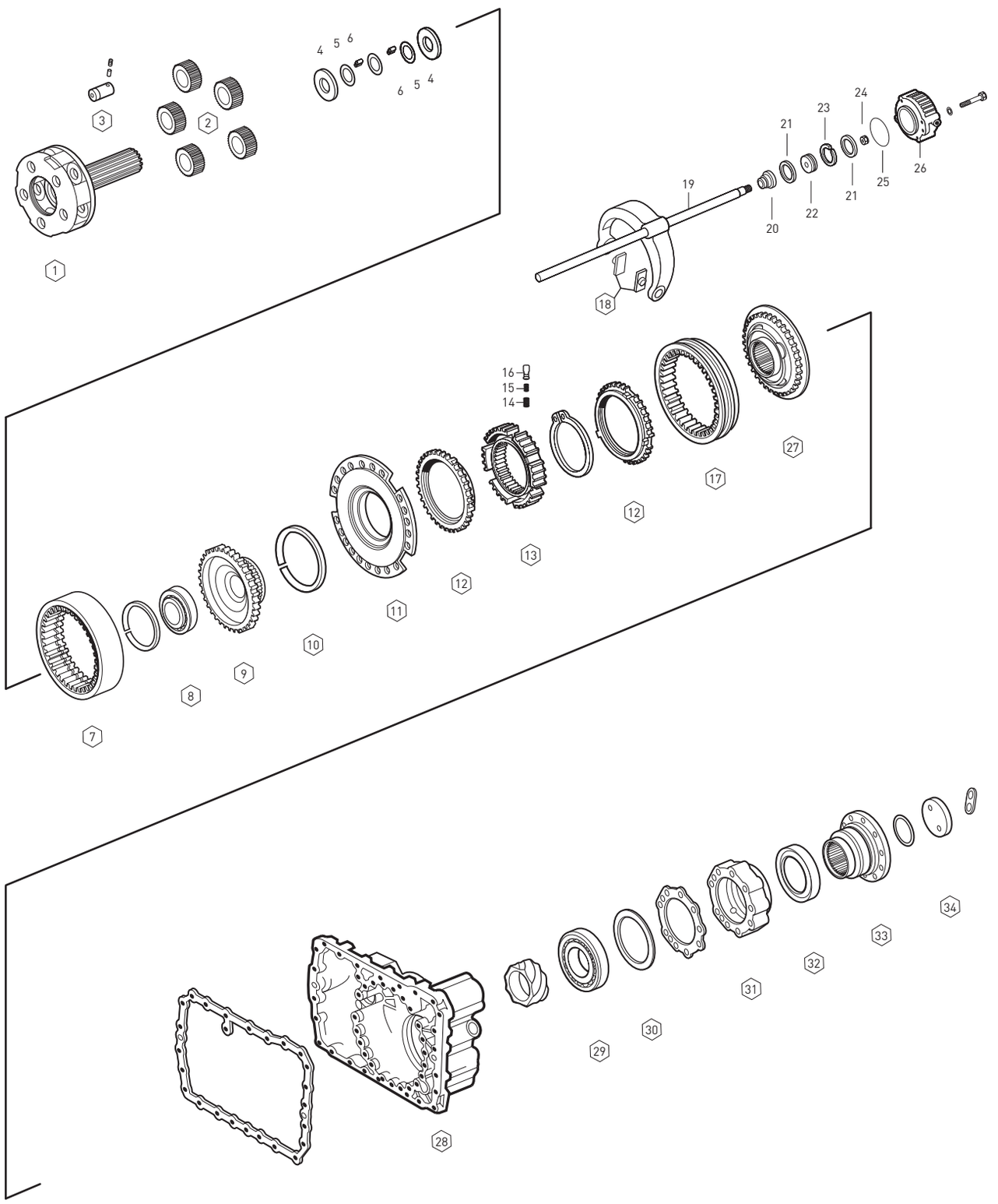

Original parts names, oem numbers, symbols and descriptions used in this catalogue are for reference purposes only.

Fig.	Kacmaz No.	Oem No	Oem Old No	Pcs.	Ürün Tanımı	Description	Sizes	Notes	DG 13.68-1.00	DG 17.06-1.00	DG 17.06-1.00
28		1296 301 133		1	ŞANZIMAN ARKA GÖVDE	HOUSING		A	◆		
28		1296 301 180		1	ŞANZIMAN ARKA GÖVDE	HOUSING		B		◆	
28		1313 301 009		1	ŞANZIMAN ARKA GÖVDE	HOUSING		C			◆
29	K20.01134	0750 116 394	(0750 116 002)	1	ŞANZIMAN KUTU BİLYASI	ROLLER BEARING	90X160X30mm		◆	◆	◆
30	K20.01658	0730 100 115		1	ŞANZ.ARKA BİLYA RAYNELİ	SHIM	0.30mm		◆	◆	◆
30	K20.01659	0730 100 116		1	ŞANZ.ARKA BİLYA RAYNELİ	SHIM	0.20mm		◆	◆	◆
30	K20.01660	2001660		1	ŞANZ.ARKA BİLYA RAYNELİ	SHIM	0.10mm		◆	◆	◆
31		1295 231 001		1	ŞANZ.ARKA BİLYA KAPAĞI	BEARING COVER		AB	◆	◆	
31		1315 231 002	(1296 301 140)	1	ŞANZ.ARKA BİLYA KAPAĞI	BEARING COVER		C			◆
32	K20.01013	0750 111 341		1	ŞANZ.ARKA KAPAK KEÇESİ	OIL SEAL	105X130X12mm			◆	◆
33	K20.00371	1297 338 010		1	ŞANZIMAN FLANŞI	COMPANION FLANGE	10-H,Ø180mm	A	◆		
33	K20.00518	1297 338 051		1	ŞANZIMAN FLANŞI	COMPANION FLANGE	10-H,Ø180mm	B		◆	
33	K20.00427	1297 333 110		1	ŞANZIMAN FLANŞI	COMPANION FLANGE	4-H,Ø180mm	C			◆
34	K20.01661	1295 332 051		1	ŞANZIMAN FLANŞ PULU	WASHER			◆	◆	◆

NOTES :

A : Alphabetical letters used in conjunction with these products are classified.
B : Alphabetical letters used in conjunction with these products are classified.
C : Alphabetical letters used in conjunction with these products are classified.

NOTLAR :

A : Alfabetik harf ile sınıflandırılan ürünler, birlikte kullanılır.
B : Alfabetik harf ile sınıflandırılan ürünler, birlikte kullanılır.
C : Alfabetik harf ile sınıflandırılan ürünler, birlikte kullanılır.

SYNCHRONIZER KIT CONST.

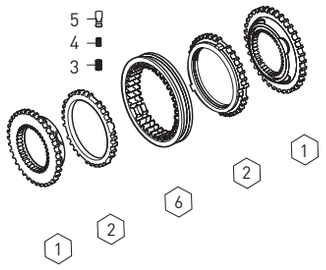

Fig.	Kacmaz No.	Oem No	Oem Old No	Pcs.	Ürün Tanımı	Description
	K20.00486	1295 298 936		Kit	TAKVİYE SENKROMENÇ KİT	SYNCHRONIZER KIT Const
1	K20.00019	1295 304 278		2	TAKVİYE SENKROMENÇ	ENGAGING RING
2	K20.00021	1304 304 686	(1295 304 004)	2	TAKVİYE SENK.FRENLEME	SYNCHRONIZING CONE
3	K20.00469	0732 040 385		3	TAKVİYE YILDIZ DİŞLİ YAYI	SPRING
4	K20.00470	0732 040 386		3	TAKVİYE YILDIZ DİŞLİ YAYI	SPRING
5	K20.00471	1240 304 278		3	TAK.YILDIZ DİŞLİ FİŞEĞİ	PRESSURE PIECE
6	K20.00020	1295 304 002		1	TAKVİYE SENK.HALKA	ENGAGING SLEEVE

SYNCHRONIZER KIT 3rd/4th

Fig.	Kacmaz No.	Oem No	Oem Old No	Pcs.	Ürün Tanımı	Description
	K20.00503	1297 204 071		Kit	PRİZ.SENKROMENÇ KİT	SYNCH.KIT 3rd/4th
1	K20.00078	1297 304 369		1	PRİZ.SENKROMENÇ	ENGAGING RING
2	K20.00108	1297 304 484	(1297 304 402)	1	PRİZ.SENK.FRENLEME	SYNCHRONIZING CONE

SYNCHRONIZER KIT 3rd/4th

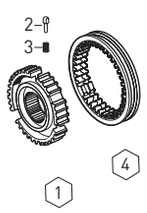

Fig.	Kacmaz No.	Oem No	Oem Old No	Pcs.	Ürün Tanımı	Description
	K20.00504	1297 204 069		Kit	3./4.VİT.HALKA YILDIZ KİTİ	SYNCH.KIT 3rd/4th
1	K20.00081	1297 304 446		1	3./4.VİT.YILDIZ DİŞLİ	GUIDE SLEEVE
2	K20.00111	1297 304 436		3	3./4.VİT.YILDIZ DİŞLİ FİŞEĞİ	PRESSURE PIECE
3	K20.00110	0732 040 409		3	3./4.VİT.YILDIZ DİŞLİ YAYI	SPRING
4	K20.00098	1310 304 202	(1312 302 057)	1	3./4.VİT.SENK.HALKA	ENGAGING SLEEVE
			(1310 304 174)			

SYNCHRONIZER KIT 3rd/4th

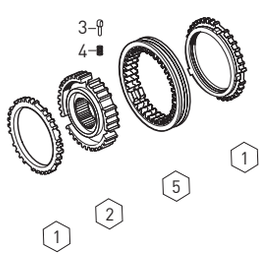

Fig.	Kacmaz No.	Oem No	Oem Old No	Pcs.	Ürün Tanımı	Description
	K20.00505	1297 204 054		Kit	3./4.VİT.SENKROMENÇ KİT	SYNCH.KIT 3rd/4th
1	K20.00108	1297 304 484	(1297 304 402)	2	3./4.VİT.FRENLEME	SYNCH.CONE
2	K20.00081	1297 304 446		1	3./4.VİT.YILDIZ DİŞLİ	GUIDE SLEEVE
3	K20.00111	1297 304 436		3	3./4.VİT.YILDIZ DİŞLİ FİŞEĞİ	PRESSURE PIECE
4	K20.00110	0732 040 409		3	3./4.VİT.YILDIZ DİŞLİ YAYI	SPRING
5	K20.00098	1310 304 202	(1312 302 057)	1	3./4.VİT.SENK.HALKA	ENGAGING SLEEVE
			(1310 304 174)			

SYNCHRONIZER KIT 3rd/4th

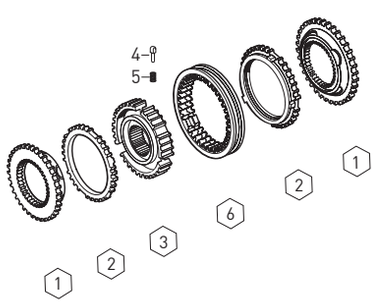

Fig.	Kacmaz No.	Oem No	Oem Old No	Pcs.	Ürün Tanımı	Description
	K20.00506	1297 298 959		Kit	3./4.VİT.SENKROMENÇ KİT	SYNCH.KIT 3rd/4th
1	K20.00078	1297 304 369		2	3./4.VİT.SENKROMENÇ	ENGAGING RING
2	K20.00108	1297 304 484	(1297 304 402)	2	3./4.VİT.FRENLEME	SYNCH.CONE
3	K20.00081	1297 304 446		1	3./4.VİT.YILDIZ DİŞLİ	GUIDE SLEEVE
4	K20.00111	1297 304 436		3	3./4.VİT.YILDIZ DİŞLİ FİŞEĞİ	PRESSURE PIECE
5	K20.00110	0732 040 409		3	3./4.VİT.YILDIZ DİŞLİ YAYI	SPRING
6	K20.00098	1310 304 202	(1312 302 057)	1	3./4.VİT.SENK.HALKA	ENGAGING SLEEVE
			(1310 304 174)			

Original parts names, oem numbers, symbols and descriptions used in this catalogue are for reference purposes only.

Fig.	Kacmaz No.	Oem No	Oem Old No	Pcs.	Ürün Tanımı	Description
	K20.00507	1297 204 070		Kit	1./2.VİT.SENKROMENÇ KİT	SYNCH.KIT 1st/2nd
1	K20.00079	1297 304 371		1	1./2.VİT.SENKROMENÇ	ENGAGING RING
2	K20.00112	1297 304 485	(1297 304 401)	1	1./2.VİT.SENK.FRENLEME	SYNCHRONIZING CONE

SYNCHRONIZER KIT 1st/2nd

Fig.	Kacmaz No.	Oem No	Oem Old No	Pcs.	Ürün Tanımı	Description
	K20.00508	1297 204 067		Kit	1./2.VİT.HALKA YILDIZ KİTİ	SYNCH.KIT 1st/2nd
1	K20.00428	1297 304 445		1	1./2.VİT.YILDIZ DİŞLİ	GUIDE SLEEVE
2	K20.00111	1297 304 436		3	1./2.VİT.YILDIZ DİŞLİ FİŞEĞİ	PRESSURE PIECE
3	K20.00110	0732 040 409		3	1./2.VİT.YILDIZ DİŞLİ YAYI	SPRING
4	K20.00082	1297 304 450	(1297 304 415)	1	1./2.VİT.SENK.HALKA	ENGAGING SLEEVE

SYNCHRONIZER KIT 1st/2nd

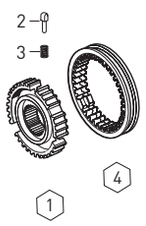

Fig.	Kacmaz No.	Oem No	Oem Old No	Pcs.	Ürün Tanımı	Description
	K20.00509	1297 204 053		Kit	1./2.VİT.SENKROMENÇ KİT	SYNCH.KIT 1st/2nd
1	K20.00112	1297 304 485	(1297 304 401)	2	1./2.VİT.FRENLEME	SYNCH.CONE
2	K20.00428	1297 304 445		1	1./2.VİT.YILDIZ DİŞLİ	GUIDE SLEEVE
3	K20.00111	1297 304 436		3	1./2.VİT.YILDIZ DİŞLİ FİŞEĞİ	PRESSURE PIECE
4	K20.00110	0732 040 409		3	1./2.VİT.YILDIZ DİŞLİ YAYI	SPRING
5	K20.00082	1297 304 450	(1297 304 415)	1	1./2.VİT.SENK.HALKA	ENGAGING SLEEVE

SYNCHRONIZER KIT 1st/2nd

Fig.	Kacmaz No.	Oem No	Oem Old No	Pcs.	Ürün Tanımı	Description
	K20.00510	1297 298 957		Kit	1./2.VİT.SENKROMENÇ KİT	SYNCH.KIT 1st/2nd
1	K20.00079	1297 304 371		2	1./2.VİT.SENKROMENÇ	ENGAGING RING
2	K20.00112	1297 304 485	(1297 304 401)	2	1./2.VİT.FRENLEME	SYNCH.CONE
3	K20.00428	1297 304 445		1	1./2.VİT.YILDIZ DİŞLİ	GUIDE SLEEVE
4	K20.00111	1297 304 436		3	1./2.VİT.YILDIZ DİŞLİ FİŞEĞİ	PRESSURE PIECE
5	K20.00110	0732 040 409		3	1./2.VİT.YILDIZ DİŞLİ YAYI	SPRING
6	K20.00082	1297 304 450	(1297 304 415)	1	1./2.VİT.SENK.HALKA	ENGAGING SLEEVE

SYNCHRONIZER KIT 1st/2nd

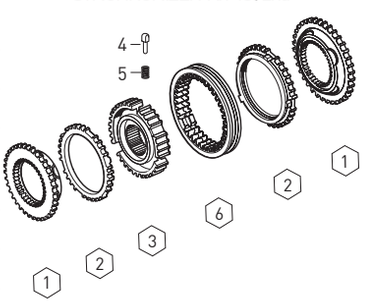

Fig.	Kacmaz No.	Oem No	Oem Old No	Pcs.	Ürün Tanımı	Description
	K20.00511	1297 298 912		Kit	AĞIR SERİ DİŞLİ TAKIMI	PLANETARY GEAR KIT
1	K20.00118	1297 232 023	(1297 332 022)	5	HEYKEL KOZA DİŞLİSİ	PLANETARY GEAR
2	K20.00418	1297 332 109	(1297 332 005)	5	HEYKEL KOZA DİŞLİ PİMİ	PLANETARY SHAFT
3	K20.01511	0501 306 212		10	HEYKEL KOZA DİŞLİ PULU	THRUST WASHER
4	K20.01512	0730 103 846		15	HEYKEL KOZA DİŞLİ PULU	THRUST WASHER
5	K20.01453	0750 119 109		120	HEYKEL KOZA DİŞ.BİLYASI	NEEDLE ROLLER (10X16.8)

PLANETARY GEAR KIT

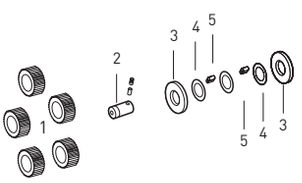

Original parts names, oem numbers, symbols and descriptions used in this catalogue are for reference purposes only.

PLANETARY GEAR KIT

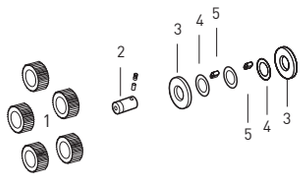

Fig.	Kacmaz No.	Oem No	Oem Old No	Pcs.	Ürün Tanımı	Description
	K20.00512	1297 298 919		Kit	AĞIR SERİ DİŞLİ TAKIMI	PLANETARY GEAR KIT
1	K20.00417	1297 232 024	(1297 332 028)	5	HEYKEL KOZA DİŞLİSİ	PLANETARY GEAR
2	K20.00418	1297 332 109	(1297 332 005)	5	HEYKEL KOZA DİŞLİ PİMİ	PLANETARY SHAFT
3	K20.01511	0501 306 212		10	HEYKEL KOZA DİŞLİ PULU	THRUST WASHER
4	K20.01512	0730 103 846		15	HEYKEL KOZA DİŞLİ PULU	THRUST WASHER
5	K20.01453	0750 119 109		120	HEYKEL KOZA DİŞ.BİLYASI	NEEDLE ROLLER (10X16.8)

SYNCHRONIZER KIT PLANETARY

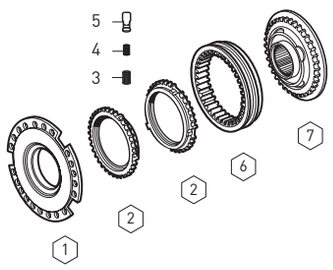

Fig.	Kacmaz No.	Oem No	Oem Old No	Pcs.	Ürün Tanımı	Description
	K20.00498	1295 298 939		Kit	AĞIR SERİ SENK.KİT	SYNCHRONIZER KIT
1	K20.00007	1296 233 006		1	TEPSİ SENKROMENÇ	FLANGE
2	K20.00038	1296 333 045	(1296 333 022)	2	AĞIR SERİ FRENLEME	SYNCHRONIZING CONE
3	K20.00469	0732 040 385		9	AĞIR SERİ YILDIZ DİŞLİ YAYI	SPRING
4	K20.00470	0732 040 386		9	AĞIR SERİ YILDIZ DİŞLİ YAYI	SPRING
5	K20.00471	1240 304 278		9	AĞIR SERİ YILDIZ DİŞ.FİŞEĞİ	PRESSURE PIECE
6	K20.00039	1296 333 023		1	AĞIR SERİ SENK.HALKA	ENGAGING SLEEVE
7	K20.00006	1313 233 001	(1297 233 018)	1	SERİ SENKROMENÇ	ENGAGING RING

SYNCHRONIZER KIT PLANETARY

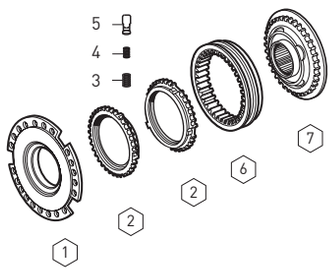

Fig.	Kacmaz No.	Oem No	Oem Old No	Pcs.	Ürün Tanımı	Description
	K20.00519	1295 298 962		Kit	AĞIR SERİ SENK.KİT	SYNCHRONIZER KIT
1	K20.00007	1296 233 006		1	TEPSİ SENKROMENÇ	FLANGE
2	K20.00038	1296 333 045	(1296 333 022)	2	AĞIR SERİ FRENLEME	SYNCHRONIZING CONE
3	K20.00469	0732 040 385		9	AĞIR SERİ YILDIZ DİŞLİ YAYI	SPRING
4	K20.00470	0732 040 386		9	AĞIR SERİ YILDIZ DİŞLİ YAYI	SPRING
5	K20.00471	1240 304 278		9	AĞIR SERİ YILDIZ DİŞ.FİŞEĞİ	PRESSURE PIECE
6	K20.00039	1296 333 023		1	AĞIR SERİ SENK.HALKA	ENGAGING SLEEVE
7	K20.00075	1297 233 056		1	SERİ SENKROMENÇ	ENGAGING RING

SYNCHRONIZER KIT PLANETARY

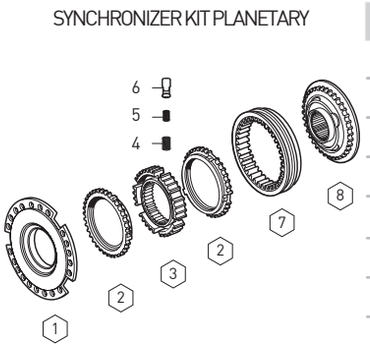

Fig.	Kacmaz No.	Oem No	Oem Old No	Pcs.	Ürün Tanımı	Description
	K20.00500	1295 298 950		Kit	AĞIR SERİ SENK.KİT	SYNCHRONIZER KIT
1	K20.00007	1296 233 006		1	TEPSİ SENKROMENÇ	FLANGE
2	K20.00038	1296 333 045	(1296 333 022)	2	AĞIR SERİ FRENLEME	SYNCHRONIZING CONE
3	K20.00363	1296 333 002		1	AĞIR SERİ YILDIZ DİŞLİ	GUIDE SLEEVE
4	K20.00469	0732 040 385		9	AĞIR SERİ YILDIZ DİŞLİ YAYI	SPRING
5	K20.00470	0732 040 386		9	AĞIR SERİ YILDIZ DİŞLİ YAYI	SPRING
6	K20.00471	1240 304 278		9	AĞIR SERİ YILDIZ DİŞ.FİŞEĞİ	PRESSURE PIECE
7	K20.00039	1296 333 023		1	AĞIR SERİ SENK.HALKA	ENGAGING SLEEVE
8	K20.00006	1313 233 001	(1297 233 018)	1	SERİ SENKROMENÇ	ENGAGING RING

Original parts names, oem numbers, symbols and descriptions used in this catalogue are for reference purposes only.

Fig.	Kacmaz No.	Oem No	Oem Old No	Pcs.	Ürün Tanımı	Description
1		1296 313 131		1	P.KİLİT EMNİYET SACI	RETAINING RING
2		0730 104 627		1	PARÇALI KİLİT	SPLIT RING
3		1296 313 238		1	PTO MİL KOVANI	SLIDING SLEEVE
4		0730 104 628		1	PTO DİŞLİ AYAR PULU	THRUST WASHER
5		1296 313 082		1	PTO DİŞLİ	GEAR 33 T
5		1296 313 083		1	PTO DİŞLİ	GEAR 36 T
5		1296 313 084		1	PTO DİŞLİ	GEAR 38 T
5		1296 313 085		1	PTO DİŞLİ	GEAR 39 T
5		1296 313 086		1	PTO DİŞLİ	GEAR 46 T
6	K20.00556	1296 213 028		1	PTO MİLİ DÜZ	INTERM.SHAFT
7	K20.00555	1296 213 028		1	PTO MİLİ FREZELİ	INTERM.SHAFT (Milled)
8		1296 313 125		1	PTO MİL SOMUNU	NUT
9		0735 410 139		1	PTO MİL BİLYASI	ROLLER BEARING
10		7429 032 102		1	PTO BİLYA KAPAK PULU	THRUST WASHER
11		1232 304 062		1	PTO BİLYA KAPAK RAYNELİ	SHIM (1.00mm)
11		1232 304 063		1	PTO BİLYA KAPAK RAYNELİ	SHIM (0.90mm)
11		1232 304 072		1	PTO BİLYA KAPAK RAYNELİ	SHIM (0.70mm)
12		1250 313 190		1	PTO BAĞLANTI KAPAĞI	COVER
13	K20.01013	0750 111 341		1	ŞANZ.ARKA KAPAK KEÇESİ	OIL SEAL

P.T.O. (POWER TAKE OFF)

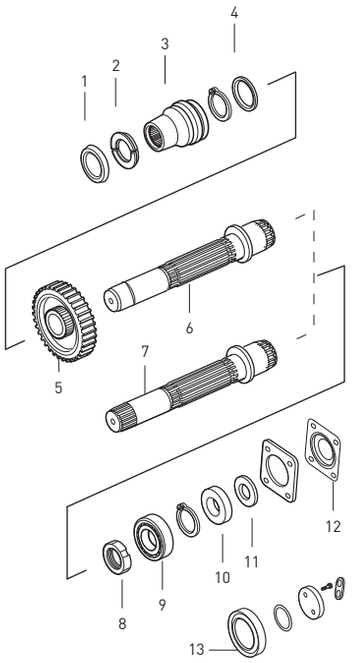

Fig.	Kacmaz No.	Oem No	Oem Old No	Pcs.	Ürün Tanımı	Description
1	K20.01584	1295 298 915		Kit	ŞANZIMAN CONTA TAKIMI	GASKET KIT
2		1313 301 038		1	ŞANZ.ÖN GÖVDE CONTASI	GASKET
3		1313 302 014		1	PRİZ.KEÇE KAPAK CONTASI	GASKET
4		1313 306 012		1	ŞANZ.HİLALİ KAPAK CONTASI	GASKET
5		1313 307 002		1	ŞANZ.ÖN GÖVDE ARKA CONTA	GASKET
5		1313 307 020		2	ŞANZ.KULE KAPAK CONTASI	GASKET
5		1313 307 003		1	ŞANZ.KULE KAPAK CONTASI	GASKET
5		1313 307 004		1	ŞANZ.KULE ALT KAPAK CONTASI	GASKET
5		1313 307 022		1	ŞANZ.KULE ÜST KAPAK CONTASI	GASKET
6		1313 301 037		1	ŞANZ.ARKA GÖVDE CONTASI	GASKET
7		1313 301 036		1	ŞANZ.BİLYA KAPAK CONTASI	GASKET
8	K20.02108	1238 308 201		1	PTO BAĞLANTI KAPAK CONTASI	GASKET
9		1313 307 005		1	ŞANZ.İSTİNAT KAPAK CONTASI	GASKET
10		1313 307 006		1	ŞANZ.İSTİNAT KAPAK CONTASI	GASKET

GEARBOX GASKET KIT

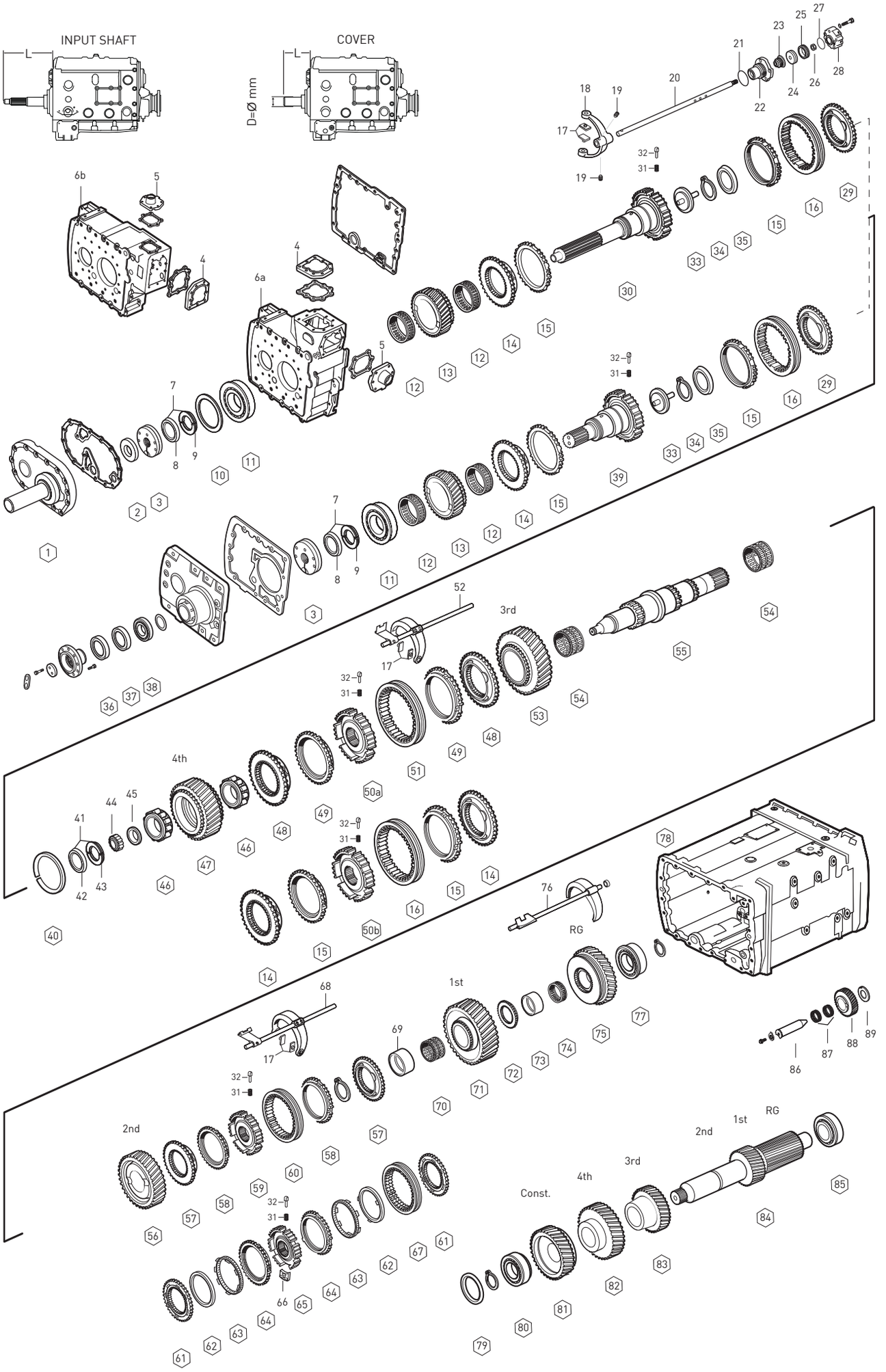

Original parts names, oem numbers, symbols and descriptions used in this catalogue are for reference purposes only.

Fig.	Kacmaz No.	Oem No	Oem Old No	Pcs.	Ürün Tanımı	Description	Sizes	Notes	SG 13.80-0.84	DG 16.47-1.00
1		1312 302 036		1	PRİZDİREK KEÇE KAPAĞI	COVER	L=170 D=60	A	◆	
1		1312 302 047		1	PRİZDİREK KEÇE KAPAĞI	COVER	L=170 D=62.6	B		◆
1		1312 302 052		1	PRİZDİREK KEÇE KAPAĞI	COVER	L=180 D=66	A		◆
1		1312 302 054		1	PRİZDİREK KEÇE KAPAĞI	COVER	L=190 D=62	B	◆	
1		1312 302 081		1	PRİZDİREK KEÇE KAPAĞI	COVER	L=190 D=60	F	◆	◆
1		1312 302 096		1	PRİZDİREK KEÇE KAPAĞI	COVER	L=147 D=60	C	◆	◆
2	K20.01003	0734 310 387		1	PRİZDİREK KEÇESİ	OIL SEAL	55X75X8mm	ABCD	◆	◆
2	K20.01004	0634 310 733		1	PRİZDİREK KEÇESİ	OIL SEAL	90X110X13mm	E	◆	◆
3	K20.00484	1295 202 041		1	YAĞ POMPASI	OIL PUMP			◆	◆
4	K20.00561	1295 307 479		1	ŞANZIMAN KULE KAPAĞI	COVER			◆	◆
5	K20.00597	1295 307 434		1	ŞANZIMAN KULE KAPAĞI	COVER			◆	◆
6a		1295 301 294	(1295 301 169)	1	ŞANZIMAN ÖN GÖVDE	HOUSING		F		◆
6a		1295 301 291	(1295 301 286)	1	ŞANZIMAN ÖN GÖVDE	HOUSING		F	◆	
6b		1296 301 202		1	ŞANZIMAN ÖN GÖVDE	HOUSING		C	◆	
6b		1296 301 205		1	ŞANZIMAN ÖN GÖVDE	HOUSING		ABCG	◆	◆
6b		1296 301 208		1	ŞANZIMAN ÖN GÖVDE	HOUSING		D	◆	◆
6b		1296 301 227	(1296 301 228)	1	ŞANZIMAN ÖN GÖVDE	HOUSING		E	◆	◆
7	K20.01662	1499 298 135		1	EMN.SACI VE P.KİLİT TAK.	SPLIT RING KIT	4.30mm	(1)	◆	◆
7	K20.01664	1499 298 133		1	EMN.SACI VE P.KİLİT TAK.	SPLIT RING KIT	4.20mm	(2)	◆	◆
7	K20.01666	1499 298 131		1	EMN.SACI VE P.KİLİT TAK.	SPLIT RING KIT	4.10mm	(3)	◆	◆
7	K20.01555	1499 298 129		1	EMN.SACI VE P.KİLİT TAK.	SPLIT RING KIT	4.00mm	(4)	◆	◆
7	K20.01557	1499 298 127		1	EMN.SACI VE P.KİLİT TAK.	SPLIT RING KIT	3.90mm	(5)	◆	◆
7	K20.01559	1499 298 125		1	EMN.SACI VE P.KİLİT TAK.	SPLIT RING KIT	3.80mm	(6)	◆	◆
8	K20.01554	0730 061 816		1	P. KİLİT EMNİYET SACI	RETAINING RING			◆	◆
9	K20.01663	0730 106 168		2	PARÇALI KİLİT	SPLIT RING	4.30mm		◆	◆
9	K20.01665	0730 106 166		2	PARÇALI KİLİT	SPLIT RING	4.20mm		◆	◆
9	K20.01667	0730 106 164		2	PARÇALI KİLİT	SPLIT RING	4.10mm		◆	◆
9	K20.01556	0730 106 162		2	PARÇALI KİLİT	SPLIT RING	4.00mm		◆	◆
9	K20.01558	0730 106 160		2	PARÇALI KİLİT	SPLIT RING	3.90mm		◆	◆
9	K20.01560	0730 106 158		2	PARÇALI KİLİT	SPLIT RING	3.80mm		◆	◆
10	K20.01668	0730 005 748		1	PRİZ.ÖN BİLYA RAYNELİ	SHIM	0.90mm		◆	◆
10	K20.01669	0730 005 743		1	PRİZ.ÖN BİLYA RAYNELİ	SHIM	0.65mm		◆	◆
10	K20.01670	2050 309 066		1	PRİZ.ÖN BİLYA RAYNELİ	SHIM	0.50mm		◆	◆
10	K20.01671	2050 309 067		1	PRİZ.ÖN BİLYA RAYNELİ	SHIM	0.30mm		◆	◆
10	K20.01582	0730 005 747		1	PRİZ.ÖN BİLYA RAYNELİ	SHIM	0.25mm		◆	◆
10	K20.01672	2050 309 068		1	PRİZ.ÖN BİLYA RAYNELİ	SHIM	0.20mm		◆	◆
10	K20.01673	2001673		1	PRİZ.ÖN BİLYA RAYNELİ	SHIM	0.10mm		◆	◆
11	K20.01103	0750 117 431		1	PRİZDİREK ÖN BİLYA	ROLLER BEARING	75X150X30.5mm		◆	◆
12	K20.01321	0750 115 310		2	PRİZ. MASURA BİLYA	NEEDLE CAGE	93X101X25mm		◆	◆
13	K20.00089	1313 302 036		1	TAKVİYE DİŞLİSİ 34 DİŞ	CONSTANT GEAR 34 T		ABCDEFG	◆	
13	K20.00090	1313 302 035		1	TAKVİYE DİŞLİSİ 30 DİŞ	CONSTANT GEAR 30 T		ABCDEF		◆

NOTES :

ABCDEFG alfabetic letters are used in conjunction with the encoded parts.

(1) This kit includes (1499 298 135) = 2pcs 0730 106 168 + 1pcs 0730 061 816
(2) This kit includes (1499 298 133) = 2pcs 0730 106 166 + 1pcs 0730 061 816
(3) This kit includes (1499 298 131) = 2pcs 0730 106 164 + 1pcs 0730 061 816
(4) This kit includes (1499 298 129) = 2pcs 0730 106 162 + 1pcs 0730 061 816
(5) This kit includes (1499 298 127) = 2pcs 0730 106 160 + 1pcs 0730 061 816
(6) This kit includes (1499 298 125) = 2pcs 0730 106 158 + 1pcs 0730 061 816

NOTLAR :

ABCDEFG alfabetik harfler ile kodlananparçalar birlikte kullanılır.

(1) (1499 298 135) nolu kit bu parçalardan oluşur = 2pcs 0730 106 168 + 1pcs 0730 061 816
(2) (1499 298 133) nolu kit bu parçalardan oluşur = 2pcs 0730 106 166 + 1pcs 0730 061 816
(3) (1499 298 131) nolu kit bu parçalardan oluşur = 2pcs 0730 106 164 + 1pcs 0730 061 816
(4) (1499 298 129) nolu kit bu parçalardan oluşur = 2pcs 0730 106 162 + 1pcs 0730 061 816
(5) (1499 298 127) nolu kit bu parçalardan oluşur = 2pcs 0730 106 160 + 1pcs 0730 061 816
(6) (1499 298 125) nolu kit bu parçalardan oluşur = 2pcs 0730 106 158 + 1pcs 0730 061 816

Original parts names, oem numbers, symbols and descriptions used in this catalogue are for reference purposes only.

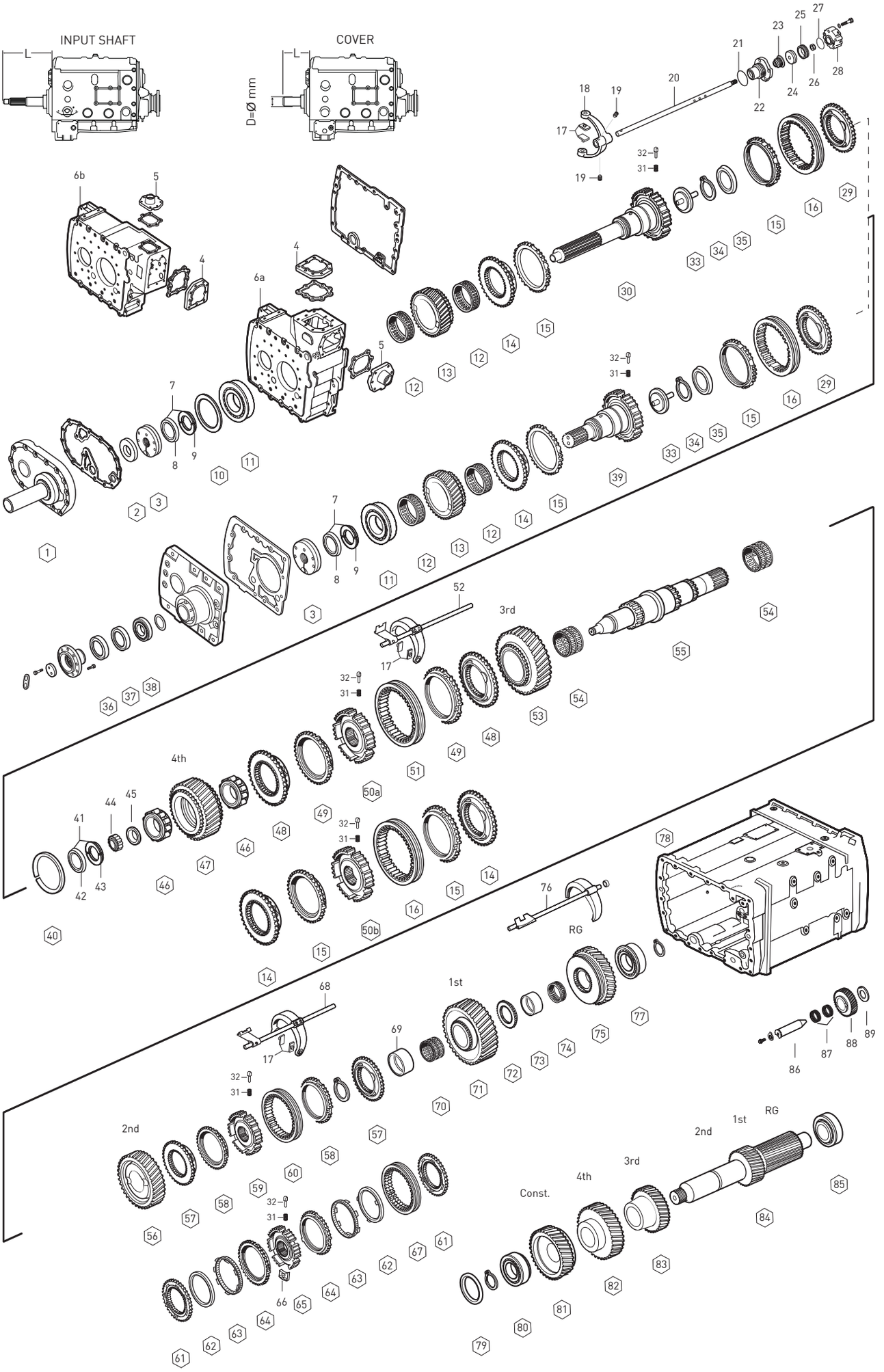

Original parts names, oem numbers, symbols and descriptions used in this catalogue are for reference purposes only.

Fig.	Kacmaz No.	Oem No	Oem Old No	Pcs.	Ürün Tanımı	Description	Sizes	Notes	SG 13.80-0.84	DG 16.47-1.00
14	K20.00101	1312 304 027		1	TAKVİYE SENKROMENÇ	ENGAGING RING			◆	◆
15	K20.00108	1297 304 484	(1297 304 402)	2	TAKVİYE SENK.FRENLEME	SYNCHRONIZING CONE			◆	◆
16	K20.00098	1310 304 202	(1312 302 057)	1	TAKVİYE SENK.HALKA	ENGAGING SLEEVE			◆	◆
			(1310 304 174)							
17	K20.00204	1297 306 120		6	TAKVİYE HİLAL PABUCU	SLIDING PAD			◆	◆
18		1313 312 002		1	TAKVİYE HİLALİ	G.SHIFT FORK			◆	◆
19	K20.01688	1315 312 047		2	TAKVİYE HİLAL VİDASI	SCREW	M12X1.0mm		◆	◆
20		1312 312 002		1	TAKVİYE HİLAL MİLİ	G.SHIFT RAIL			◆	◆
21		0634 313 671		1	TAKVİYE SİLİNDİR ORİNGİ	O-RING	80.0X3.0mm		◆	◆
22	K20.01738	1296 312 042	(1296 312 016)	1	TAKVİYE SİLİNDİR GÖVDESİ	CYLINDER			◆	◆
23	K20.01016	0750 112 034		1	TAKVİYE HİLAL MİL KEÇESİ	FLANGE PACKING	25.0X38.0X14.2mm		◆	◆
24		1312 312 003	(1296 312 056)	1	TAKVİYE HİLAL MİL PİSTONU	PISTON			◆	◆
25	K20.01021	0750 112 089		1	TAKVİYE HAVA KEÇESİ	DOUBLE PACKING	53.0X63.0X16.2mm		◆	◆
26	K20.01774	0737 006 095		1	TAKVİYE HİLAL MİL SOMUNU	NUT	M16X1.5mm		◆	◆
27		0634 314 018		1	TAKVİYE SİLİNDİR ORİNGİ	O-RING	59.0X2.0mm		◆	◆
28		0750 132 032		1	TAKVİYE VENTİLİ	5/2 WAY VALVE			◆	◆
29	K20.00097	1312 304 056		1	TAKVİYE SENKROMENÇ	ENGAGING RING			◆	◆
30	K20.00083	1313 202 013		1	PRİZDİREK	INPUT SHAFT	L=286 SAE 2	A	◆	◆
30	K20.00372	1313 202 014		1	PRİZDİREK	INPUT SHAFT	L=310 SAE 2	B	◆	◆
30	K20.00563	1313 202 015		1	PRİZDİREK	INPUT SHAFT	L=260 SAE 2	C	◆	◆
30	K20.00084	1313 202 016		1	PRİZDİREK	INPUT SHAFT		D	◆	◆
30	K20.00085	1313 221 004		1	PRİZDİREK	INPUT SHAFT	L=367.6 SAE 2	E	◆	◆
30	K20.00520	1313 202 018		1	PRİZDİREK	INPUT SHAFT	L=320 SAE 2	F	◆	◆
31	K20.00110	0732 040 409		9	PRİZ.ve YILDIZ DİŞLİ YAYI	SPRING			◆	◆
32	K20.00111	1297 304 436		9	PRİZ.veYILDIZ DİŞLİ FİŞEĞİ	PRESSURE PIECE			◆	◆
33	K20.01504	1315 302 196		1	PRİZDİREK YAĞ PİPETİ	OIL PIPET			◆	◆
34	K20.01505	0630 502 027		1	PRİZDİREK SEKMANI	RETANING RING	472/50X2mm		◆	◆
35	K20.01011	0501 314 060		1	PRİZDİREK ARKA KEÇE	OIL SEAL			◆	◆
36	K20.01005	0734 300 140		1	PRİZDİREK KEÇESİ	OIL SEAL	70X90X10mm	G	◆	
37	K20.01006	0634 310 648		1	PRİZDİREK KEÇESİ	OIL SEAL	70X90X10mm	G	◆	
38	K20.01131	0750 117 651		1	ŞANZ.KAPAK BİLYASI	ROLLER BEARING	50X90X24.7mm	G	◆	
39	K20.00521	1313 202 019		1	PRİZDİREK (Kısa Tip)	INPUT SHAFT (Short Type)		G	◆	
40	K20.01523	0730 005 468		1	SENKROMENÇ AYAR SEKMANI	RING	4.00mm		◆	◆
40	K20.01524	0730 005 466		1	SENKROMENÇ AYAR SEKMANI	RING	3.60mm		◆	◆
41	K20.01561	1499 298 027		1	EMN.SACI VE P.KİLİT TAK.	SPLIT RING KIT	5.00mm	(7)	◆	◆
41	K20.01563	1499 298 026		1	EMN.SACI VE P.KİLİT TAK.	SPLIT RING KIT	4.90mm	(8)	◆	◆
41	K20.01580	2001580		1	EMN.SACI VE P.KİLİT TAK.	SPLIT RING KIT	4.85mm	(9)	◆	◆
41	K20.01565	1499 298 025		1	EMN.SACI VE P.KİLİT TAK.	SPLIT RING KIT	4.80mm	(10)	◆	◆
41	K20.01567	1499 298 024		1	EMN.SACI VE P.KİLİT TAK.	SPLIT RING KIT	4.70mm	(11)	◆	◆
41	K20.01569	1499 298 023		1	EMN.SACI VE P.KİLİT TAK.	SPLIT RING KIT	4.60mm	(12)	◆	◆
42	K20.01571	0730 062 781		1	P. KİLİT EMNİYET SACI	RETAINING RING			◆	◆

NOTES :

ABCDEFG alfabetic letters are used in conjunction with the encoded parts.

(7) This kit includes (1499 298 027) = 2pcs 0730 107 023 + 1pcs 0730 062 781
(8) This kit includes (1499 298 026) = 2pcs 0730 107 022 + 1pcs 0730 062 781
(9) This kit includes (2001580) = 2pcs 2001581 + 1pcs 0730 062 781
(10) This kit includes (1499 298 025) = 2pcs 0730 107 021 + 1pcs 0730 062 781
(11) This kit includes (1499 298 024) = 2pcs 0730 107 020 + 1pcs 0730 062 781
(12) This kit includes (1499 298 023) = 2pcs 0730 107 019 + 1pcs 0730 062 781

NOTLAR :

ABCDEFG alfabetik harfler ile kodlananparçalar birlikte kullanılır.

(7) (1499 298 027) nolu kit bu parçalardan oluşur = 2pcs 0730 107 023 + 1pcs 0730 062 781
(8) (1499 298 026) nolu kit bu parçalardan oluşur = 2pcs 0730 107 022 + 1pcs 0730 062 781
(9) (2001580) nolu kit bu parçalardan oluşur = 2pcs 2001581 + 1pcs 0730 062 781
(10) (1499 298 025) nolu kit bu parçalardan oluşur = 2pcs 0730 107 021 + 1pcs 0730 062 781
(11) (1499 298 024) nolu kit bu parçalardan oluşur = 2pcs 0730 107 020 + 1pcs 0730 062 781
(12) (1499 298 023) nolu kit bu parçalardan oluşur = 2pcs 0730 107 019 + 1pcs 0730 062 781

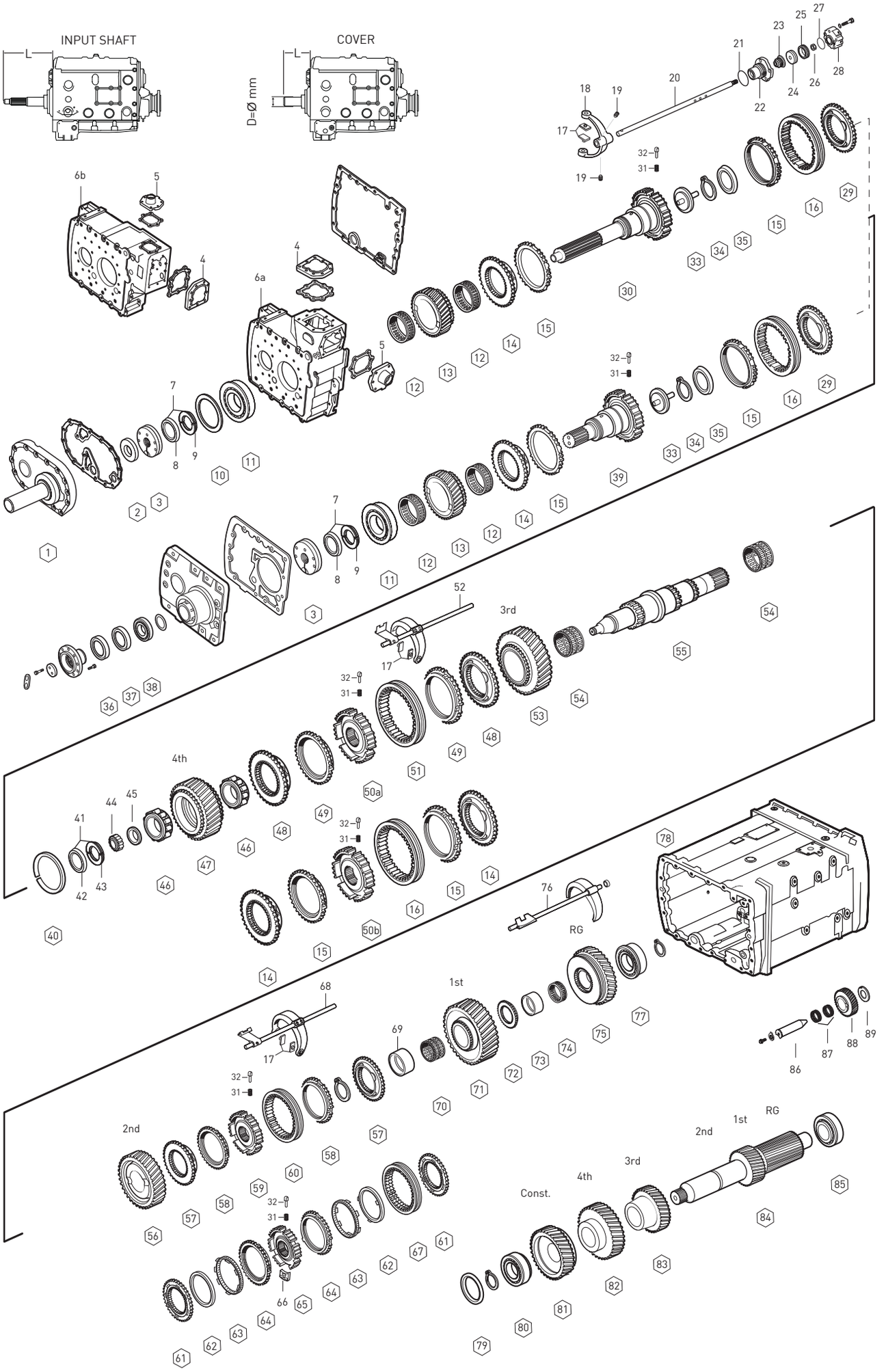

Original parts names, oem numbers, symbols and descriptions used in this catalogue are for reference purposes only.

Fig.	Kacmaz No.	Oem No	Oem Old No	Pcs.	Ürün Tanımı	Description	Sizes	Notes	SG 13.80-0.84	DG 16.47-1.00
43	K20.01562	0730 107 023		2	PARÇALI KİLİT	SPLIT RING	5.00mm		◆	◆
43	K20.01564	0730 107 022		2	PARÇALI KİLİT	SPLIT RING	4.90mm		◆	◆
43	K20.01581	2001581		2	PARÇALI KİLİT	SPLIT RING	4.85mm		◆	◆
43	K20.01566	0730 107 021		2	PARÇALI KİLİT	SPLIT RING	4.80mm		◆	◆
43	K20.01568	0730 107 020		2	PARÇALI KİLİT	SPLIT RING	4.70mm		◆	◆
43	K20.01570	0730 107 019		2	PARÇALI KİLİT	SPLIT RING	4.60mm		◆	◆
44	K20.01109	0750 117 232		1	KAMALI MİL UÇ BİLYA	ROLLER BEARING	42X40.3mm		◆	◆
45	K20.01527	1315 304 048		1	KAMALI MİL UÇ BİLYA PULU	THRUST WASHER	8.00mm		◆	◆
45	K20.01528	1315 304 047		1	KAMALI MİL UÇ BİLYA PULU	THRUST WASHER	7.90mm		◆	◆
45	K20.01529	1315 304 046		1	KAMALI MİL UÇ BİLYA PULU	THRUST WASHER	7.80mm		◆	◆
46	K20.01302	0750 118 198		2	4.VİTES DİŞLİ MAS.BİLYA	NEEDLE CAGE	67X101X32mm		◆	◆
47	K20.00099	1313 304 005		1	4.VİTES DİŞLİSİ 30 DİŞ	GEAR 4th 30 T		ABCDEFG	◆	
47	K20.00100	1296 304 131		1	4.VİTES DİŞLİSİ 34 DİŞ	GEAR 4th 34 T		ABCDEF		◆
48	K20.00102	1316 304 159	(1316 304 145)	2	3./ 4.VİT.SENKROMENÇ	ENGAGING RING			◆	◆
14	K20.00101	1312 304 027		2	3./ 4.VİT.SENKROMENÇ	ENGAGING RING		EF (13)	◆	◆
49	K20.00109	1316 304 168	(1316 304 149)	2	3./ 4.VİT.SENK.FRENLEME	SYNCHRONIZING CONE			◆	◆
15	K20.00108	1297 304 484	(1297 304 402)	2	3./ 4.VİT.SENK.FRENLEME	SYNCHRONIZING CONE		EF (13)	◆	◆
50a	K20.00136	1316 304 162		1	3./ 4.VİT.YILDIZ DİŞLİ	GUIDE SLEEVE			◆	◆
50b	K20.00181	1312 304 052		1	3./ 4.VİT.YILDIZ DİŞLİ	GUIDE SLEEVE		EF (13)	◆	◆
51	K20.00103	1316 304 167	(1315 304 135)	1	3./ 4.VİT.SENK.HALKA	ENGAGING SLEEVE			◆	◆
16	K20.00098	1310 304 202	(1312 302 057)	1	3./ 4.VİT.SENK.HALKA	ENGAGING SLEEVE		EF (13)	◆	◆
			(1310 304 174)							
52		1313 206 002		1	3./4.VİTES HİLALİ	GEAR SHIT FORK 3rd/4th		ADF	◆	
52		1313 206 011		1	3./4.VİTES HİLALİ	GEAR SHIT FORK 3rd/4th		C	◆	
52		1313 206 005		1	3./4.VİTES HİLALİ	GEAR SHIT FORK 3rd/4th		BE		◆
53	K20.00104	1313 304 080		1	3.VİTES DİŞLİSİ 32 DİŞ	GEAR 3rd 32 T		ABCDEFG	◆	
53	K20.00105	1313 304 081		1	3.VİTES DİŞLİSİ 34 DİŞ	GEAR 3rd 34 T		ABCDEF		◆
54	K20.01322	0735 321 087	(0750 115 584)	2	2./3.VİT.MASURA BİLYA	NEEDLE CAGE	92X100X53mm		◆	◆
55	K20.00373	1315 304 130	(1313 304 072)	1	KAMALI MİL	MAIN SHAFT			◆	◆
56	K20.00106	1313 304 078		1	2.VİTES DİŞLİSİ 37 DİŞ	GEAR 2nd 37 T		ABCDEFG	◆	
56	K20.00107	1313 304 077		1	2.VİTES DİŞLİSİ 38 DİŞ	GEAR 2nd 38 T		ABCDEF		◆
57a	K20.00183	1316 304 156		2	1./ 2.VİT.SENKROMENÇ	ENGAGING RING			◆	◆
57b	K20.00182	1313 304 009		2	1./ 2.VİT.SENKROMENÇ	ENGAGING RING		F (14)	◆	◆
58a	K20.00113	1316 304 170	(1316 304 150)	2	1./ 2.VİT.SENK.FRENLEME	SYNCHRONIZING CONE			◆	◆
58b	K20.00112	1297 304 485	(1297 304 401)	2	1./ 2.VİT.SENK.FRENLEME	SYNCHRONIZING CONE		F (14)	◆	◆
59a	K20.00180	1316 304 163		1	1./ 2.VİT.YILDIZ DİŞLİ	GUIDE SLEEVE			◆	◆
59b	K20.00179	1313 304 008		1	1./ 2.VİT.YILDIZ DİŞLİ	GUIDE SLEEVE		F (14)	◆	◆
60a	K20.00114	1316 304 169	(1315 304 136)	1	1./ 2.VİT.SENK.HALKA	ENGAGING SLEEVE			◆	◆
60b	K20.00115	1316 304 078		1	1./ 2.VİT.SENK.HALKA	ENGAGING SLEEVE		F (14)	◆	◆
61	K20.00143	1312 304 106		2	1./ 2.VİT.SENKROMENÇ	ENGAGING RING		E (15)	◆	◆
62	K20.00144	1268 304 424		2	1./ 2.VİT.SENK.FRENLEME	SYNCHRONIZING CONE		E (15)	◆	◆

NOTES :

ABCDEFG alfabetic letters are used in conjunction with the encoded parts.

(13) SYNCHRONIZER KIT ASSY.3rd/4th (1315 298 018) is for the version of DAF 16.47-1.00 and LEYLAND 13.80-0.84/16.47-1.00

(14) SYNCHRONIZER KIT ASSY.1st/2nd (1313 298 909) is for the version of LEYLAND 13.80-0.84 / 16.47-1.00 version

(15) SYNCHRONIZER KIT ASSY.1st/2nd (1312 298 911) is for the version of DAF 16.47-1.00
The kit number (1312 298 911) is an alternatif for synchronizing kits 1313 298 909 and 1315 298 060

NOTLAR :

ABCDEFG alfabetik harfler ile kodlananparçalar birlikte kullanılır.

(13) (1315 298 018) 3./4.vites senkromenç kit, DAF 16.47-1.00 ve LEYLAND 13.80-0.84 / 16.47-1.00 sürümü için kullanılmıştır.

(14) (1313 298 909) 1./2.vites senkromenç kit, LEYLAND 13.80-0.84 / 16.47-1.00 sürümü için kullanılmıştır.

(15) (1312 298 911) 1./2.vites senkromenç kit, DAF 16.47-1.00 sürümü için kullanılmıştır.
(1312 298 911) numaralı kit, 1313 298 909 ve 1315 298 060 numaraları senkromenç kitler için, alternatif olarak kullanılabilir.

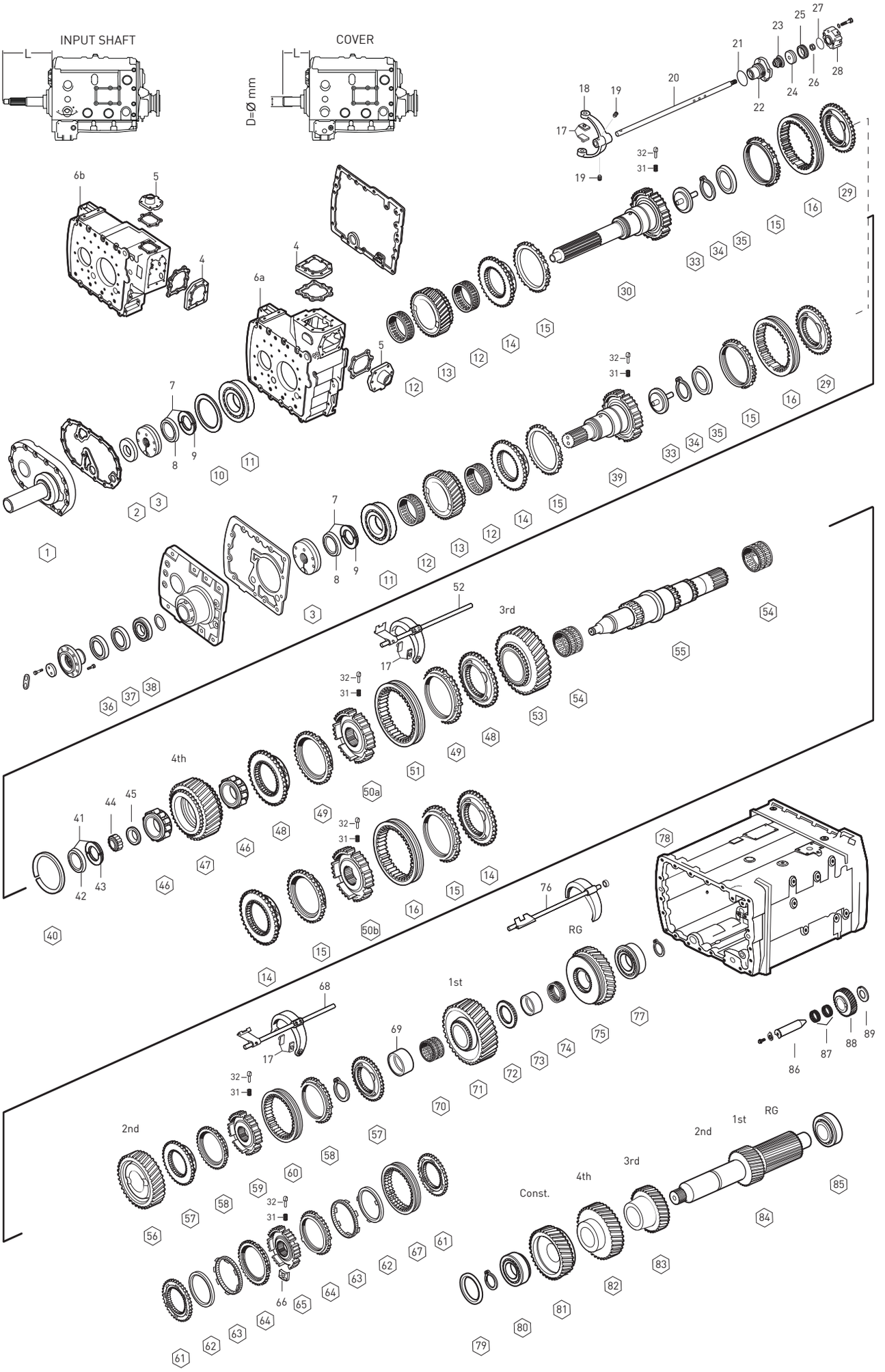

Original parts names, oem numbers, symbols and descriptions used in this catalogue are for reference purposes only.

Fig.	Kacmaz No.	Oem No	Oem Old No	Pcs.	Ürün Tanımı	Description	Sizes	Notes	SG 13.80-0.84	DG 16.47-1.00
63	K20.00302	1268 304 494	(1268 304 491)	2	1./ 2.VİT.SENK.FRENLEME	INTERMEDIATE CONE		E (15)	◆	◆
64	K20.00145	1268 304 525		2	1./ 2.VİT.SENK.FRENLEME	SYNCHRONIZING CONE		E (15)	◆	◆
65	K20.00146	1312 304 158		1	1./ 2.VİT.YILDIZ DİŞLİ	GUIDE SLEEVE		E (15)	◆	◆
66	K20.00209	1312 304 159		3	1./ 2.VİT.YILDIZ DİŞ.BAKLASI	SLIDING BLOCK		E (15)	◆	◆
67	K20.00147	1310 304 175	(1312 304 157)	1	1./ 2.VİT.SENK.HALKA	ENGAGING SLEEVE		E (15)	◆	◆
68		1313 206 001	(1313 206 007)	1	1./2.VİTES HİLALİ	GEAR SHIT FORK 1st/2nd		ADF	◆	
68		1313 206 031	(1313 206 012)	1	1./2.VİTES HİLALİ	GEAR SHIT FORK 1st/2nd		C	◆	
68		1313 206 004	(1313 206 008)	1	1./2.VİTES HİLALİ	GEAR SHIT FORK 1st/2nd		BE		◆
69	K20.00374	1313 304 038		1	1.VİTES MAS.BİLYA ÇANAĞI	BEARING RACE			◆	◆
70	K20.01323	0750 115 325		1	1.VİTES MASURA BİLYA	NEEDLE CAGE	96X104X55mm		◆	◆
71	K20.00375	1313 304 039		1	1.VİTES DİŞLİSİ 44 DİŞ	GEAR 1st 44 T		ABCDEFG	◆	
71	K20.00376	1313 304 070	(1313 304 040)	1	1.VİTES DİŞLİSİ	GEAR 1st		ABCDEF		◆
72	K20.00377	1313 304 037		1	GERİ VİTES YILDIZ DİŞLİ	HUB			◆	◆
73	K20.00378	1315 304 132	(1313 304 036)	1	GERİ VİT.MAS.BİL.ÇANAĞI	BEARING RACE			◆	◆
74	K20.01324	0750 115 324		1	GERİ VİTES MASURA BİLYA	NEEDLE CAGE	90X98X41mm		◆	◆
75	K20.00380	1313 304 042		1	GERİ VİTES DİŞLİSİ 39 DİŞ	REVERSE GEAR 39 T		ABCDEFG	◆	
75	K20.00379	1313 304 041		1	GERİ VİTES DİŞLİSİ 38 DİŞ	REVERSE GEAR 38 T		ABCDEF		◆
76		1313 206 015	(1313 206 013)	1	GERİ VİTES HİLALİ	GEAR SHIT FORK/RG		ADF	◆	
76		1313 206 026	(1313 206 010)	1	GERİ VİTES HİLALİ	GEAR SHIT FORK/RG		C	◆	
76		1313 206 016	(1313 206 014)	1	GERİ VİTES HİLALİ	GEAR SHIT FORK/RG		BE		◆
77	K20.01119	0750 117 677		1	KAMALI MİL ARKA BİLYA	ROLLER BEARING	80X130X36mm		◆	◆
78		1313 301 071	(1313 301 024)	1	ŞANZIMAN ORTA GÖVDE	HOUSING		ABDE	◆	◆
78		1313 301 072	(1313 301 023)	1	ŞANZIMAN ORTA GÖVDE	HOUSING		C	◆	
78		1313 301 073	(1313 301 025)	1	ŞANZIMAN ORTA GÖVDE	HOUSING		CDEF	◆	◆
79	K20.01648	0730 102 099		1	GRUP MİLİ ÖN BİLYA RAYNELİ	SHIM	3.00mm		◆	◆
79	K20.01649	0730 102 060		1	GRUP MİLİ ÖN BİLYA RAYNELİ	SHIM	2.60mm		◆	◆
79	K20.01650	0730 102 068		1	GRUP MİLİ ÖN BİLYA RAYNELİ	SHIM	2.20mm		◆	◆
79	K20.01651	0730 102 075		1	GRUP MİLİ ÖN BİLYA RAYNELİ	SHIM	1.85mm		◆	◆
79	K20.01652	2001652		1	GRUP MİLİ ÖN BİLYA RAYNELİ	SHIM	0.30mm		◆	◆
79	K20.01653	2001653		1	GRUP MİLİ ÖN BİLYA RAYNELİ	SHIM	0.20mm		◆	◆
79	K20.01654	2001654		1	GRUP MİLİ ÖN BİLYA RAYNELİ	SHIM	0.10mm		◆	◆
80	K20.01124	0750 117 010	(0750 117 030)	1	GRUP MİLİ ÖN BİLYA	ROLLER BEARING	50.8X100X35mm		◆	◆
81	K20.00091	1313 303 004		1	OVARD.DİŞLİ KARŞ.37 DİŞ	CONSTANT GEAR 37 T		ABCDEFG	◆	
81	K20.00092	1296 303 037		1	OVARD.DİŞLİ KARŞ.39 DİŞ	CONSTANT GEAR 39 T		ABCDEF		◆
82	K20.00093	1313 303 003		1	4.VİTES DİŞLİ KARŞ.39 DİŞ	GEAR 4th 39 T		ABCDEFG	◆	
82	K20.00094	1296 303 036		1	4.VİTES DİŞLİ KARŞ.37 DİŞ	GEAR 4th 37 T		ABCDEF		◆
83	K20.00095	1313 303 002		1	3.VİTES DİŞLİ KARŞ.28 DİŞ	GEAR 3rd 28 T		ABCDEFG	◆	
83	K20.00096	1296 303 035		1	3.VİTES DİŞLİ KARŞ.26 DİŞ	GEAR 3rd 26 T		ABCDEF		◆
84	K20.00381	1313 303 010		1	GRUP MİLİ 19-23 DİŞ	COUNTER SHAFT 19-23 T		ABCDEFG	◆	
84	K20.00382	1313 303 011		1	GRUP MİLİ 17-20 DİŞ	COUNTER SHAFT 17-20 T		ABCDEF		◆
85	K20.01127	0750 117 011		1	GRUP MİLİ ARKA BİLYA	ROLLER BEARING	50.8X104.7X39.6mm		◆	◆

NOTES :

ABCDEFG alfabetic letters are used in conjunction with the encoded parts.

(15) SYNCHRONIZER KIT ASSY.1st/2nd (1312 298 911) is for the version of DAF 16.47-1.00
The kit number (1312 298 911) is an alternatif for synchronizing kits 1313 298 909 and 1315 298 060

NOTLAR :

ABCDEFG alfabetik harfler ile kodlananparçalar birlikte kullanılır.

(15) (1312 298 911) 1./2.vites senkromenç kit, DAF 16.47-1.00 sürümü için kullanılmıştır.
(1312 298 911) numaralı kit, 1313 298 909 ve 1315 298 060 numaraları senkromenç kitler için, alternatif olarak kullanılabilir.

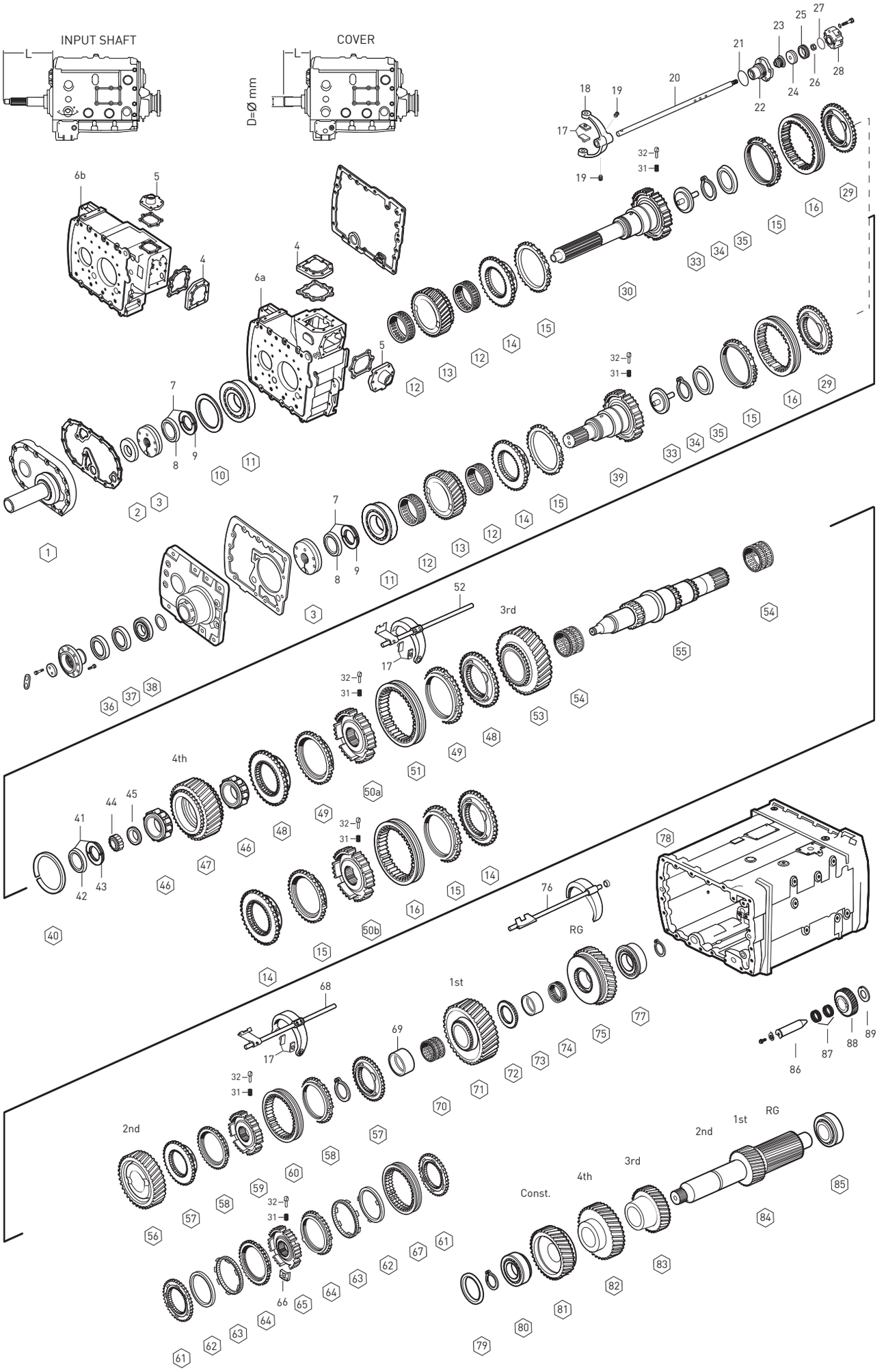

Original parts names, oem numbers, symbols and descriptions used in this catalogue are for reference purposes only.

Fig.	Kacmaz No.	Oem No	Oem Old No	Pcs.	Ürün Tanımı	Description	Sizes	Notes	SG 13.80-0.84	DG 16.47-1.00
86	K20.00598	1295 305 056	(1295 305 008)	1	KÜÇÜK GERİ VİTES PİMİ	PIN			◆	◆
			(1295 305 057)							
87	K20.01335	0750 115 011	(0735 320 042)	2	KÜÇÜK GERİ VİT.MAS.BİLYA	NEEDLE CAGE	40.0X60.0X26.0mm		◆	◆
88	K20.00621	1313 305 002		1	KÜÇÜK GERİ VİTES	REV.IDLER GEAR			◆	
88	K20.00622	1313 305 001		1	KÜÇÜK GERİ VİTES	REV.IDLER GEAR				◆
89	K20.01655	0730 150 064		1	KÜÇÜK GERİ VİTES PULU	THRUST WASHER			◆	◆

NOTES :

ABCDEFG alfabetic letters are used in conjunction with the encoded parts.

NOTLAR :

ABCDEFG alfabetik harfler ile kodlananparçalar birlikte kullanılır.

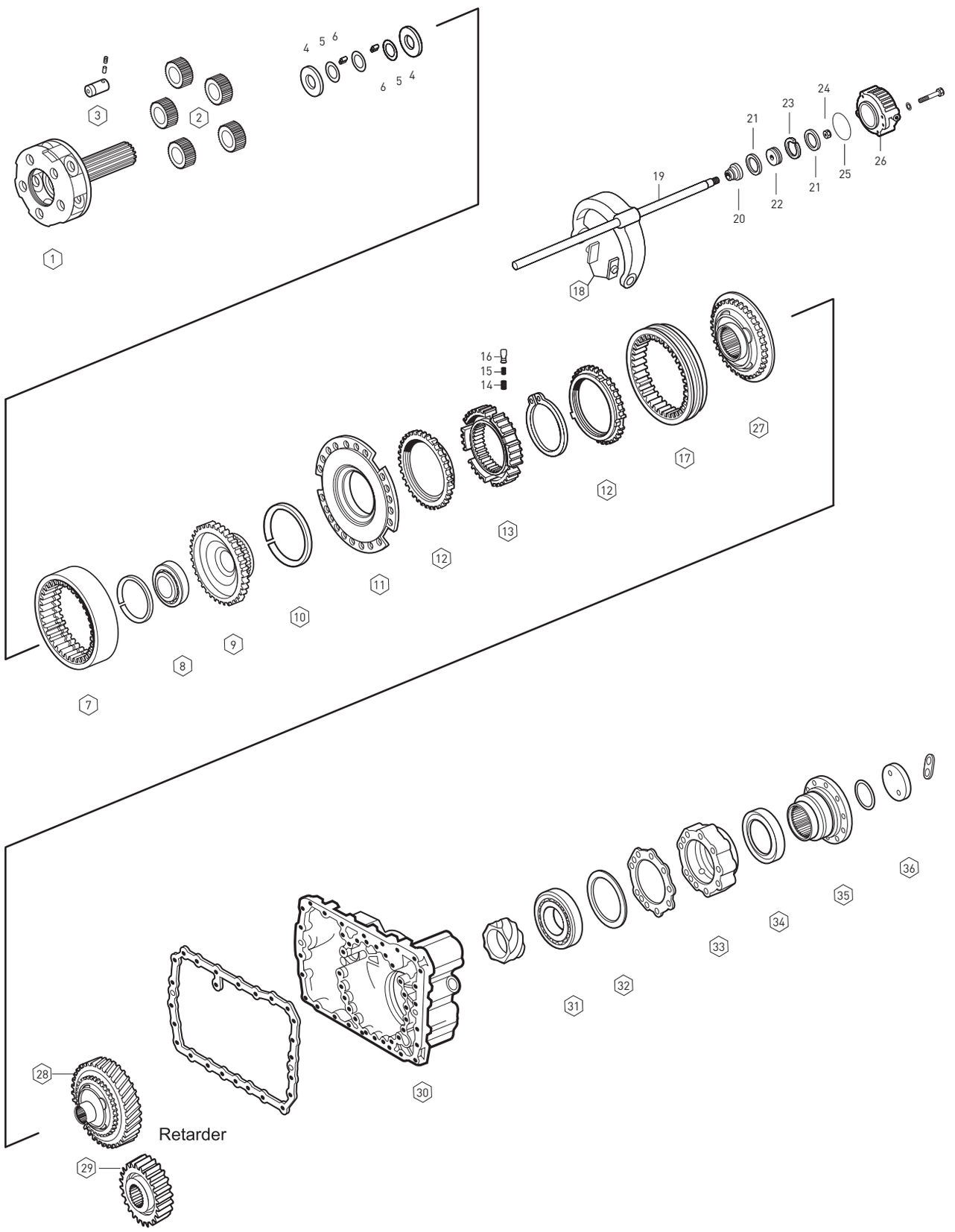

Original parts names, oem numbers, symbols and descriptions used in this catalogue are for reference purposes only.

Fig.	Kacmaz No.	Oem No	Oem Old No	Pcs.	Ürün Tanımı	Description	Sizes	Notes	SG 13.80-0.84	DG 16.47-1.00
1	K20.00623	1315 232 023		1	ŞANZIMAN HEYKELİ	PLANETARY CARRIER			◆	◆
2	K20.00086	1313 232 003		5	HEYKEL KOZA DİŞLİ TAKIMI	PLANETARY GEAR SET			◆	◆
3	K20.00384	1296 332 005		5	HEYKEL KOZA DİŞLİ PİMİ	PLANET SHAFT			◆	◆
4	K20.01513	0501 308 981		10	HEYKEL KOZA DİŞLİ PULU	THRUST WASHER			◆	◆
5	K20.01514	0730 107 168		15	HEYKEL KOZA DİŞLİ PULU	THRUST WASHER			◆	◆
6	K20.01455	0735 470 164		140	HEYK.KOZA DİŞ.TANE BİLYA	NEEDLE ROLLER	10X15mm		◆	◆
7	K20.00605	1295 332 086		1	ÇEMBER DİŞLİ 86 DİŞ	RING WHEEL 86 T			◆	◆
8	K20.01133	0750 116 165	(0635 338 049)	1	PLANET ÇAN DİŞLİ BİLYASI	ROLLER BEARING	80X110X16mm		◆	◆
9	K20.00624	1313 332 020		1	PLANET ÇAN DİŞLİ 86 DİŞ	CARRIER HUB 86 T			◆	◆
10	K20.01656	0730 505 056	(0730 505 055)	1	ÇEMBER DİŞLİ SEGMANI	SPRING RING	3.20mm		◆	◆
11	K20.00007	1296 233 006		1	TEPSİ SENKROMENÇ	FLANGE			◆	◆
12	K20.00038	1296 333 045	(1296 333 022)	2	AĞIR SERİ SENK.FRENLEME	SYNCHRONIZING CONE			◆	◆
13	K20.00185	1313 333 001		1	AĞIR SERİ YILDIZ DİŞLİ	GUIDE SLEEVE			◆	◆
14	K20.00469	0732 040 385		9	AĞIR SERİ YILDIZ DİŞLİ YAYI	SPRING			◆	◆
15	K20.00470	0732 040 386		9	AĞIR SERİ YILDIZ DİŞLİ YAYI	SPRING			◆	◆
16	K20.00471	1240 304 278		9	AĞIR SERİ YILDIZ DİŞLİ FİŞEĞİ	PRESSURE PIECE			◆	◆
17	K20.00039	1296 333 023	(0769 186 286)	1	AĞIR SERİ SENK.HALKA	ENGAGING SLEEVE			◆	◆
18	K20.00341	1296 334 004		2	AĞIR SERİ HİLAL PABUCU	SLIDING PAD			◆	◆
19		1313 234 011		1	AĞIR SERİ HİLALİ	GEAR SHIFT FORK			◆	◆
20	K20.01016	0750 112 034		1	AĞIR SERİ HİLAL MİL KEÇESİ	FLANGE PACKING	25.0X38.0X14.2mm		◆	◆
21	K20.01024	0734 317 150	(0750 112 019)	2	AĞIR SERİ HAVA KEÇESİ	SEALING RING	80.0X90.0X4.8mm		◆	◆
22		1296 334 039		1	AĞIR SERİ HİLAL MİL PİSTONU	PISTON			◆	◆
23	K20.01657	0750 112 066		1	AĞIR SERİ HİLAL MİL FİBERİ	GUIDE RING			◆	◆
24	K20.01774	0737 006 095		1	AĞIR SERİ HİLAL MİL SOMUNU	NUT	M16X1.5mm		◆	◆
25		0634 314 019		1	AĞIR SERİ SİLİNDİR ORİNGİ	O-RING	94.0X3.0mm		◆	◆
26	K20.00845	1295 334 075		1	AĞIR SERİ SİLİNDİR GÖVDESİ	CYLINDER			◆	◆
27	K20.00006	1313 233 001	(1297 233 018)	1	SERİ SENKROMENÇ	ENGAGING RING	38spl.		◆	◆
28	K20.00386	1297 333 118		1	AĞIR SERİ SENKROMENÇ	ENGAGING RING	Retarder		◆	◆
29	K20.00609	1297 313 231		1	RETARDER DİŞLİSİ	GEAR	Retarder		◆	◆
30		1296 301 129		1	ŞANZIMAN ARKA GÖVDE	HOUSING			◆	◆
30		1296 301 133		1	ŞANZIMAN ARKA GÖVDE	HOUSING				◆
30		1296 301 180		1	ŞANZIMAN ARKA GÖVDE	HOUSING			◆	
30		1313 301 008		1	ŞANZIMAN ARKA GÖVDE	HOUSING				◆
30		1313 301 009		1	ŞANZIMAN ARKA GÖVDE	HOUSING				◆
30		1313 301 011		1	ŞANZIMAN ARKA GÖVDE	HOUSING			◆	
31	K20.01134	0750 116 394	(0750 116 002)	1	ŞANZIMAN ARKA BİLYA	ROLLER BEARING	90X160X30mm		◆	◆
32	K20.01658	0730 100 115		1	ŞANZ.ARKA BİLYA RAYNELİ	SHIM	0.30mm		◆	◆
32	K20.01659	0730 100 116		1	ŞANZ.ARKA BİLYA RAYNELİ	SHIM	0.20mm		◆	◆
32	K20.01660	2001660		1	ŞANZ.ARKA BİLYA RAYNELİ	SHIM	0.10mm		◆	◆
33		1315 231 002	(1296 301 140)	1	ŞANZ.ARKA BİLYA KAPAĞI	BEARING COVER			◆	◆
34	K20.01013	0750 111 341		1	ŞANZ.ARKA KAPAK KEÇESİ	OIL SEAL	105X130X12mm		◆	◆
35	K20.00404	1313 338 002		1	ŞANZIMAN FLANŞI	COMPANION FLANGE	4-H, Ø180mm		◆	◆
35	K20.00530	1313 315 001		1	ŞANZIMAN FLANŞI	COMPANION FLANGE	4-H, Ø180mm		◆	
35	K20.00531	1313 338 007		1	ŞANZIMAN FLANŞI	COMPANION FLANGE	10-H, Ø180mm		◆	◆
35	K20.00405	1313 338 011		1	ŞANZIMAN FLANŞI	COMPANION FLANGE	12-H, Ø204mm		◆	
36	K20.01661	1295 332 051		1	ŞANZIMAN FLANŞ PULU	WASHER			◆	◆

NOTES :

NOTLAR :

SYNCHRONIZER KIT CONST.

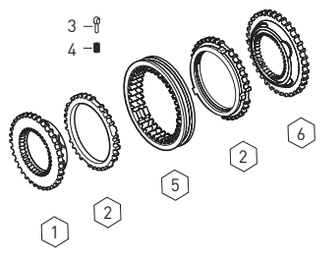

Fig.	Kacmaz No.	Oem No	Oem Old No	Pcs.	Ürün Tanımı	Description
	K20.00522	1297 298 955		Kit	TAKVİYE SENKROMENÇ KİT	SYNCHRONIZER KIT Const
1	K20.00101	1312 304 027		1	TAKVİYE SENKROMENÇ	ENGAGING RING
2	K20.00108	1297 304 484	(1297 304 402)	2	TAKVİYE SENK.FRENLEME	SYNCHRONIZING CONE
3	K20.00111	1297 304 436		3	PRİZ.YILDIZ DİŞLİ FİŞEĞİ	PRESSURE PIECE
4	K20.00110	0732 040 409		3	PRİZ.YILDIZ DİŞLİ YAYI	SPRING
5	K20.00098	1310 304 202	(1312 302 057)	1	TAKVİYE SENK.HALKA	ENGAGING SLEEVE
			(1310 304 174)			
6	K20.00097	1312 304 056		1	TAKVİYE SENKROMENÇ	ENGAGING RING

SYNCHRONIZER KIT 3rd/4th/CONST.

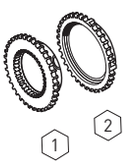

Fig.	Kacmaz No.	Oem No	Oem Old No	Pcs.	Ürün Tanımı	Description
	K20.00523	1312 204 031		Kit	TAK.3./4.VİT.SENK.KİT	SYNCH.KIT 3rd/4th/Const.
1	K20.00101	1312 304 027		1	TAK.3./4.VİT.SENKROMENÇ	ENGAGING RING
2	K20.00108	1297 304 484	(1297 304 402)	1	TAK.3./4.VİT.FRENLEME	SYNCHRONIZING CONE

SYNCHRONIZER KIT 3rd/4th

Fig.	Kacmaz No.	Oem No	Oem Old No	Pcs.	Ürün Tanımı	Description
	K20.00525	1312 204 028		Kit	3./4.VİT.HALKA YILDIZ KİTİ	SYNCH.KIT 3rd/4th
1	K20.00181	1312 304 052		1	3./4.VİT.YILDIZ DİŞLİ	GUIDE SLEEVE
2	K20.00111	1297 304 436		3	PRİZ.YILDIZ DİŞLİ FİŞEĞİ	PRESSURE PIECE
3	K20.00110	0732 040 409		3	PRİZ.YILDIZ DİŞLİ YAYI	SPRING
4	K20.00098	1310 304 202	(1312 302 057)	1	TAKVİYE SENK.HALKA	ENGAGING SLEEVE
			(1310 304 174)			

SYNCHRONIZER KIT 3rd/4th

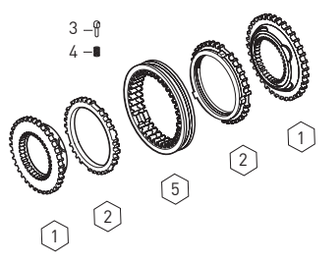

Fig.	Kacmaz No.	Oem No	Oem Old No	Pcs.	Ürün Tanımı	Description
	K20.00524	1315 298 030		Kit	3./4.VİT.SENKROMENÇ KİT	SYNCH.KIT 3rd/4th
1	K20.00101	1312 304 027		2	3./4.VİT.SENKROMENÇ	ENGAGING RING
2	K20.00108	1297 304 484	(1297 304 402)	2	3./4.VİT.SENK.FRENLEME	SYNCHRONIZING CONE
3	K20.00111	1297 304 436		3	PRİZ.YILDIZ DİŞLİ FİŞEĞİ	PRESSURE PIECE
4	K20.00110	0732 040 409		3	PRİZ.YILDIZ DİŞLİ YAYI	SPRING
5	K20.00098	1310 304 202	(1312 302 057)	1	3./4.VİT.SENK.HALKA	ENGAGING SLEEVE
			(1310 304 174)			

SYNCHRONIZER KIT 3rd/4th

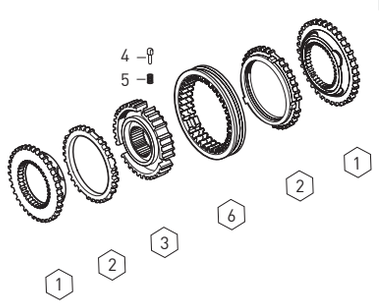

Fig.	Kacmaz No.	Oem No	Oem Old No	Pcs.	Ürün Tanımı	Description
	K20.00383	1315 298 018		Kit	3./4.VİT.SENKROMENÇ KİT	SYNCH.KIT 3rd/4th
1	K20.00101	1312 304 027		2	3./4.VİT.SENKROMENÇ	ENGAGING RING
2	K20.00108	1297 304 484	(1297 304 402)	2	3./4.VİT.SENK.FRENLEME	SYNCHRONIZING CONE
3	K20.00181	1312 304 052		1	3./4.VİT.YILDIZ DİŞLİ	GUIDE SLEEVE
4	K20.00111	1297 304 436		3	PRİZ.YILDIZ DİŞLİ FİŞEĞİ	PRESSURE PIECE
5	K20.00110	0732 040 409		3	PRİZ.YILDIZ DİŞLİ YAYI	SPRING
6	K20.00098	1310 304 202	(1312 302 057)	1	3./4.VİT.SENK.HALKA	ENGAGING SLEEVE
			(1310 304 174)			

Original parts names, oem numbers, symbols and descriptions used in this catalogue are for reference purposes only.

Fig.	Kacmaz No.	Oem No	Oem Old No	Pcs.	Ürün Tanımı	Description
	K20.00088	1315 298 061		Kit	3./4.VİT.SENKROMENÇ KİT	SYNCH.KIT 3rd/4th
1	K20.00102	1316 304 159	(1316 304 145)	2	3./4.VİT.SENKROMENÇ	ENGAGING RING
2	K20.00109	1316 304 168	(1316 304 149)	2	3./4.VİT.SENK.FRENLEME	SYNCHRONIZING CONE
3	K20.00136	1316 304 162		1	3./4.VİT.YILDIZ DİŞLİ	GUIDE SLEEVE
4	K20.00111	1297 304 436		3	PRİZ.YILDIZ DİŞLİ FİŞEĞİ	PRESSURE PIECE
5	K20.00110	0732 040 409		3	PRİZ.YILDIZ DİŞLİ YAYI	SPRING
6	K20.00103	1316 304 167	(1315 304 135)	1	3./4.VİT.SENK.HALKA	ENGAGING SLEEVE

SYNCHRONIZER KIT 3rd/4th

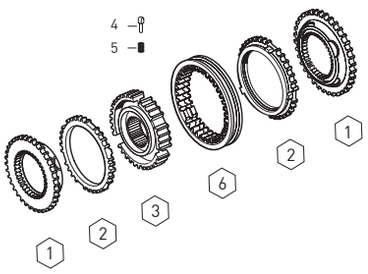

Fig.	Kacmaz No.	Oem No	Oem Old No	Pcs.	Ürün Tanımı	Description
	K20.00794	1316 204 016	(1316 204 014)	Kit	3./4.VİT.FRENLEME KİTİ	SYNCH.KIT 3rd/4th
1	K20.00109	1316 304 168	(1316 304 149)	2	3./4.VİT.SENK.FRENLEME	SYNCHRONIZING CONE
2	K20.00136	1316 304 162		1	3./4.VİT.YILDIZ DİŞLİ	GUIDE SLEEVE
3	K20.00111	1297 304 436		3	PRİZ.YILDIZ DİŞLİ FİŞEĞİ	PRESSURE PIECE
4	K20.00110	0732 040 409		3	PRİZ.YILDIZ DİŞLİ YAYI	SPRING
5	K20.00103	1316 304 167	(1315 304 135)	1	TAKVİYE SENK.HALKA	ENGAGING SLEEVE

SYNCHRONIZER KIT 3rd/4th

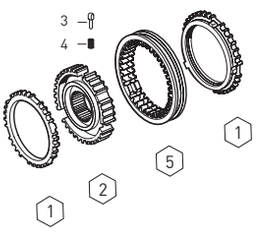

Fig.	Kacmaz No.	Oem No	Oem Old No	Pcs.	Ürün Tanımı	Description
	K20.00529	1313 204 009		Kit	1./2.VİT.SENKROMENÇ KİT	SYNCH.KIT 1st/2nd
1	K20.00182	1313 304 009		1	1./2.VİT.SENKROMENÇ	ENGAGING RING
2	K20.00112	1297 304 485	(1297 304 401)	1	1./2.VİT.SENK.FRENLEME	SYNCHRONIZING CONE

SYNCHRONIZER KIT 1st/2nd

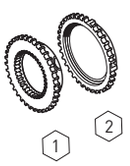

Fig.	Kacmaz No.	Oem No	Oem Old No	Pcs.	Ürün Tanımı	Description
	K20.00528	1313 204 008		Kit	1./2.VİT.HALKA YILDIZ KİTİ	SYNCH.KIT 1st/2nd
1	K20.00179	1313 304 008		1	1./2.VİT.YILDIZ DİŞLİ	GUIDE SLEEVE
2	K20.00111	1297 304 436		3	1./2.VİT.YILDIZ DİŞLİ FİŞEĞİ	PRESSURE PIECE
3	K20.00110	0732 040 409		3	1./2.VİT.YILDIZ DİŞLİ YAYI	SPRING
4	K20.00115	1316 304 078		1	1./2.VİT.SENK.HALKA	ENGAGING SLEEVE

SYNCHRONIZER KIT 1st/2nd

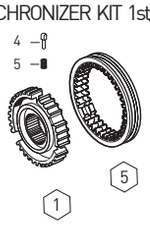

Fig.	Kacmaz No.	Oem No	Oem Old No	Pcs.	Ürün Tanımı	Description
	K20.00526	1313 204 003		Kit	1./2.VİT.SENKROMENÇ KİT	SYNCH.KIT 1st/2nd
1	K20.00112	1297 304 485	(1297 304 401)	2	1./2.VİT.FRENLEME	SYNCH.CONE
2	K20.00179	1313 304 008		1	1./2.VİT.YILDIZ DİŞLİ	GUIDE SLEEVE
3	K20.00111	1297 304 436		3	1./2.VİT.YILDIZ DİŞLİ FİŞEĞİ	PRESSURE PIECE
4	K20.00110	0732 040 409		3	1./2.VİT.YILDIZ DİŞLİ YAYI	SPRING
5	K20.00115	1316 304 078		1	1./2.VİT.SENK.HALKA	ENGAGING SLEEVE

SYNCHRONIZER KIT 1st/2nd

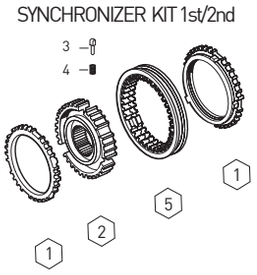

Original parts names, oem numbers, symbols and descriptions used in this catalogue are for reference purposes only.

SYNCHRONIZER KIT 1st/2nd

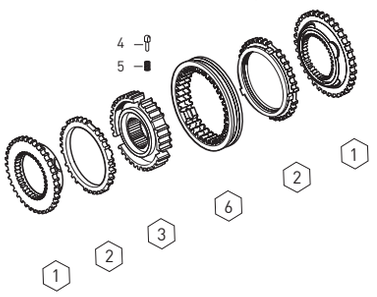

Fig.	Kacmaz No.	Oem No	Oem Old No	Pcs.	Ürün Tanımı	Description
	K20.00527	1313 298 909		Kit	1./2.VİT.SENKROMENÇ KİT	SYNCH.KIT 1st/2nd
1	K20.00182	1313 304 009		2	1./2.VİT.SENKROMENÇ	ENGAGING RING
2	K20.00112	1297 304 485	(1297 304 401)	2	1./2.VİT.FRENLEME	SYNCH.CONE
3	K20.00179	1313 304 008		1	1./2.VİT.YILDIZ DİŞLİ	GUIDE SLEEVE
4	K20.00111	1297 304 436		3	1./2.VİT.YILDIZ DİŞLİ FİŞEĞİ	PRESSURE PIECE
5	K20.00110	0732 040 409		3	1./2.VİT.YILDIZ DİŞLİ YAYI	SPRING
6	K20.00115	1316 304 078		1	1./2.VİT.SENK.HALKA	ENGAGING SLEEVE

SYNCHRONIZER KIT 1st/2nd

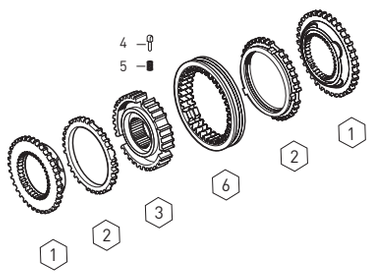

Fig.	Kacmaz No.	Oem No	Oem Old No	Pcs.	Ürün Tanımı	Description
	K20.00087	1315 298 060	(1316 204 017)	Kit	1./2.VİT.SENKROMENÇ KİT	SYNCH.KIT 1st/2nd
1	K20.00183	1316 304 156		2	1./2.VİT.SENKROMENÇ	ENGAGING RING
2	K20.00113	1316 304 170	(1316 304 150)	2	1./2.VİT.FRENLEME	SYNCH.CONE
3	K20.00180	1316 304 163		1	1./2.VİT.YILDIZ DİŞLİ	GUIDE SLEEVE
4	K20.00111	1297 304 436		3	1./2.VİT.YILDIZ DİŞLİ FİŞEĞİ	PRESSURE PIECE
5	K20.00110	0732 040 409		3	1./2.VİT.YILDIZ DİŞLİ YAYI	SPRING
6	K20.00114	1316 304 169	(1315 304 136)	1	1./2.VİT.SENK.HALKA	ENGAGING SLEEVE

SYNCHRONIZER KIT 1st/2nd

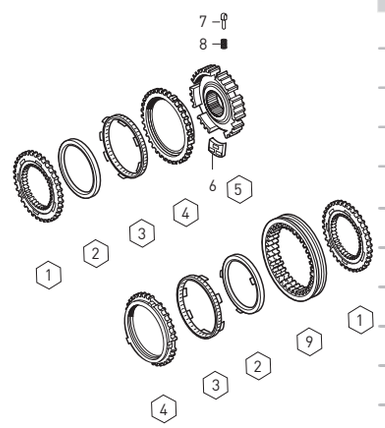

Fig.	Kacmaz No.	Oem No	Oem Old No	Pcs.	Ürün Tanımı	Description
	K20.00482	1315 204 006	(1312 298 911)	Kit	1./2.VİT.SENKROMENÇ KİT	SYNCH.KIT 1st/2nd
1	K20.00143	1312 304 106		2	1./ 2.VİT.SENKROMENÇ	ENGAGING RING
2	K20.00144	1268 304 424		2	1./ 2.VİT.SENK.FRENLEME	SYNCHRONIZING CONE
3	K20.00302	1268 304 494	(1268 304 491)	2	1./ 2.VİT.SENK.FRENLEME	INTERMEDIATE CONE
4	K20.00145	1268 304 525		2	1./ 2.VİT.SENK.FRENLEME	SYNCHRONIZING CONE
5	K20.00146	1312 304 158		1	1./ 2.VİT.YILDIZ DİŞLİ	GUIDE SLEEVE
6	K20.00209	1312 304 159		3	1./ 2.VİT.YIL.DİŞLİ BAKLASI	SLIDING BLOCK
7	K20.00111	1297 304 436		3	PRİZ.veYILDIZ DİŞLİ FİŞEĞİ	PRESSURE PIECE
8	K20.00110	0732 040 409		3	PRİZ.ve YILDIZ DİŞLİ YAYI	SPRING
9	K20.00147	1310 304 175	(1312 304 157)	1	1./ 2.VİT.SENK.HALKA	ENGAGING SLEEVE

SYNCHRONIZER KIT PLANETARY

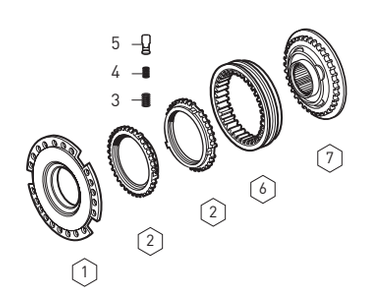

Fig.	Kacmaz No.	Oem No	Oem Old No	Pcs.	Ürün Tanımı	Description
	K20.00498	1295 298 939		Kit	AĞIR SERİ SENK.KİT	SYNCHRONIZER KIT
1	K20.00007	1296 233 006		1	TEPSİ SENKROMENÇ	FLANGE
2	K20.00038	1296 333 045	(1296 333 022)	2	AĞIR SERİ FRENLEME	SYNCHRONIZING CONE
3	K20.00469	0732 040 385		9	AĞIR SERİ YILDIZ DİŞLİ YAYI	SPRING
4	K20.00470	0732 040 386		9	AĞIR SERİ YILDIZ DİŞLİ YAYI	SPRING
5	K20.00471	1240 304 278		9	AĞIR SERİ YILDIZ DİŞ.FİŞEĞİ	PRESSURE PIECE
6	K20.00039	1296 333 023		1	AĞIR SERİ SENK.HALKA	ENGAGING SLEEVE
7	K20.00006	1313 233 001	(1297 233 018)	1	SERİ SENKROMENÇ	ENGAGING RING

Original parts names, oem numbers, symbols and descriptions used in this catalogue are for reference purposes only.

Fig.	Kacmaz No.	Oem No	Oem Old No	Pcs.	Ürün Tanımı	Description
	K20.00532	1315 233 029		Kit	AĞIR SERİ SENK.KİT	SYNCHRONIZER KIT
1	K20.00038	1296 333 045	(1296 333 022)	2	AĞIR SERİ FRENLEME	SYNCHRONIZING CONE
2	K20.00185	1313 333 001		1	AĞIR SERİ YILDIZ DİŞLİ	GUIDE SLEEVE
3	K20.00469	0732 040 385		9	AĞIR SERİ YILDIZ DİŞLİ YAYI	SPRING
4	K20.00470	0732 040 386		9	AĞIR SERİ YILDIZ DİŞLİ YAYI	SPRING
5	K20.00471	1240 304 278		9	AĞIR SERİ YILDIZ DİŞ.FİŞEĞİ	PRESSURE PIECE
6	K20.00039	1296 333 023		1	AĞIR SERİ SENK.HALKA	ENGAGING SLEEVE

SYNCHRONIZER KIT PLANETARY

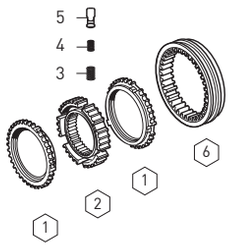

Fig.	Kacmaz No.	Oem No	Oem Old No	Pcs.	Ürün Tanımı	Description
1	K20.01584	1295 298 915		Kit	ŞANZIMAN CONTA TAKIMI	GASKET KIT
2		1313 301 038		1	ŞANZ.ÖN GÖVDE CONTASI	GASKET
3		1313 302 014		1	PRİZ.KEÇE KAPAK CONTASI	GASKET
4		1313 306 012		1	ŞANZ.HİLALİ KAPAK CONTASI	GASKET
5		1313 307 002		1	ŞANZ.ÖN GÖVDE ARKA CONTA	GASKET
5		1313 307 020		2	ŞANZ.KULE KAPAK CONTASI	GASKET
5		1313 307 003		1	ŞANZ.KULE KAPAK CONTASI	GASKET
5		1313 307 004		1	ŞANZ.KULE ALT KAPAK CONTASI	GASKET
5		1313 307 022		1	ŞANZ.KULE ÜST KAPAK CONTASI	GASKET
6		1313 301 037		1	ŞANZ.ARKA GÖVDE CONTASI	GASKET
7		1313 301 036		1	ŞANZ.BİLYA KAPAK CONTASI	GASKET
8	K20.02108	1238 308 201		1	PTO BAĞLANTI KAPAK CONTASI	GASKET
9		1313 307 005		1	ŞANZ.İSTİNAT KAPAK CONTASI	GASKET
10		1313 307 006		1	ŞANZ.İSTİNAT KAPAK CONTASI	GASKET

GEARBOX GASKET KIT

Fig.	Kacmaz No.	Oem No	Oem Old No	Pcs.	Ürün Tanımı	Description
1		1296 313 131		1	P.KİLİT EMNİYET SACI	RETAINING RING
2		0730 104 627		1	PARÇALI KİLİT	SPLIT RING
3		1296 313 238		1	PTO MİL KOVANI	SLIDING SLEEVE
4		0730 104 628		1	PTO DİŞLİ AYAR PULU	THRUST WASHER
5		1296 313 082		1	PTO DİŞLİ	GEAR 33 T
5		1296 313 083		1	PTO DİŞLİ	GEAR 36 T
5		1296 313 084		1	PTO DİŞLİ	GEAR 38 T
5		1296 313 085		1	PTO DİŞLİ	GEAR 39 T
5		1296 313 086		1	PTO DİŞLİ	GEAR 46 T
6	K20.00556	1296 213 028		1	PTO MİLİ DÜZ	INTERM.SHAFT
7	K20.00555	1296 213 028		1	PTO MİLİ FREZELİ	INTERM.SHAFT (Milled)
8		1296 313 125		1	PTO MİL SOMUNU	NUT
9		0735 410 139		1	PTO MİL BİLYASI	ROLLER BEARING
10		7429 032 102		1	PTO BİLYA KAPAK PULU	THRUST WASHER
11		1232 304 062		1	PTO BİLYA KAPAK RAYNELİ	SHIM (1.00mm)
11		1232 304 063		1	PTO BİLYA KAPAK RAYNELİ	SHIM (0.90mm)
11		1232 304 072		1	PTO BİLYA KAPAK RAYNELİ	SHIM (0.70mm)
12		1250 313 190		1	PTO BAĞLANTI KAPAĞI	COVER
13	K20.01013	0750 111 341		1	ŞANZ.ARKA KAPAK KEÇESİ	OIL SEAL

P.T.O. (POWER TAKE OFF)

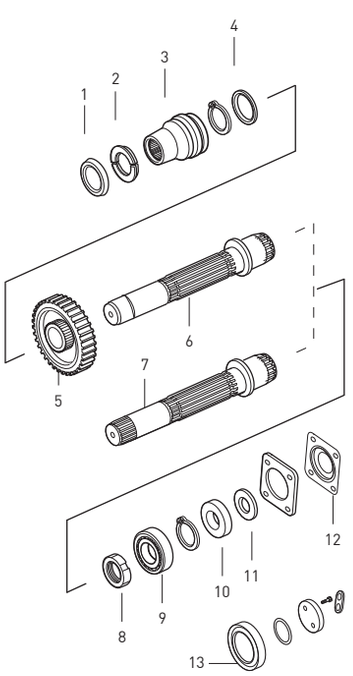

Original parts names, oem numbers, symbols and descriptions used in this catalogue are for reference purposes only.

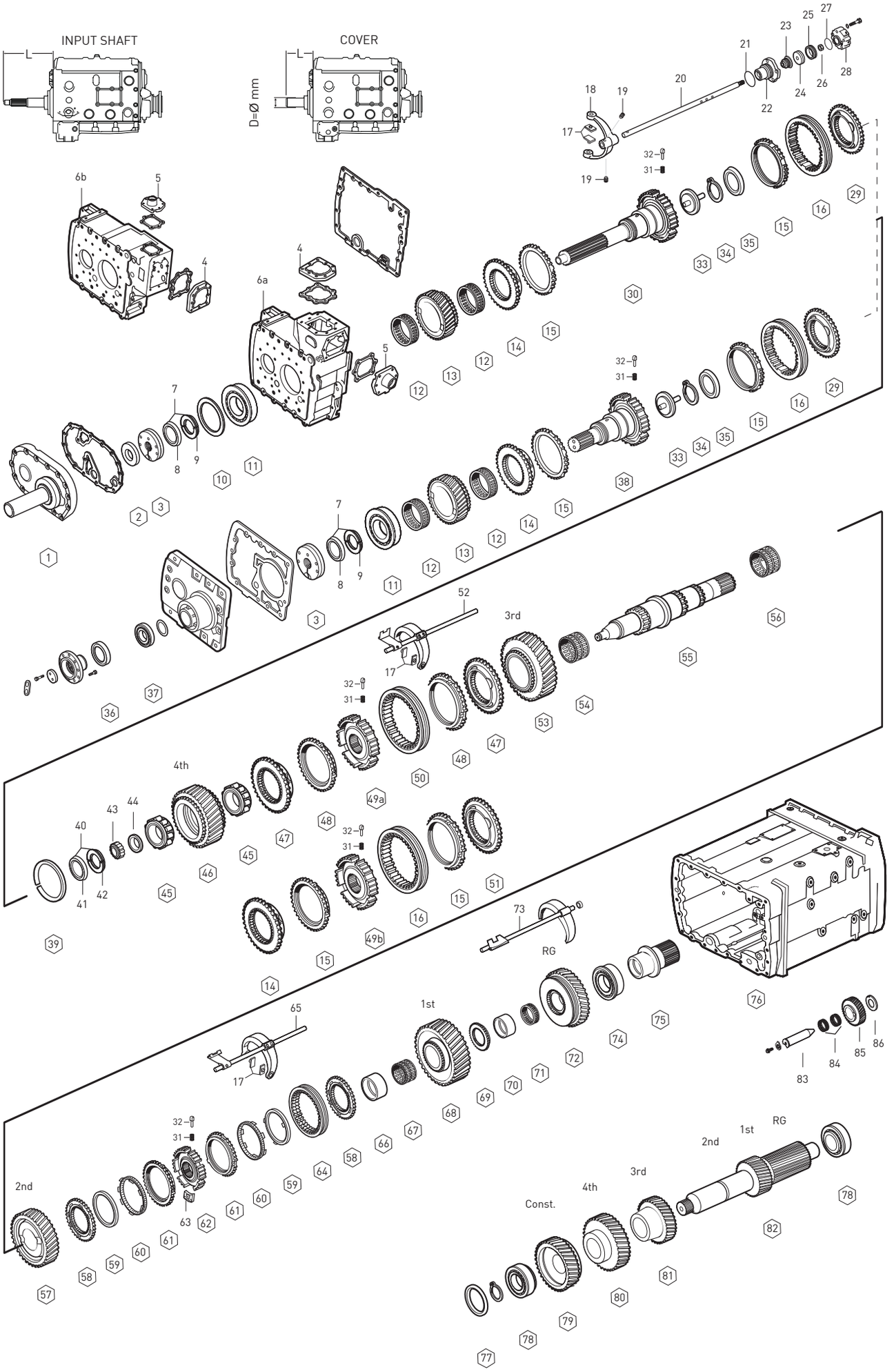

Original parts names, oem numbers, symbols and descriptions used in this catalogue are for reference purposes only.

Fig.	Kacmaz No.	Oem No	Oem Old No	Pcs.	Ürün Tanımı	Description	Sizes	Notes	SG 10.14-0.72	SG 13.80-0.84	DG 16.47-1.00
1		1312 302 096		1	PRİZDİREK KEÇE KAPAĞI	COVER	L=147 D=60	A	◆	◆	◆
1		1312 302 036		1	PRİZDİREK KEÇE KAPAĞI	COVER	L=170 D=60	BD		◆	
1		1312 302 044		1	PRİZDİREK KEÇE KAPAĞI	COVER	L=190 D=62.6	BC		◆	◆
1		1312 302 047		1	PRİZDİREK KEÇE KAPAĞI	COVER	L=170 D=62.6	C			◆
2	K20.01003	0734 310 387	(0734 310 386)	1	PRİZDİREK KEÇESİ	OIL SEAL	55X75X8mm	ABCD	◆	◆	◆
2	K20.01004	0634 310 733		1	PRİZDİREK KEÇESİ	OIL SEAL	90X110X13mm	E		◆	
3	K20.00484	1295 202 041		1	YAĞ POMPASI	OIL PUMP			◆	◆	◆
4	K20.00561	1295 307 479		1	ŞANZIMAN KULE KAPAĞI	COVER			◆	◆	◆
5	K20.00597	1295 307 434		1	ŞANZIMAN KULE KAPAĞI	COVER			◆	◆	◆
6b		1312 301 020	(1312 301 006)	1	ŞANZIMAN ÖN GÖVDE	HOUSING		A	◆	◆	◆
6b		1312 301 021	(1312 301 007)	1	ŞANZIMAN ÖN GÖVDE	HOUSING		B		◆	◆
6a		1312 301 033	(1312 301 009)	1	ŞANZIMAN ÖN GÖVDE	HOUSING		C		◆	◆
6a		1312 301 034		1	ŞANZIMAN ÖN GÖVDE	HOUSING		D		◆	
6b		1312 301 055		1	ŞANZIMAN ÖN GÖVDE	HOUSING		E		◆	
7	K20.01662	1499 298 135		1	EMN.SACI VE P.KİLİT TAK.	SPLIT RING KIT	4.30mm	(1)	◆	◆	◆
7	K20.01664	1499 298 133		1	EMN.SACI VE P.KİLİT TAK.	SPLIT RING KIT	4.20mm	(2)	◆	◆	◆
7	K20.01666	1499 298 131		1	EMN.SACI VE P.KİLİT TAK.	SPLIT RING KIT	4.10mm	(3)	◆	◆	◆
7	K20.01555	1499 298 129		1	EMN.SACI VE P.KİLİT TAK.	SPLIT RING KIT	4.00mm	(4)	◆	◆	◆
7	K20.01557	1499 298 127		1	EMN.SACI VE P.KİLİT TAK.	SPLIT RING KIT	3.90mm	(5)	◆	◆	◆
7	K20.01559	1499 298 125		1	EMN.SACI VE P.KİLİT TAK.	SPLIT RING KIT	3.80mm	(6)	◆	◆	◆
8	K20.01554	0730 061 816		1	P. KİLİT EMNİYET SACI	RETAINING RING			◆	◆	◆
9	K20.01663	0730 106 168		2	PARÇALI KİLİT	SPLIT RING	4.30mm		◆	◆	◆
9	K20.01665	0730 106 166		2	PARÇALI KİLİT	SPLIT RING	4.20mm		◆	◆	◆
9	K20.01667	0730 106 164		2	PARÇALI KİLİT	SPLIT RING	4.10mm		◆	◆	◆
9	K20.01556	0730 106 162		2	PARÇALI KİLİT	SPLIT RING	4.00mm		◆	◆	◆
9	K20.01558	0730 106 160		2	PARÇALI KİLİT	SPLIT RING	3.90mm		◆	◆	◆
9	K20.01560	0730 106 158		2	PARÇALI KİLİT	SPLIT RING	3.80mm		◆	◆	◆
10	K20.01668	0730 005 748		1	PRİZ.ÖN BİLYA RAYNELİ	SHIM	0.90mm		◆	◆	◆
10	K20.01669	0730 005 743		1	PRİZ.ÖN BİLYA RAYNELİ	SHIM	0.65mm		◆	◆	◆
10	K20.01670	2050 309 066		1	PRİZ.ÖN BİLYA RAYNELİ	SHIM	0.50mm		◆	◆	◆
10	K20.01671	2050 309 067		1	PRİZ.ÖN BİLYA RAYNELİ	SHIM	0.30mm		◆	◆	◆
10	K20.01582	0730 005 747		1	PRİZ.ÖN BİLYA RAYNELİ	SHIM	0.25mm		◆	◆	◆
10	K20.01672	2050 309 068		1	PRİZ.ÖN BİLYA RAYNELİ	SHIM	0.20mm		◆	◆	◆
10	K20.01673	2001673		1	PRİZ.ÖN BİLYA RAYNELİ	SHIM	0.10mm		◆	◆	◆
11	K20.01103	0750 117 431		1	PRİZDİREK ÖN BİLYA	ROLLER BEARING	75X150X30.5mm		◆	◆	◆
12	K20.01325	0735 320 950		2	PRİZ. MASURA BİLYA	NEEDLE CAGE	93X101X32.5mm		◆	◆	◆
13	K20.00120	1312 302 077		1	TAKVİYE DİŞLİSİ 28 DİŞ	CONSTANT GEAR 28 T		A	◆		
13	K20.00121	1312 302 073		1	TAKVİYE DİŞLİSİ 34 DİŞ	CONSTANT GEAR 34 T		ABCDEF		◆	
13	K20.00122	1312 302 074		1	TAKVİYE DİŞLİSİ 30 DİŞ	CONSTANT GEAR 30 T		ABCF			◆
14	K20.00101	1312 304 027		1	TAKVİYE SENKROMENÇ	ENGAGING RING			◆	◆	◆
15	K20.00108	1297 304 484	(1297 304 402)	2	TAKVİYE SENK.FRENLEME	SYNCHRONIZING CONE			◆	◆	◆

NOTES :

ABCDEF alfabetic letters are used in conjunction with the encoded parts.

(1) This kit includes (1499 298 135) = 2pcs 0730 106 168 + 1pcs 0730 061 816
(2) This kit includes (1499 298 133) = 2pcs 0730 106 166 + 1pcs 0730 061 816
(3) This kit includes (1499 298 131) = 2pcs 0730 106 164 + 1pcs 0730 061 816
(4) This kit includes (1499 298 129) = 2pcs 0730 106 162 + 1pcs 0730 061 816
(5) This kit includes (1499 298 127) = 2pcs 0730 106 160 + 1pcs 0730 061 816
(6) This kit includes (1499 298 125) = 2pcs 0730 106 158 + 1pcs 0730 061 816

NOTLAR :

ABCDEF alfabetik harfler ile kodlananparçalar birlikte kullanılır.

(1) (1499 298 135) nolu kit bu parçalardan oluşur = 2pcs 0730 106 168 + 1pcs 0730 061 816
(2) (1499 298 133) nolu kit bu parçalardan oluşur = 2pcs 0730 106 166 + 1pcs 0730 061 816
(3) (1499 298 131) nolu kit bu parçalardan oluşur = 2pcs 0730 106 164 + 1pcs 0730 061 816
(4) (1499 298 129) nolu kit bu parçalardan oluşur = 2pcs 0730 106 162 + 1pcs 0730 061 816
(5) (1499 298 127) nolu kit bu parçalardan oluşur = 2pcs 0730 106 160 + 1pcs 0730 061 816
(6) (1499 298 125) nolu kit bu parçalardan oluşur = 2pcs 0730 106 158 + 1pcs 0730 061 816

Original parts names, oem numbers, symbols and descriptions used in this catalogue are for reference purposes only.

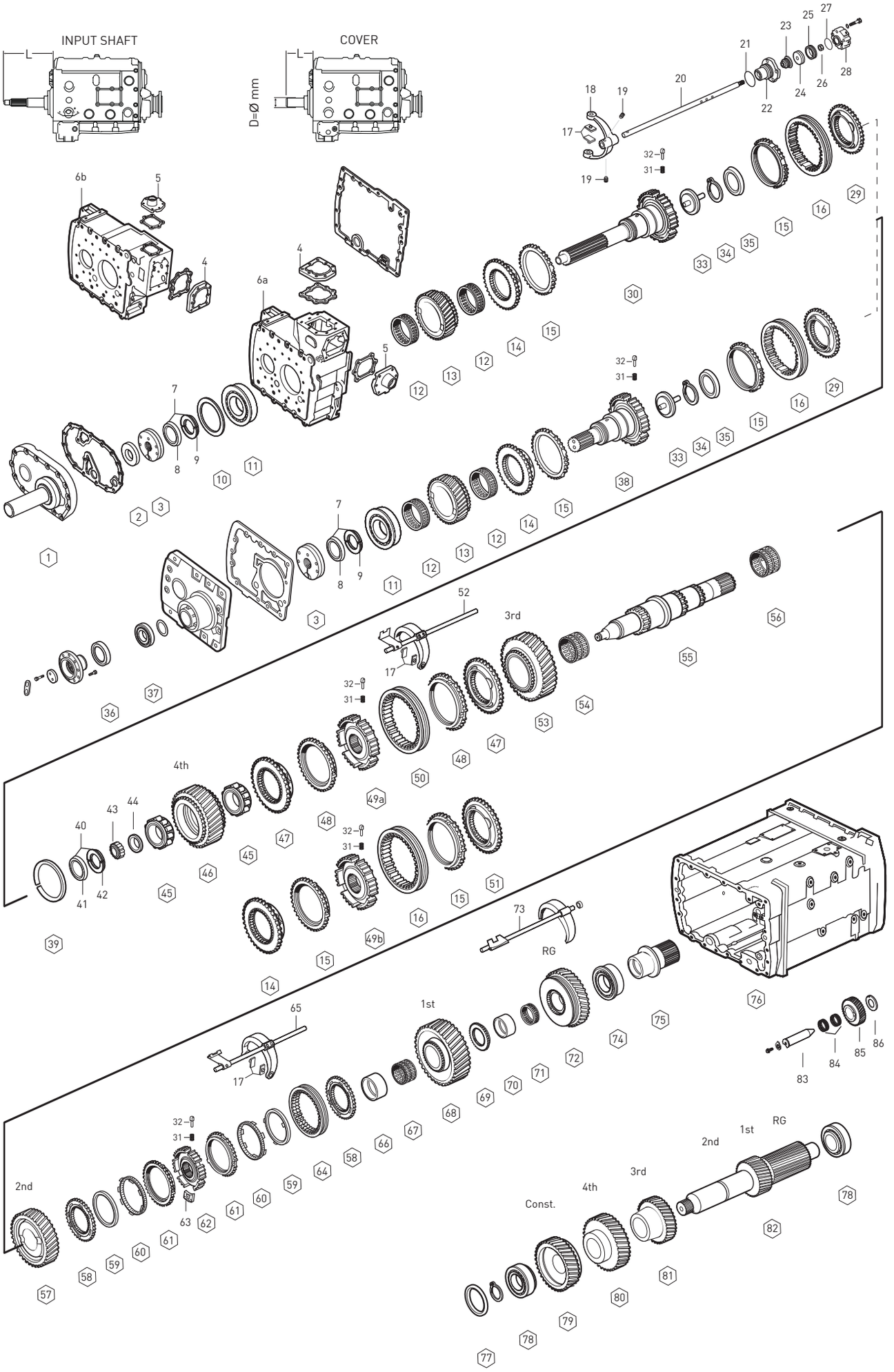

Original parts names, oem numbers, symbols and descriptions used in this catalogue are for reference purposes only.

Fig.	Kacmaz No.	Oem No	Oem Old No	Pcs.	Ürün Tanımı	Description	Sizes	Notes	SG 10.14-0.72	SG 13.80-0.84	DG 16.47-1.00
16	K20.00098	1310 304 202	(1312 302 057)	1	TAKVİYE SENK.HALKA	ENGAGING SLEEVE			◆	◆	◆
			(1310 304 174)								
17	K20.00204	1297 306 120		6	TAKVİYE HİLAL PABUCU	SLIDING PAD			◆	◆	◆
18		1313 312 002		1	TAKVİYE HİLALİ	G.SHIFT FORK			◆	◆	◆
19	K20.01688	1315 312 047		2	TAKVİYE HİLAL VİDASI	SCREW	M12X1.0mm		◆	◆	◆
20		1312 312 001		1	TAKVİYE HİLAL MİLİ	G.SHIFT RAIL			◆	◆	◆
21		0634 313 671		1	TAKVİYE SİLİNDİR ORİNGİ	O-RING	80.0X3.0mm		◆	◆	◆
22	K20.01738	1296 312 042	(1296 312 016)	1	TAKVİYE SİLİNDİR GÖVDESİ	CYLINDER			◆	◆	◆
23	K20.01016	0750 112 034		1	TAKVİYE HİLAL MİL KEÇESİ	FLANGE PACKING	25.0X38.0X14.2mm		◆	◆	◆
24		1312 312 003	(1296 312 056)	1	TAKVİYE HİLAL MİL PİSTONU	PISTON			◆	◆	◆
25	K20.01021	0750 112 089		1	TAKVİYE HAVA KEÇESİ	DOUBLE PACKING	53.0X63.0X16.2mm		◆	◆	◆
26		0737 006 095		1	TAKVİYE HİLAL MİL SOMUNU	NUT	M16X1.5mm		◆	◆	◆
27		0634 314 018		1	TAKVİYE SİLİNDİR ORİNGİ	O-RING	59.0X2.0mm		◆	◆	◆
28		0750 132 033		1	TAKVİYE VENTİLİ	5/2 WAY VALVE			◆	◆	◆
29	K20.00097	1312 304 056		1	TAKVİYE SENKROMENÇ	ENGAGING RING			◆	◆	◆
30	K20.00533	1312 202 036	(1312 202 030)	1	PRİZDİREK	INPUT SHAFT	L=260 SAE 2	A	◆	◆	◆
30	K20.00116	1312 202 037	(1312 202 026)	1	PRİZDİREK	INPUT SHAFT	L=320 SAE 2	B		◆	◆
30	K20.00534	1312 202 038	(1312 202 029)	1	PRİZDİREK	INPUT SHAFT	L=310 SAE 2	C		◆	◆
30	K20.00117	1312 202 039	(1312 202 028)	1	PRİZDİREK	INPUT SHAFT	L=286 SAE 2	D		◆	
30	K20.00535	1312 221 003	(1312 202 002)	1	PRİZDİREK	INPUT SHAFT	L=397.6 SAE 2	E		◆	
31	K20.00110	0732 040 409		9	PRİZ.ve YILDIZ DİŞLİ YAYI	SPRING			◆	◆	◆
32	K20.00111	1297 304 436		9	PRİZ.ve YILDIZ DİŞLİ FİŞEĞİ	PRESSURE PIECE			◆	◆	◆
33	K20.01504	1315 302 196		1	PRİZDİREK YAĞ PİPETİ	OIL PIPET			◆	◆	◆
34	K20.01505	0630 502 027		1	PRİZDİREK SEKMANI	RETANING RING	472/50X2mm		◆	◆	◆
35	K20.01011	0501 314 060	(0750 101 179)	1	PRİZDİREK ARKA KEÇE	OIL SEAL			◆	◆	◆
36	K20.01007	0734 319 276		1	PRİZDİREK ÖN KEÇE	OIL SEAL	75X105X14mm	F		◆	◆
37	K20.01136	0735 300 740	(0750 117 312)	1	ŞANZ.KAPAK BİLYASI	ROLLER BEARING	50.8X104.7X30.1mm	F		◆	◆
38	K20.00536	1312 202 041	(1312 202 031)	1	PRİZDİREK (Kısa Tip)	INPUT SHAFT (Short Type)		F		◆	◆
39	K20.01523	0730 005 468		1	SENKROMENÇ AYAR SEKMANI	RING	4.00mm		◆	◆	◆
39	K20.01524	0730 005 466		1	SENKROMENÇ AYAR SEKMANI	RING	3.60mm		◆	◆	◆
40	K20.01561	1499 298 027		1	EMN.SACI VE P.KİLİT TAK.	SPLIT RING KIT	5.00mm	(7)	◆	◆	◆
40	K20.01563	1499 298 026		1	EMN.SACI VE P.KİLİT TAK.	SPLIT RING KIT	4.90mm	(8)	◆	◆	◆
40	K20.01580	2001580		1	EMN.SACI VE P.KİLİT TAK.	SPLIT RING KIT	4.85mm	(9)	◆	◆	◆
40	K20.01565	1499 298 025		1	EMN.SACI VE P.KİLİT TAK.	SPLIT RING KIT	4.80mm	(10)	◆	◆	◆
40	K20.01567	1499 298 024		1	EMN.SACI VE P.KİLİT TAK.	SPLIT RING KIT	4.70mm	(11)	◆	◆	◆
40	K20.01569	1499 298 023		1	EMN.SACI VE P.KİLİT TAK.	SPLIT RING KIT	4.60mm	(12)	◆	◆	◆
41	K20.01571	0730 062 781		1	P. KİLİT EMNİYET SACI	RETAINING RING			◆	◆	◆
42	K20.01562	0730 107 023		2	PARÇALI KİLİT	SPLIT RING	5.00mm		◆	◆	◆
42	K20.01564	0730 107 022		2	PARÇALI KİLİT	SPLIT RING	4.90mm		◆	◆	◆
42	K20.01581	2001581		2	PARÇALI KİLİT	SPLIT RING	4.85mm		◆	◆	◆
42	K20.01566	0730 107 021		2	PARÇALI KİLİT	SPLIT RING	4.80mm		◆	◆	◆

NOTES :

ABCDEF alfabetic letters are used in conjunction with the encoded parts.

(7) This kit includes (1499 298 027) = 2pcs 0730 107 023 + 1pcs 0730 062 781
(8) This kit includes (1499 298 026) = 2pcs 0730 107 022 + 1pcs 0730 062 781
(9) This kit includes (2001580) = 2pcs 2001581 + 1pcs 0730 062 781
(10) This kit includes (1499 298 025) = 2pcs 0730 107 021 + 1pcs 0730 062 781
(11) This kit includes (1499 298 024) = 2pcs 0730 107 020 + 1pcs 0730 062 781
(12) This kit includes (1499 298 023) = 2pcs 0730 107 019 + 1pcs 0730 062 781

NOTLAR :

ABCDEF alfabetik harfler ile kodlananparçalar birlikte kullanılır.

(7) (1499 298 027) nolu kit bu parçalardan oluşur = 2pcs 0730 107 023 + 1pcs 0730 062 781
(8) (1499 298 026) nolu kit bu parçalardan oluşur = 2pcs 0730 107 022 + 1pcs 0730 062 781
(9) (2001580) nolu kit bu parçalardan oluşur = 2pcs 2001581 + 1pcs 0730 062 781
(10) (1499 298 025) nolu kit bu parçalardan oluşur = 2pcs 0730 107 021 + 1pcs 0730 062 781
(11) (1499 298 024) nolu kit bu parçalardan oluşur = 2pcs 0730 107 020 + 1pcs 0730 062 781
(12) (1499 298 023) nolu kit bu parçalardan oluşur = 2pcs 0730 107 019 + 1pcs 0730 062 781

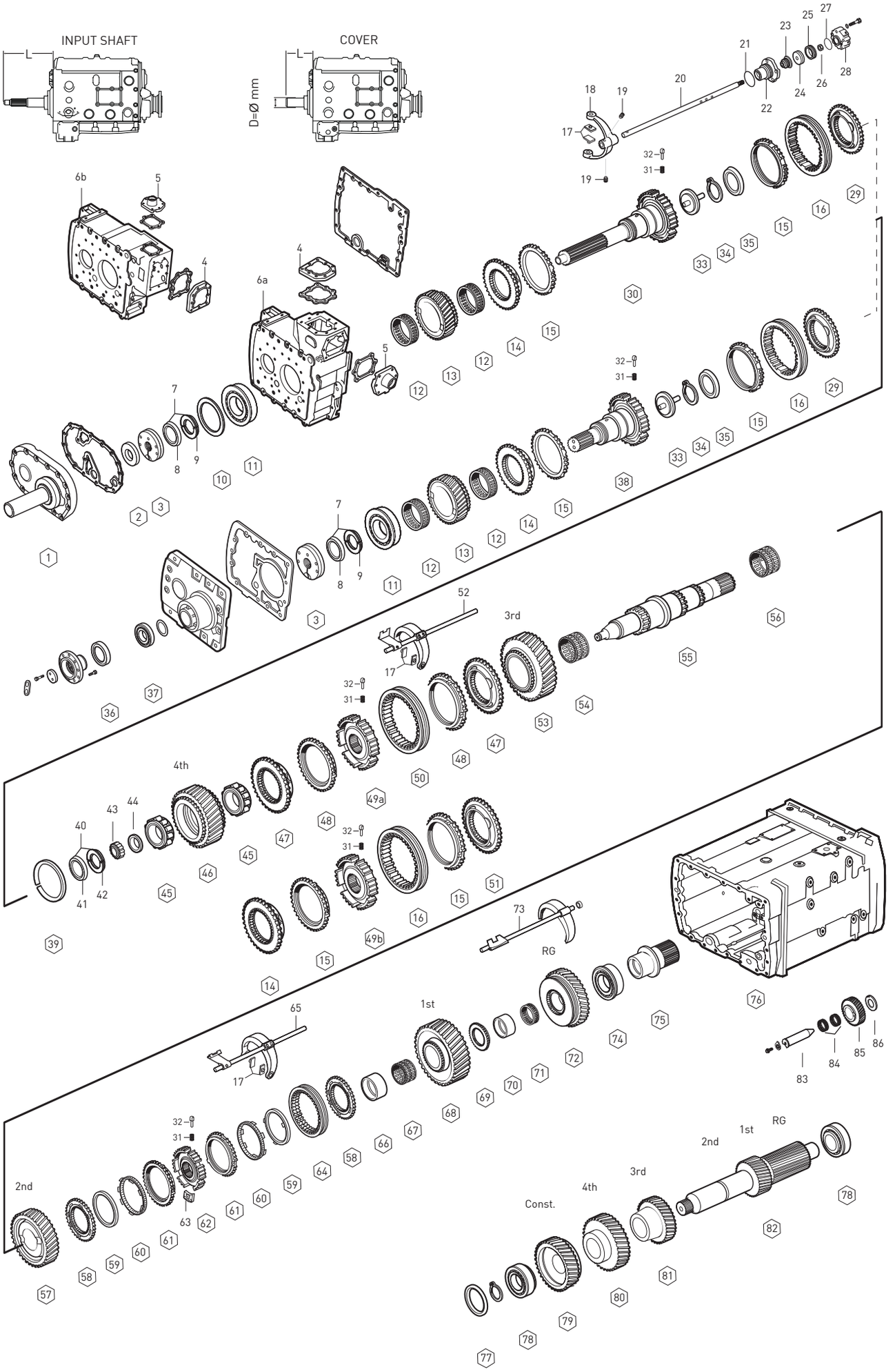

Original parts names, oem numbers, symbols and descriptions used in this catalogue are for reference purposes only.

Fig.	Kacmaz No.	Oem No	Oem Old No	Pcs.	Ürün Tanımı	Description	Sizes	Notes	SG 10.14-0.72	SG 13.80-0.84	DG 16.47-1.00
42	K20.01568	0730 107 020		2	PARÇALI KİLİT	SPLIT RING	4.70mm		◆	◆	◆
42	K20.01570	0730 107 019		2	PARÇALI KİLİT	SPLIT RING	4.60mm		◆	◆	◆
43	K20.01109	0750 117 232	(0735 371 563)	1	KAMALI MİL UÇ BİLYA	ROLLER BEARING	42X40.3mm		◆	◆	◆
44	K20.01527	1315 304 048		1	KAMALI MİL UÇ BİLYA PULU	THRUST WASHER	8.00mm		◆	◆	◆
44	K20.01528	1315 304 047		1	KAMALI MİL UÇ BİLYA PULU	THRUST WASHER	7.90mm		◆	◆	◆
44	K20.01529	1315 304 046		1	KAMALI MİL UÇ BİLYA PULU	THRUST WASHER	7.80mm		◆	◆	◆
45	K20.01112	0750 118 258	(0750 118 191)	2	4.VİTES DİŞLİ MAS.BİLYA	ROLLER BEARING	67X101X38mm		◆	◆	◆
46	K20.00132	1312 304 029		1	4.VİTES DİŞLİSİ 30 DİŞ	GEAR 4th 30 T		A	◆		
46	K20.00133	1312 304 032		1	4.VİTES DİŞLİSİ 30 DİŞ	GEAR 4th 30 T		ABCDEF		◆	
46	K20.00134	1312 304 031		1	4.VİTES DİŞLİSİ 34 DİŞ	GEAR 4th 34 T		ABCF			◆
47	K20.00102	1316 304 159	(1316 304 145)	2	3./ 4.VİT.SENKROMENÇ	ENGAGING RING				◆	◆
14	K20.00101	1312 304 027		1	3./ 4.VİT.SENKROMENÇ	ENGAGING RING			◆		
48	K20.00109	1316 304 168	(1316 304 149)	2	3./ 4.VİT.SENK.FRENLEME	SYNCHRONIZING CONE				◆	◆
15	K20.00108	1297 304 484	(1297 304 402)	2	3./ 4.VİT.SENK.FRENLEME	SYNCHRONIZING CONE			◆		
49a	K20.00136	1316 304 162		1	3./ 4.VİT.YILDIZ DİŞLİ	GUIDE SLEEVE				◆	◆
49b	K20.00181	1312 304 052		1	3./ 4.VİT.YILDIZ DİŞLİ	GUIDE SLEEVE			◆		
50	K20.00103	1316 304 167	(1315 304 135)	1	3./ 4.VİT.SENK.HALKA	ENGAGING SLEEVE				◆	◆
16	K20.00098	1310 304 202	(1312 302 057)	1	3./ 4.VİT.SENK.HALKA	ENGAGING SLEEVE			◆		
			(1310 304 174)								
51	K20.00566	1312 304 080		1	3./ 4.VİT.SENKROMENÇ	ENGAGING RING			◆		
52		1312 206 045		1	3./4.VİTES HİLALİ	GEAR SHIT FORK 3rd/4th		A	◆		
52		1312 206 026		1	3./4.VİTES HİLALİ	GEAR SHIT FORK 3rd/4th		ABCE		◆	◆
52		1312 206 025		1	3./4.VİTES HİLALİ	GEAR SHIT FORK 3rd/4th		DC		◆	
53	K20.00137	1312 304 075		1	3.VİTES DİŞLİSİ 25 DİŞ	GEAR 3rd 25 T		A	◆		
53	K20.00138	1312 304 137		1	3.VİTES DİŞLİSİ 32 DİŞ	GEAR 3rd 32 T		ABCDEF		◆	
53	K20.00139	1312 304 136		1	3.VİTES DİŞLİSİ 34 DİŞ	GEAR 3rd 34 T		ABCF			◆
54	K20.01313	0735 320 451		1	3.VİT.MASURA BİLYA	NEEDLE CAGE	82X90X60mm		◆	◆	◆
55	K20.00430	1312 304 161		1	KAMALI MİL	MAIN SHAFT		A	◆		
55	K20.00431	1316 304 130	(1312 304 134)	1	KAMALI MİL	MAIN SHAFT		ABCDEF		◆	◆
56	K20.01326	0750 115 303	(0735 321 094)	2	2./3.VİT.MASURA BİLYA	NEEDLE CAGE	92X100X63mm		◆	◆	◆
57	K20.00140	1312 304 142		1	2.VİTES DİŞLİSİ	GEAR 2nd		A	◆		
57	K20.00141	1312 304 141		1	2.VİTES DİŞLİSİ 37 DİŞ	GEAR 2nd 37 T		ABCDEF		◆	
57	K20.00142	1312 304 139		1	2.VİTES DİŞLİSİ 38 DİŞ	GEAR 2nd 38 T		ABCF			◆
58	K20.00143	1312 304 106		2	1./ 2.VİT.SENKROMENÇ	ENGAGING RING			◆	◆	◆
59	K20.00144	1268 304 424		2	1./ 2.VİT.SENK.FRENLEME	SYNCHRONIZING CONE			◆	◆	◆
60	K20.00302	1268 304 494	(1268 304 491)	2	1./ 2.VİT.SENK.FRENLEME	INTERMEDIATE CONE			◆	◆	◆
61	K20.00145	1268 304 525		2	1./ 2.VİT.SENK.FRENLEME	SYNCHRONIZING CONE			◆	◆	◆
62	K20.00146	1312 304 158		1	1./ 2.VİT.YILDIZ DİŞLİ	GUIDE SLEEVE			◆	◆	◆
63	K20.00209	1312 304 159		3	1./ 2.VİT.YILDIZ DİŞ.BAKLASI	SLIDING BLOCK			◆	◆	◆
64	K20.00147	1310 304 175	(1312 304 157)	1	1./ 2.VİT.SENK.HALKA	ENGAGING SLEEVE			◆	◆	◆
65		1312 206 043	(1312 206 011)	1	1./2.VİTES HİLALİ	GEAR SHIT FORK 1st/2nd		A	◆		

NOTES :

ABCDEF alfabetic letters are used in conjunction with the encoded parts.

NOTLAR :

ABCDEF alfabetik harfler ile kodlananparçalar birlikte kullanılır.

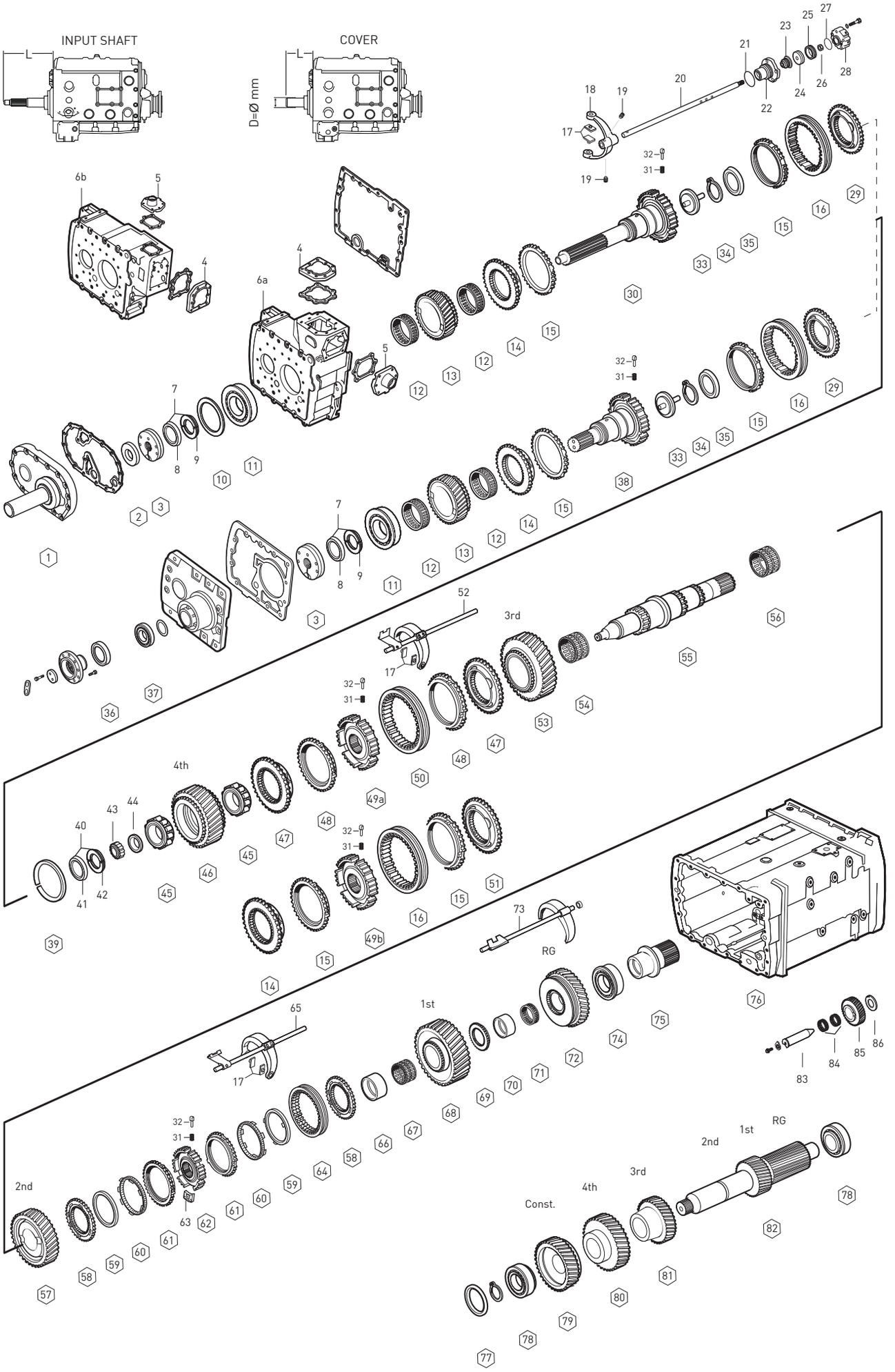

Original parts names, oem numbers, symbols and descriptions used in this catalogue are for reference purposes only.

Fig.	Kacmaz No.	Oem No	Oem Old No	Pcs.	Ürün Tanımı	Description	Sizes	Notes	SG 10.14-0.72	SG 13.80-0.84	DG 16.47-1.00
65		1312 206 017	(1312 206 022)	1	1./2.VİTES HİLALİ	GEAR SHIT FORK 1st/2nd		ABCE		◆	◆
65		1312 206 013	(1312 206 021)	1	1./2.VİTES HİLALİ	GEAR SHIT FORK 1st/2nd		DC		◆	
66	K20.00135	1312 304 008		1	1.VİTES MAS.BİLYA ÇANAĞI	BEARING RACE			◆		
66	K20.00389	1312 304 084		1	1.VİTES MAS.BİLYA ÇANAĞI	BEARING RACE				◆	◆
67	K20.01327	0750 115 304		1	1.VİTES MASURA BİLYA	NEEDLE CAGE	92X100X72mm		◆		
67	K20.01328	0750 115 327		1	1.VİTES MASURA BİLYA	NEEDLE CAGE	96X104X72mm			◆	◆
68	K20.00432	1312 304 077		1	1.VİTES DİŞLİSİ 34 DİŞ	GEAR 1st 34 T		A	◆		
68	K20.00433	1312 304 086		1	1.VİTES DİŞLİSİ 44 DİŞ	GEAR 1st 44 T		ABCDEF		◆	
68	K20.00434	1312 304 085		1	1.VİTES DİŞLİSİ 47 DİŞ	GEAR 1st 47 T		ABCF			◆
69	K20.00435	1312 304 037		1	GERİ VİTES YILDIZ DİŞLİ	HUB			◆		
69	K20.00436	1312 304 083		1	GERİ VİTES YILDIZ DİŞLİ	HUB				◆	◆
70	K20.00437	1312 304 011		1	GERİ VİT.MAS.BİL.ÇANAĞI	BEARING RACE			◆		
70	K20.00422	1316 304 133	(1312 304 082)	1	GERİ VİT.MAS.BİL.ÇANAĞI	BEARING RACE				◆	◆
71	K20.01329	0735 321 103		1	GERİ VİTES MASURA BİLYA	NEEDLE CAGE	77X85X50mm		◆		
71	K20.01330	0750 115 326		1	GERİ VİTES MASURA BİLYA	NEEDLE CAGE	90X98X50mm			◆	◆
72	K20.00438	1312 304 078		1	GERİ VİTES DİŞLİSİ 39 DİŞ	REVERSE GEAR 39 T		A	◆		
72	K20.00440	1312 304 088		1	GERİ VİTES DİŞLİSİ 39 DİŞ	REVERSE GEAR 39 T		ABCDEF		◆	
72	K20.00439	1312 304 087		1	GERİ VİTES DİŞLİSİ 38 DİŞ	REVERSE GEAR 38 T		ABCF			◆
73		1312 206 033		1	GERİ VİTES HİLALİ	GEAR SHIT FORK/RG		A	◆		
73		1312 206 028		1	GERİ VİTES HİLALİ	GEAR SHIT FORK/RG		ABCE		◆	◆
73		1312 206 027		1	GERİ VİTES HİLALİ	GEAR SHIT FORK/RG		DC		◆	
74	K20.01120	0750 117 233		1	KAMALI MİL ARKA BİLYA	ROLLER BEARING	65X140X36.5mm		◆		
74	K20.01121	0750 117 678		1	KAMALI MİL ARKA BİLYA	ROLLER BEARING	80X140X36.5mm			◆	◆
75	K20.00537	1297 304 307		1	GÜNEŞ DİŞLİ 27 DİŞ	SUN GEAR 27 T		A	◆		
76		1312 301 075	(1312 301 066)	1	ŞANZIMAN ORTA GÖVDE	HOUSING		AE		◆	◆
76		1312 301 080	(1312 301 064)	1	ŞANZIMAN ORTA GÖVDE	HOUSING		A	◆		
76		1312 301 073	(1312 301 059)	1	ŞANZIMAN ORTA GÖVDE	HOUSING		CBDE		◆	◆
77	K20.01674	0730 106 917		1	GRUP MİLİ ÖN BİLYA RAYNELİ	SHIM	3.00mm		◆	◆	◆
77	K20.01675	0730 106 909		1	GRUP MİLİ ÖN BİLYA RAYNELİ	SHIM	2.60mm		◆	◆	◆
77	K20.01676	0730 101 467		1	GRUP MİLİ ÖN BİLYA RAYNELİ	SHIM	2.20mm		◆	◆	◆
77	K20.01677	0730 106 905		1	GRUP MİLİ ÖN BİLYA RAYNELİ	SHIM	1.85mm		◆	◆	◆
77	K20.01678	2001678		1	GRUP MİLİ ÖN BİLYA RAYNELİ	SHIM	0.30mm		◆	◆	◆
77	K20.01679	2001679		1	GRUP MİLİ ÖN BİLYA RAYNELİ	SHIM	0.20mm		◆	◆	◆
77	K20.01680	2001680		1	GRUP MİLİ ÖN BİLYA RAYNELİ	SHIM	0.10mm		◆	◆	◆
78	K20.01126	0750 117 009		2	GRUP MİLİ BİLYASI	ROLLER BEARING	49.2X103.1X43.6mm		◆	◆	◆
79	K20.00123	1312 303 003		1	OVARD.DİŞLİ KARŞ.34 DİŞ	CONSTANT GEAR 34 T		A	◆		
79	K20.00124	1312 303 006		1	OVARD.DİŞLİ KARŞ.37 DİŞ	CONSTANT GEAR 37 T		ABCDEF		◆	
79	K20.00125	1312 303 005		1	OVARD.DİŞLİ KARŞ.39 DİŞ	CONSTANT GEAR 39 T		ABCF			◆
80	K20.00126	1312 303 014		1	4.VİTES DİŞLİ KARŞ.31 DİŞ	GEAR 4th 31 T		A	◆		
80	K20.00127	1312 303 017		1	4.VİTES DİŞLİ KARŞ.39 DİŞ	GEAR 4th 39 T		ABCDEF		◆	
80	K20.00128	1312 303 016		1	4.VİTES DİŞLİ KARŞ.37 DİŞ	GEAR 4th 37 T		ABCF			◆

NOTES :

ABCDEF alfabetic letters are used in conjunction with the encoded parts.

NOTLAR :

ABCDEF alfabetik harfler ile kodlananparçalar birlikte kullanılır.

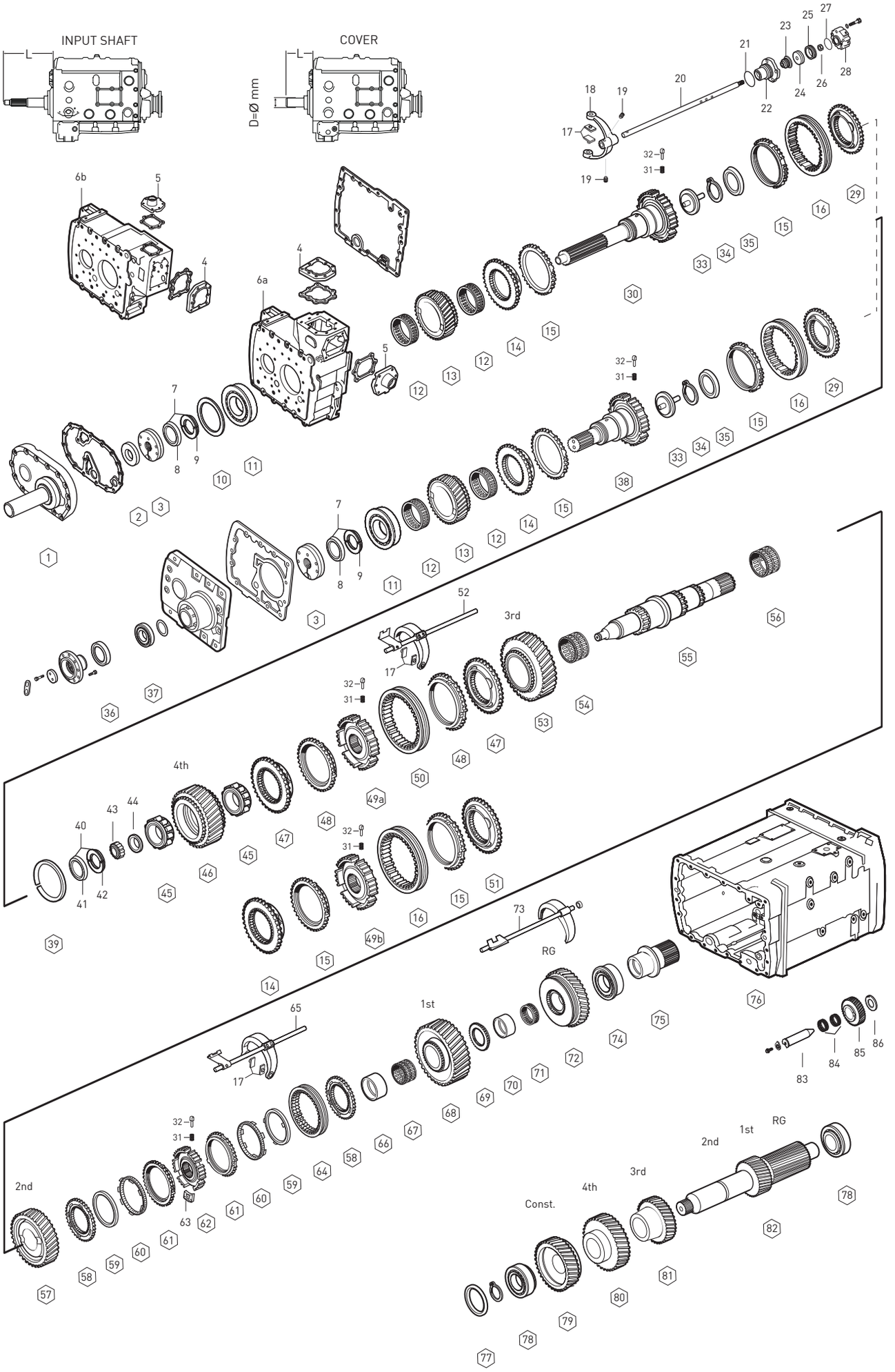

Original parts names, oem numbers, symbols and descriptions used in this catalogue are for reference purposes only.

Fig.	Kacmaz No.	Oem No	Oem Old No	Pcs.	Ürün Tanımı	Description	Sizes	Notes	SG 10.14-0.72	SG 13.80-0.84	DG 16.47-1.00
81	K20.00129	1312 303 036		1	3.VİTES DİŞLİ KARŞ.36 DİŞ	GEAR 3rd 36 T		A	◆		
81	K20.00130	1312 303 020		1	3.VİTES DİŞLİ KARŞ.28 DİŞ	GEAR 3rd 28 T		ABCDEF		◆	
81	K20.00131	1312 303 021		1	3.VİTES DİŞLİ KARŞ.26 DİŞ	GEAR 3rd 26 T		ABCF			◆
82	K20.00441	1312 303 037		1	GRUP MİLİ 20-24 DİŞ	COUNTER SHAFT 20-24 T		A	◆		
82	K20.00442	1312 303 009		1	GRUP MİLİ 19-23 DİŞ	COUNTER SHAFT 19-23 T		ABCDEF		◆	
82	K20.00443	1312 303 008		1	GRUP MİLİ 17-20 DİŞ	COUNTER SHAFT 17-20 T		ABCF			◆
83	K20.00598	1295 305 056	(1295 305 008)	1	KÜÇÜK GERİ VİTES PİMİ	PIN			◆	◆	◆
			(1295 305 057)								
84	K20.01336	0750 115 255		2	KÜÇÜK GERİ VİT.MAS.BİLYA	NEEDLE CAGE	45.0X53.0X25.0mm		◆	◆	◆
85	K20.00625	1312 305 003		1	KÜÇÜK GERİ VİTES	REV.IDLER GEAR		A	◆		
85	K20.00626	1297 305 012		1	KÜÇÜK GERİ VİTES	REV.IDLER GEAR		ABCDEF		◆	
85	K20.00627	1297 305 011		1	KÜÇÜK GERİ VİTES	REV.IDLER GEAR		ABCF			◆
86	K20.01655	0730 150 064		1	KÜÇÜK GERİ VİTES PULU	THRUST WASHER			◆	◆	◆

NOTES :

ABCDEF alfabetic letters are used in conjunction with the encoded parts.

NOTLAR :

ABCDEF alfabetik harfler ile kodlananparçalar birlikte kullanılır.

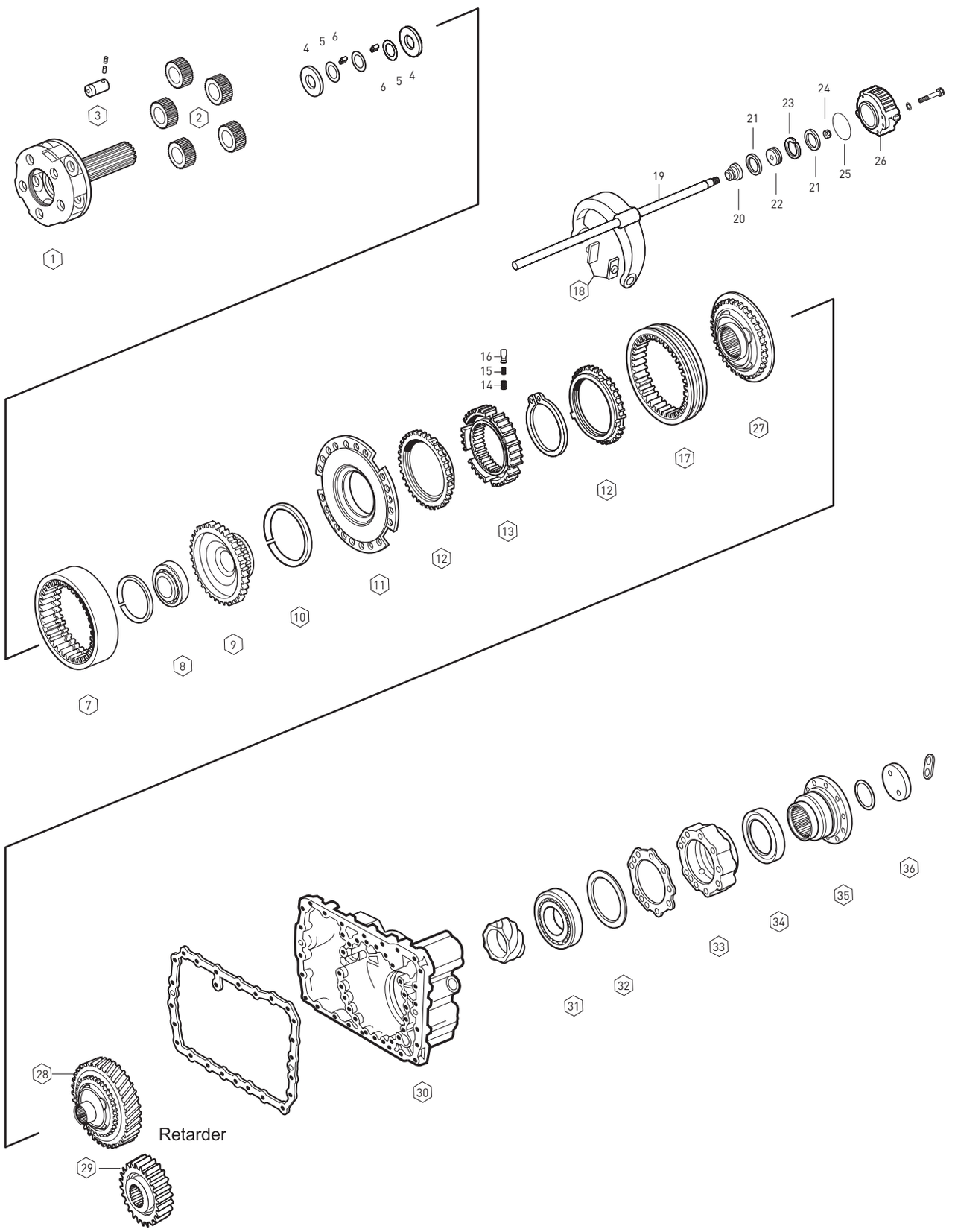

Original parts names, oem numbers, symbols and descriptions used in this catalogue are for reference purposes only.

Fig.	Kacmaz No.	Oem No	Oem Old No	Pcs.	Ürün Tanımı	Description	Sizes	Notes	SG 10.14-0.72	SG 13.80-0.84	DG 16.47-1.00
1	K20.00628	1312 232 016		1	ŞANZIMAN HEYKELİ	PLANETARY CARRIER		A	◆		
1	K20.00629	1316 232 006	(1312 232 015)	1	ŞANZIMAN HEYKELİ	PLANETARY CARRIER		B		◆	◆
2	K20.00118	1297 232 023	(1297 332 022)	5	HEYKEL KOZA DİŞLİ TAKIMI	PLANETARY GEAR SET		A	◆		
2	K20.00119	1312 232 014		5	HEYKEL KOZA DİŞLİ TAKIMI	PLANETARY GEAR SET		B		◆	◆
3	K20.00418	1297 332 109	(1297 332 005)	5	HEYKEL KOZA DİŞLİ PİMİ	PLANET SHAFT		A	◆		
3	K20.00444	1312 332 026		5	HEYKEL KOZA DİŞLİ PİMİ	PLANET SHAFT		B		◆	◆
4	K20.01511	0501 306 212		10	HEYKEL KOZA DİŞLİ PULU	THRUST WASHER		A	◆		
4	K20.01513	0501 308 981		10	HEYKEL KOZA DİŞLİ PULU	THRUST WASHER		B		◆	◆
5	K20.01512	0730 103 846		15	HEYKEL KOZA DİŞLİ PULU	THRUST WASHER		A	◆		
5	K20.01514	0730 107 168		15	HEYKEL KOZA DİŞLİ PULU	THRUST WASHER		B		◆	◆
6	K20.01454	0750 119 116		140	HEYKEL KOZA DİŞ.TANE BİL.	NEEDLE ROLLER	10X16.8mm	A	◆		
6	K20.01455	0735 470 164		140	HEYKEL KOZA DİŞ.TANE BİL.	NEEDLE ROLLER	10X15mm	B		◆	◆
7	K20.00614	1297 332 080	(1297 332 036)	1	ÇEMBER DİŞLİ	RING WHEEL		A	◆		
7	K20.00605	1295 332 086		1	ÇEMBER DİŞLİ 86 DİŞ	RING WHEEL 86 T		B		◆	◆
8	K20.01135	0635 338 035		1	PLANET ÇAN DİŞLİ BİLYASI	ROLLER BEARING	100X125X13mm		◆	◆	◆
9	K20.00630	1297 332 108		1	PLANET ÇAN DİŞLİ	CARRIER HUB		A	◆		
9	K20.00631	1297 332 020		1	PLANET ÇAN DİŞLİ 86 DİŞ	CARRIER HUB 86 T		B		◆	◆
10	K20.01656	0730 505 056	(0730 505 055)	1	ÇEMBER DİŞLİ SEGMANI	SPRING RING	3.20mm		◆	◆	◆
11	K20.00007	1296 233 006		1	TEPSİ SENKROMENÇ	FLANGE			◆	◆	◆
12	K20.00038	1296 333 045	(1296 333 022)	2	AĞIR SERİ SENK.FRENLEME	SYNCHRONIZING CONE			◆	◆	◆
13	K20.00148	1297 333 115		1	AĞIR SERİ YILDIZ DİŞLİ	GUIDE SLEEVE			◆	◆	◆
14	K20.00469	0732 040 385		9	AĞIR SERİ YILDIZ DİŞLİ YAYI	SPRING			◆	◆	◆
15	K20.00470	0732 040 386		9	AĞIR SERİ YILDIZ DİŞLİ YAYI	SPRING			◆	◆	◆
16	K20.00471	1240 304 278		9	AĞIR SERİ YILDIZ DİŞLİ FİŞEĞİ	PRESSURE PIECE			◆	◆	◆
17	K20.00039	1296 333 023	(0769 186 286)	1	AĞIR SERİ SENK.HALKA	ENGAGING SLEEVE			◆	◆	◆
18	K20.00341	1296 334 004		2	AĞIR SERİ HİLAL PABUCU	SLIDING PAD			◆	◆	◆
19		1312 234 002		1	AĞIR SERİ HİLALİ	GEAR SHIFT FORK			◆	◆	◆
20	K20.01016	0750 112 034		1	AĞIR SERİ HİLAL MİL KEÇESİ	FLANGE PACKING	25.0X38.0X14.2mm		◆	◆	◆
21	K20.01025	0750 112 097		2	AĞIR SERİ HAVA KEÇESİ	SEALING RING					◆
21	K20.01024	0734 317 150	(0750 112 019)	2	AĞIR SERİ HAVA KEÇESİ	SEALING RING	80.0X90.0X4.8mm		◆	◆	
22		1297 334 056		1	AĞIR SERİ HİLAL MİL PİSTONU	PISTON					◆
22		1296 334 039		1	AĞIR SERİ HİLAL MİL PİSTONU	PISTON			◆	◆	
23	K20.01614	0750 112 096		1	AĞIR SERİ HİLAL MİL FİBERİ	GUIDE RING					◆
23	K20.01657	0750 112 066		1	AĞIR SERİ HİLAL MİL FİBERİ	GUIDE RING			◆	◆	
24	K20.01774	0737 006 095		1	AĞIR SERİ HİLAL MİL SOMUNU	NUT	M16X1.5mm		◆	◆	◆
25		0634 313 520		1	AĞIR SERİ SİLİNDİR ORİNGİ	O-RING	96.0X3.0mm				◆
25		0634 314 019		1	AĞIR SERİ SİLİNDİR ORİNGİ	O-RING	94.0X3.0mm		◆	◆	
26	K20.01868	1297 334 055		1	AĞIR SERİ SİLİNDİR GÖVDESİ	CYLINDER					◆
26	K20.00845	1295 334 075		1	AĞIR SERİ SİLİNDİR GÖVDESİ	CYLINDER				◆	
26		1297 234 016		1	AĞIR SERİ SİLİNDİR GÖVDESİ	CYLINDER			◆		
27	K20.00075	1297 233 056		1	SERİ SENKROMENÇ	ENGAGING RING			◆	◆	◆

NOTES :

A : Alphabetical letters used in conjunction with these products are classified.
B : Alphabetical letters used in conjunction with these products are classified.

NOTLAR :

A : Alfabetik harf ile sınıflandırılan ürünler, birlikte kullanılır.
B : Alfabetik harf ile sınıflandırılan ürünler, birlikte kullanılır.

Original parts names, oem numbers, symbols and descriptions used in this catalogue are for reference purposes only.

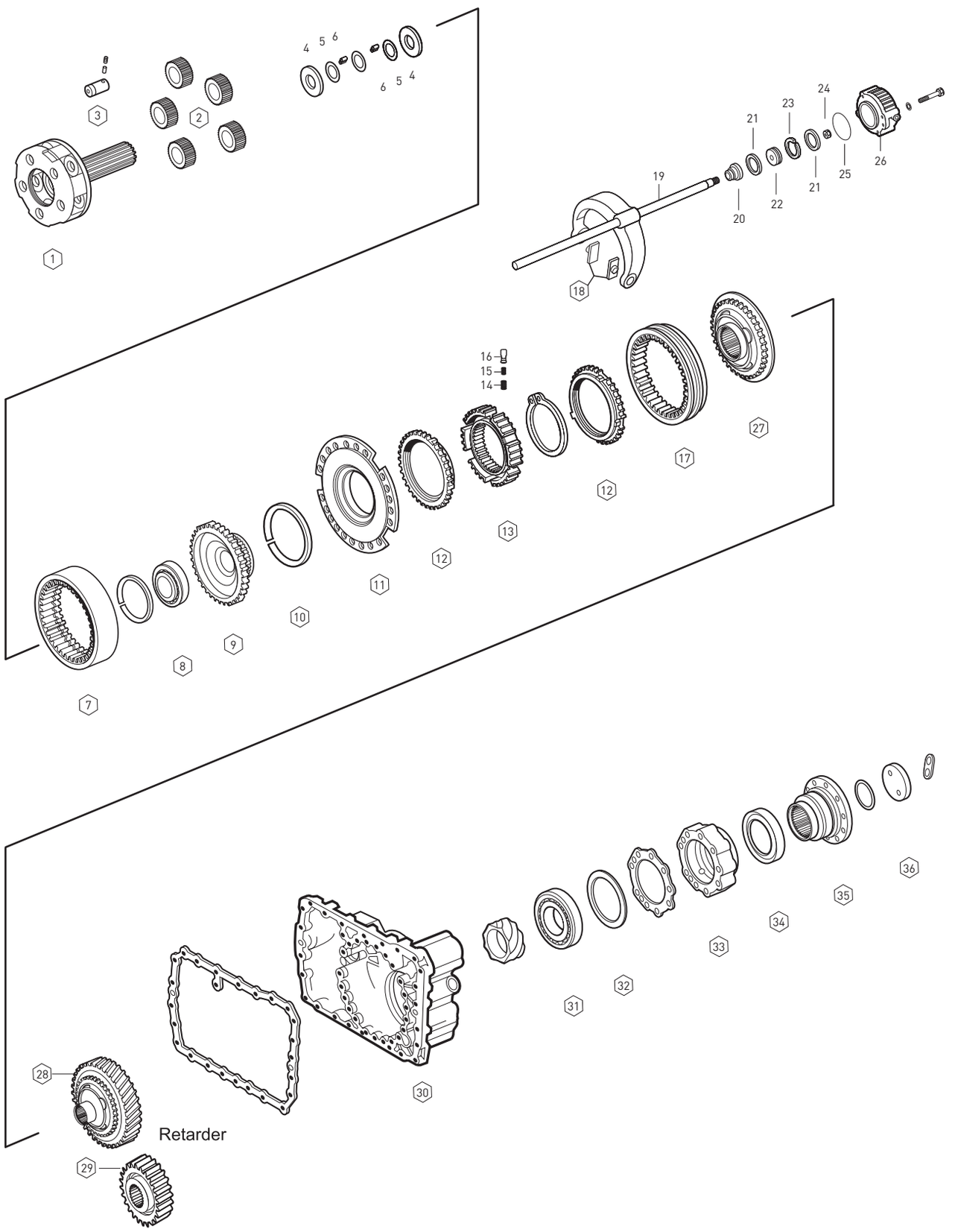

Original parts names, oem numbers, symbols and descriptions used in this catalogue are for reference purposes only.

Fig.	Kacmaz No.	Oem No	Oem Old No	Pcs.	Ürün Tanımı	Description	Sizes	Notes	SG 10.14-0.72	SG 13.80-0.84	DG 16.47-1.00
28	K20.00446	1312 333 014		1	AĞIR SERİ SENKROMENÇ	ENGAGING RING	Retarder		◆	◆	◆
29	K20.00609	1297 313 231		1	RETARDER DİŞLİSİ	GEAR	Retarder		◆	◆	◆
30		1296 301 129		1	ŞANZIMAN ARKA GÖVDE	HOUSING			◆	◆	◆
30		1313 301 008		1	ŞANZIMAN ARKA GÖVDE	HOUSING				◆	◆
31	K20.01134	0750 116 394	(0750 116 002)	1	ŞANZIMAN ARKA BİLYA	ROLLER BEARING	90X160X30mm		◆	◆	◆
32	K20.01658	0730 100 115		1	ŞANZ.ARKA BİLYA RAYNELİ	SHIM	0.30mm		◆	◆	◆
32	K20.01659	0730 100 116		1	ŞANZ.ARKA BİLYA RAYNELİ	SHIM	0.20mm		◆	◆	◆
32	K20.01660	2001660		1	ŞANZ.ARKA BİLYA RAYNELİ	SHIM	0.10mm		◆	◆	◆
33		1315 231 002	(1296 301 140)	1	ŞANZ.ARKA BİLYA KAPAĞI	BEARING COVER	OLD		◆	◆	◆
33		1315 301 220		1	ŞANZ.ARKA BİLYA KAPAĞI	BEARING COVER	NEW		◆	◆	◆
34	K20.01013	0750 111 341		1	ŞANZ.ARKA KAPAK KEÇESİ	OIL SEAL	105X130X12mm		◆	◆	
35	K20.00427	1297 333 110		1	ŞANZIMAN FLANŞI	COMPANION FLANGE	4-H, Ø180mm		◆	◆	◆
36	K20.01681	1312 332 028		1	ŞANZIMAN FLANŞ PULU	WASHER			◆	◆	◆

NOTES :

A : Alphabetical letters used in conjunction with these products are classified.
B : Alphabetical letters used in conjunction with these products are classified.

NOTLAR :

A : Alfabetik harf ile sınıflandırılan ürünler, birlikte kullanılır.
B : Alfabetik harf ile sınıflandırılan ürünler, birlikte kullanılır.

SYNCHRONIZER KIT CONST.

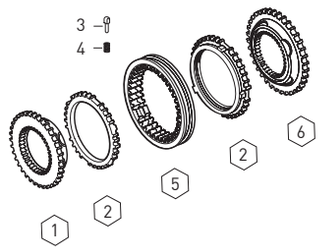

Fig.	Kacmaz No.	Oem No	Oem Old No	Pcs.	Ürün Tanımı	Description
	K20.00522	1297 298 955		Kit	TAKVİYE SENKROMENÇ KİT	SYNCHRONIZER KIT Const
1	K20.00101	1312 304 027		1	TAKVİYE SENKROMENÇ	ENGAGING RING
2	K20.00108	1297 304 484	(1297 304 402)	2	TAKVİYE SENK.FRENLEME	SYNCHRONIZING CONE
3	K20.00111	1297 304 436		3	PRİZ.YILDIZ DİŞLİ FİŞEĞİ	PRESSURE PIECE
4	K20.00110	0732 040 409		3	PRİZ.YILDIZ DİŞLİ YAYI	SPRING
5	K20.00098	1310 304 202	(1312 302 057)	1	TAKVİYE SENK.HALKA	ENGAGING SLEEVE
			(1310 304 174)			
6	K20.00097	1312 304 056		1	TAKVİYE SENKROMENÇ	ENGAGING RING

SYNCHRONIZER KIT 3rd/4th/CONST.

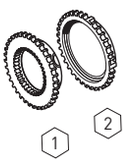

Fig.	Kacmaz No.	Oem No	Oem Old No	Pcs.	Ürün Tanımı	Description
	K20.00523	1312 204 031		Kit	TAK.3./4.VİT.SENK.KİT	SYNCH.KIT 3rd/4th/Const.
1	K20.00101	1312 304 027		1	TAK.3./4.VİT.SENKROMENÇ	ENGAGING RING
2	K20.00108	1297 304 484	(1297 304 402)	1	TAK.3./4.VİT.FRENLEME	SYNCHRONIZING CONE

SYNCHRONIZER KIT 3rd/4th

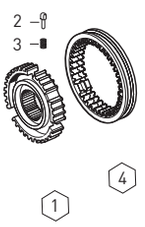

Fig.	Kacmaz No.	Oem No	Oem Old No	Pcs.	Ürün Tanımı	Description
	K20.00525	1312 204 028		Kit	3./4.VİT.HALKA YILDIZ KİTİ	SYNCH.KIT 3rd/4th
1	K20.00181	1312 304 052		1	3./4.VİT.YILDIZ DİŞLİ	GUIDE SLEEVE
2	K20.00111	1297 304 436		3	PRİZ.YILDIZ DİŞLİ FİŞEĞİ	PRESSURE PIECE
3	K20.00110	0732 040 409		3	PRİZ.YILDIZ DİŞLİ YAYI	SPRING
4	K20.00098	1310 304 202	(1312 302 057)	1	TAKVİYE SENK.HALKA	ENGAGING SLEEVE
			(1310 304 174)			

SYNCHRONIZER KIT 3rd/4th

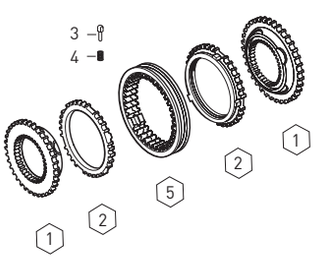

Fig.	Kacmaz No.	Oem No	Oem Old No	Pcs.	Ürün Tanımı	Description
	K20.00524	1315 298 030		Kit	3./4.VİT.SENKROMENÇ KİT	SYNCH.KIT 3rd/4th
1	K20.00101	1312 304 027		2	3./4.VİT.SENKROMENÇ	ENGAGING RING
2	K20.00108	1297 304 484	(1297 304 402)	2	3./4.VİT.SENK.FRENLEME	SYNCHRONIZING CONE
3	K20.00111	1297 304 436		3	PRİZ.YILDIZ DİŞLİ FİŞEĞİ	PRESSURE PIECE
4	K20.00110	0732 040 409		3	PRİZ.YILDIZ DİŞLİ YAYI	SPRING
5	K20.00098	1310 304 202	(1312 302 057)	1	3./4.VİT.SENK.HALKA	ENGAGING SLEEVE
			(1310 304 174)			

SYNCHRONIZER KIT 3rd/4th

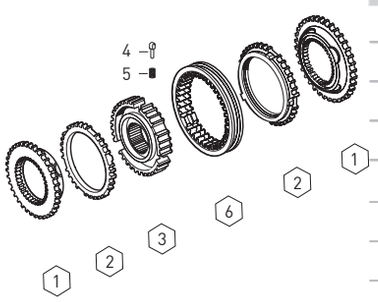

Fig.	Kacmaz No.	Oem No	Oem Old No	Pcs.	Ürün Tanımı	Description
	K20.00383	1315 298 018		Kit	3./4.VİT.SENKROMENÇ KİT	SYNCH.KIT 3rd/4th
1	K20.00101	1312 304 027		2	3./4.VİT.SENKROMENÇ	ENGAGING RING
2	K20.00108	1297 304 484	(1297 304 402)	2	3./4.VİT.SENK.FRENLEME	SYNCHRONIZING CONE
3	K20.00181	1312 304 052		1	3./4.VİT.YILDIZ DİŞLİ	GUIDE SLEEVE
4	K20.00111	1297 304 436		3	PRİZ.YILDIZ DİŞLİ FİŞEĞİ	PRESSURE PIECE
5	K20.00110	0732 040 409		3	PRİZ.YILDIZ DİŞLİ YAYI	SPRING
6	K20.00098	1310 304 202	(1312 302 057)	1	3./4.VİT.SENK.HALKA	ENGAGING SLEEVE
			(1310 304 174)			

Original parts names, oem numbers, symbols and descriptions used in this catalogue are for reference purposes only.

Fig.	Kacmaz No.	Oem No	Oem Old No	Pcs.	Ürün Tanımı	Description
	K20.00088	1315 298 061		Kit	3./4.VİT.SENKROMENÇ KİT	SYNCH.KIT 3rd/4th
1	K20.00102	1316 304 159	(1316 304 145)	2	3./4.VİT.SENKROMENÇ	ENGAGING RING
2	K20.00109	1316 304 168	(1316 304 149)	2	3./4.VİT.SENK.FRENLEME	SYNCHRONIZING CONE
3	K20.00136	1316 304 162		1	3./4.VİT.YILDIZ DİŞLİ	GUIDE SLEEVE
4	K20.00111	1297 304 436		3	PRİZ.YILDIZ DİŞLİ FİŞEĞİ	PRESSURE PIECE
5	K20.00110	0732 040 409		3	PRİZ.YILDIZ DİŞLİ YAYI	SPRING
6	K20.00103	1316 304 167	(1315 304 135)	1	3./4.VİT.SENK.HALKA	ENGAGING SLEEVE

SYNCHRONIZER KIT 3rd/4th

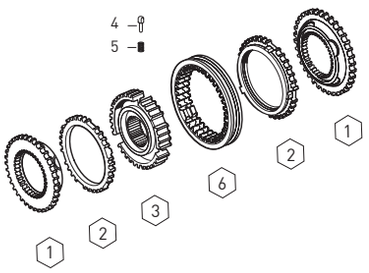

Fig.	Kacmaz No.	Oem No	Oem Old No	Pcs.	Ürün Tanımı	Description
	K20.00794	1316 204 016	(1316 204 014)	Kit	3./4.VİT.FRENLEME KİTİ	SYNCH.KIT 3rd/4th
1	K20.00109	1316 304 168	(1316 304 149)	2	3./4.VİT.SENK.FRENLEME	SYNCHRONIZING CONE
2	K20.00136	1316 304 162		1	3./4.VİT.YILDIZ DİŞLİ	GUIDE SLEEVE
3	K20.00111	1297 304 436		3	PRİZ.YILDIZ DİŞLİ FİŞEĞİ	PRESSURE PIECE
4	K20.00110	0732 040 409		3	PRİZ.YILDIZ DİŞLİ YAYI	SPRING
5	K20.00103	1316 304 167	(1315 304 135)	1	TAKVİYE SENK.HALKA	ENGAGING SLEEVE

SYNCHRONIZER KIT 3rd/4th

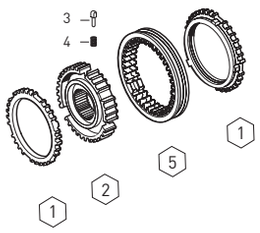

Fig.	Kacmaz No.	Oem No	Oem Old No	Pcs.	Ürün Tanımı	Description
	K20.00482	1315 204 006	(1312 298 911)	Kit	1./2.VİT.SENKROMENÇ KİT	SYNCH.KIT 1st/2nd
1	K20.00143	1312 304 106		2	1./ 2.VİT.SENKROMENÇ	ENGAGING RING
2	K20.00144	1268 304 424		2	1./ 2.VİT.SENK.FRENLEME	SYNCHRONIZING CONE
3	K20.00302	1268 304 494	(1268 304 491)	2	1./ 2.VİT.SENK.FRENLEME	INTERMEDIATE CONE
4	K20.00145	1268 304 525		2	1./ 2.VİT.SENK.FRENLEME	SYNCHRONIZING CONE
5	K20.00146	1312 304 158		1	1./ 2.VİT.YILDIZ DİŞLİ	GUIDE SLEEVE
6	K20.00209	1312 304 159		3	1./ 2.VİT.YIL.DİŞLİ BAKLASI	SLIDING BLOCK
7	K20.00111	1297 304 436		3	PRİZ.veYILDIZ DİŞLİ FİŞEĞİ	PRESSURE PIECE
8	K20.00110	0732 040 409		3	PRİZ.ve YILDIZ DİŞLİ YAYI	SPRING
9	K20.00147	1310 304 175	(1312 304 157)	1	1./ 2.VİT.SENK.HALKA	ENGAGING SLEEVE

SYNCHRONIZER KIT 1st/2nd

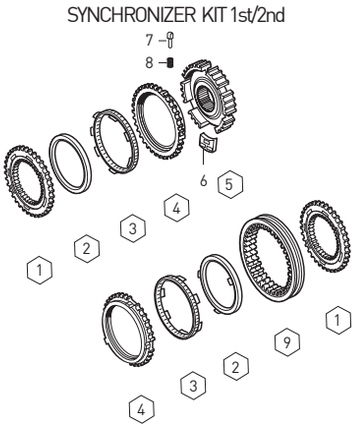

Fig.	Kacmaz No.	Oem No	Oem Old No	Pcs.	Ürün Tanımı	Description
	K20.00511	1297 298 912		Kit	AĞIR SERİ DİŞLİ TAKIMI	PLANETARY GEAR KIT
1	K20.00118	1297 232 023	(1297 332 022)	5	HEYKEL KOZA DİŞLİSİ	PLANETARY GEAR
2	K20.00418	1297 332 109	(1297 332 005)	5	HEYKEL KOZA DİŞLİ PİMİ	PLANETARY SHAFT
3	K20.01511	0501 306 212		10	HEYKEL KOZA DİŞLİ PULU	THRUST WASHER
4	K20.01512	0730 103 846		15	HEYKEL KOZA DİŞLİ PULU	THRUST WASHER
5	K20.01453	0750 119 109		120	HEYKEL KOZA DİŞ.BİLYASI	NEEDLE ROLLER (10X16.8)

PLANETARY GEAR KIT

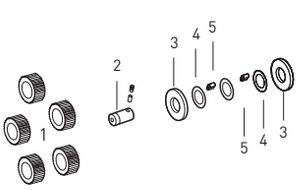

Original parts names, oem numbers, symbols and descriptions used in this catalogue are for reference purposes only.

SYNCHRONIZER KIT PLANETARY

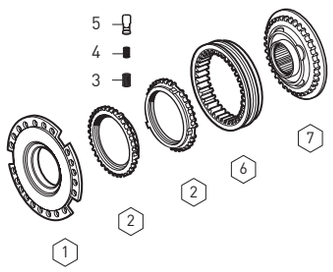

Fig.	Kacmaz No.	Oem No	Oem Old No	Pcs.	Ürün Tanımı	Description
	K20.00519	1295 298 962		Kit	AĞIR SERİ SENK.KİT	SYNCHRONIZER KIT
1	K20.00007	1296 233 006		1	TEPSİ SENKROMENÇ	FLANGE
2	K20.00038	1296 333 045	(1296 333 022)	2	AĞIR SERİ FRENLEME	SYNCHRONIZING CONE
3	K20.00469	0732 040 385		9	AĞIR SERİ YILDIZ DİŞLİ YAYI	SPRING
4	K20.00470	0732 040 386		9	AĞIR SERİ YILDIZ DİŞLİ YAYI	SPRING
5	K20.00471	1240 304 278		9	AĞIR SERİ YILDIZ DİŞ.FİŞEĞİ	PRESSURE PIECE
6	K20.00039	1296 333 023		1	AĞIR SERİ SENK.HALKA	ENGAGING SLEEVE
7	K20.00075	1297 233 056		1	SERİ SENKROMENÇ	ENGAGING RING

SYNCHRONIZER KIT PLANETARY

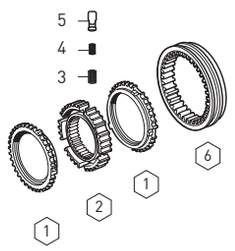

Fig.	Kacmaz No.	Oem No	Oem Old No	Pcs.	Ürün Tanımı	Description
	K20.00538	1316 233 017		Kit	AĞIR SERİ SENK.KİT	SYNCHRONIZER KIT
1	K20.00038	1296 333 045	(1296 333 022)	2	AĞIR SERİ FRENLEME	SYNCHRONIZING CONE
2	K20.00148	1297 333 115		1	AĞIR SERİ YILDIZ DİŞLİ	GUIDE SLEEVE
3	K20.00469	0732 040 385		9	AĞIR SERİ YILDIZ DİŞLİ YAYI	SPRING
4	K20.00470	0732 040 386		9	AĞIR SERİ YILDIZ DİŞLİ YAYI	SPRING
5	K20.00471	1240 304 278		9	AĞIR SERİ YILDIZ DİŞ.FİŞEĞİ	PRESSURE PIECE
6	K20.00039	1296 333 023		1	AĞIR SERİ SENK.HALKA	ENGAGING SLEEVE

GEARBOX GASKET KIT

Fig.	Kacmaz No.	Oem No	Oem Old No	Pcs.	Ürün Tanımı	Description
1	K20.01584	1295 298 915		Kit	ŞANZIMAN CONTA TAKIMI	GASKET KIT
2		1313 301 038		1	ŞANZ.ÖN GÖVDE CONTASI	GASKET
3		1313 302 014		1	PRİZ.KEÇE KAPAK CONTASI	GASKET
4		1313 306 012		1	ŞANZ.HİLALİ KAPAK CONTASI	GASKET
5		1313 307 002		1	ŞANZ.ÖN GÖVDE ARKA CONTA	GASKET
5		1313 307 020		2	ŞANZ.KULE KAPAK CONTASI	GASKET
5		1313 307 003		1	ŞANZ.KULE KAPAK CONTASI	GASKET
5		1313 307 004		1	ŞANZ.KULE ALT KAPAK CONTASI	GASKET
5		1313 307 022		1	ŞANZ.KULE ÜST KAPAK CONTASI	GASKET
6		1313 301 037		1	ŞANZ.ARKA GÖVDE CONTASI	GASKET
7		1313 301 036		1	ŞANZ.BİLYA KAPAK CONTASI	GASKET
8	K20.02108	1238 308 201		1	PTO BAĞLANTI KAPAK CONTASI	GASKET
9		1313 307 005		1	ŞANZ.İSTİNAT KAPAK CONTASI	GASKET
10		1313 307 006		1	ŞANZ.İSTİNAT KAPAK CONTASI	GASKET

Original parts names, oem numbers, symbols and descriptions used in this catalogue are for reference purposes only.

Fig.	Kacmaz No.	Oem No	Oem Old No	Pcs.	Ürün Tanımı	Description
1		1296 313 131		1	P.KİLİT EMNİYET SACI	RETAINING RING
2		0730 104 627		1	PARÇALI KİLİT	SPLIT RING
3		1296 313 238		1	PTO MİL KOVANI	SLIDING SLEEVE
4		0730 104 628		1	PTO DİŞLİ AYAR PULU	THRUST WASHER
5		1296 313 082		1	PTO DİŞLİ	GEAR 33 T
5		1296 313 083		1	PTO DİŞLİ	GEAR 36 T
5		1296 313 084		1	PTO DİŞLİ	GEAR 38 T
5		1296 313 085		1	PTO DİŞLİ	GEAR 39 T
5		1296 313 086		1	PTO DİŞLİ	GEAR 46 T
6	K20.00556	1296 213 028		1	PTO MİLİ DÜZ	INTERM.SHAFT
7	K20.00555	1296 213 028		1	PTO MİLİ FREZELİ	INTERM.SHAFT (Milled)
8		1296 313 125		1	PTO MİL SOMUNU	NUT
9		0735 410 139		1	PTO MİL BİLYASI	ROLLER BEARING
10		7429 032 102		1	PTO BİLYA KAPAK PULU	THRUST WASHER
11		1232 304 062		1	PTO BİLYA KAPAK RAYNELİ	SHIM (1.00mm)
11		1232 304 063		1	PTO BİLYA KAPAK RAYNELİ	SHIM (0.90mm)
11		1232 304 072		1	PTO BİLYA KAPAK RAYNELİ	SHIM (0.70mm)
12		1250 313 190		1	PTO BAĞLANTI KAPAĞI	COVER
13	K20.01013	0750 111 341		1	ŞANZ.ARKA KAPAK KEÇESİ	OIL SEAL

P.T.O. (POWER TAKE OFF)

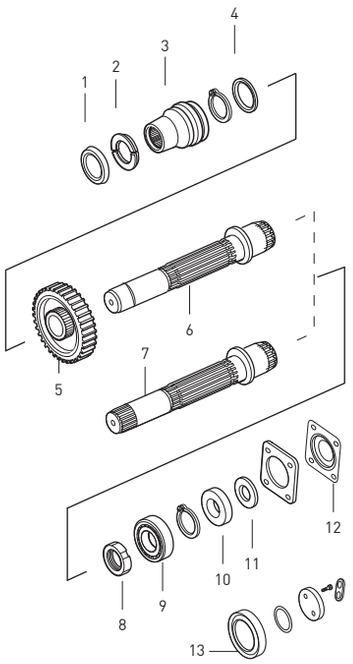

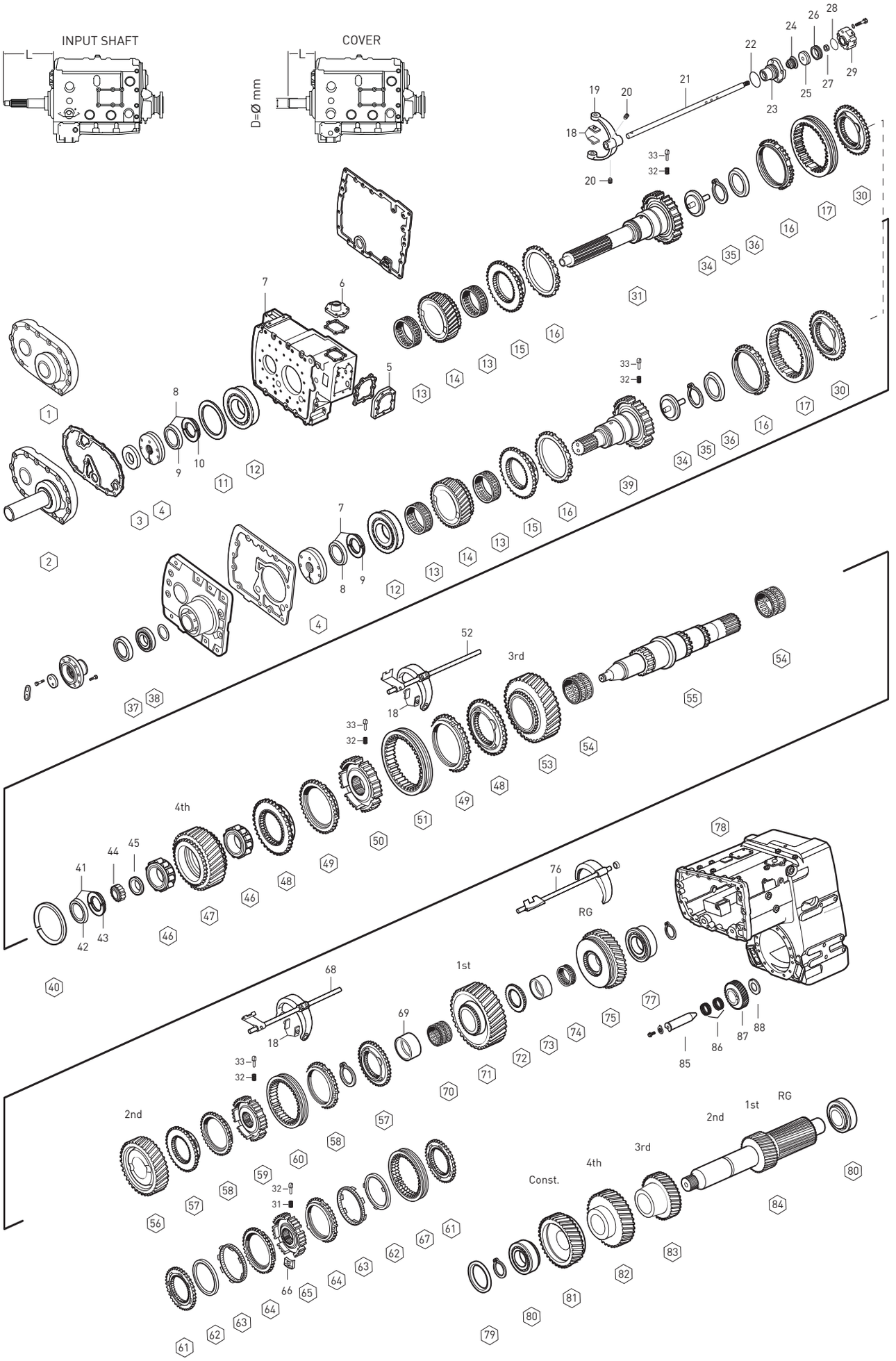

Original parts names, oem numbers, symbols and descriptions used in this catalogue are for reference purposes only.

Fig.	Kacmaz No.	Oem No	Oem Old No	Pcs.	Ürün Tanımı	Description	Sizes	Notes	
1		1312 302 064		1	PRİZDİREK KEÇE KAPAĞI	COVER	L= 80 D=68	A	◆
2		1312 302 036		1	PRİZDİREK KEÇE KAPAĞI	COVER	L=170 D=60	B	◆
3	K20.01003	0734 310 387	(0734 310 386)	1	PRİZDİREK KEÇESİ	OIL SEAL	55X75X8mm		◆
4	K20.00484	1295 202 041		1	YAĞ POMPASI	OIL PUMP			◆
5	K20.00561	1295 307 479		1	ŞANZIMAN KULE KAPAĞI	COVER			◆
6	K20.00597	1295 307 434		1	ŞANZIMAN KULE KAPAĞI	COVER			◆
7		1312 301 020	(1312 301 006)	1	ŞANZIMAN ÖN GÖVDE	HOUSING		A	◆
7		1312 301 021	(1312 301 007)	1	ŞANZIMAN ÖN GÖVDE	HOUSING		B	◆
7		1312 301 026		1	ŞANZIMAN ÖN GÖVDE	HOUSING		C	◆
8	K20.01662	1499 298 135		1	EMN.SACI VE P.KİLİT TAK.	SIPLIT RING KIT	4.30mm	(1)	◆
8	K20.01664	1499 298 133		1	EMN.SACI VE P.KİLİT TAK.	SIPLIT RING KIT	4.20mm	(2)	◆
8	K20.01666	1499 298 131		1	EMN.SACI VE P.KİLİT TAK.	SIPLIT RING KIT	4.10mm	(3)	◆
8	K20.01555	1499 298 129		1	EMN.SACI VE P.KİLİT TAK.	SIPLIT RING KIT	4.00mm	(4)	◆
8	K20.01557	1499 298 127		1	EMN.SACI VE P.KİLİT TAK.	SIPLIT RING KIT	3.90mm	(5)	◆
8	K20.01559	1499 298 125		1	EMN.SACI VE P.KİLİT TAK.	SIPLIT RING KIT	3.80mm	(6)	◆
9	K20.01554	0730 061 816		1	P. KİLİT EMNİYET SACI	RETAINING RING			◆
10	K20.01663	0730 106 168		2	PARÇALI KİLİT	SIPLIT RING	4.30mm		◆
10	K20.01665	0730 106 166		2	PARÇALI KİLİT	SIPLIT RING	4.20mm		◆
10	K20.01667	0730 106 164		2	PARÇALI KİLİT	SIPLIT RING	4.10mm		◆
10	K20.01556	0730 106 162		2	PARÇALI KİLİT	SIPLIT RING	4.00mm		◆
10	K20.01558	0730 106 160		2	PARÇALI KİLİT	SIPLIT RING	3.90mm		◆
10	K20.01560	0730 106 158		2	PARÇALI KİLİT	SIPLIT RING	3.80mm		◆
11	K20.01668	0730 005 748		1	PRİZ.ÖN BİLYA RAYNELİ	SHIM	0.90mm		◆
11	K20.01669	0730 005 743		1	PRİZ.ÖN BİLYA RAYNELİ	SHIM	0.65mm		◆
11	K20.01670	2050 309 066		1	PRİZ.ÖN BİLYA RAYNELİ	SHIM	0.50mm		◆
11	K20.01671	2050 309 067		1	PRİZ.ÖN BİLYA RAYNELİ	SHIM	0.30mm		◆
11	K20.01582	0730 005 747		1	PRİZ.ÖN BİLYA RAYNELİ	SHIM	0.25mm		◆
11	K20.01672	2050 309 068		1	PRİZ.ÖN BİLYA RAYNELİ	SHIM	0.20mm		◆
11	K20.01673	2001673		1	PRİZ.ÖN BİLYA RAYNELİ	SHIM	0.10mm		◆
12	K20.01103	0750 117 431		1	PRİZDİREK ÖN BİLYA	ROLLER BEARING	75X150X30.5mm		◆
13	K20.01325	0735 320 950		2	PRİZ. MASURA BİLYA	NEEDLE CAGE	93X101X32.5mm		◆
14	K20.00121	1312 302 073		1	OVARDİRE DİŞLİSİ 34 DİŞ	CONSTANT GEAR 34 T			◆
15	K20.00101	1312 304 027		1	TAKVİYE SENKROMENÇ	ENGAGING RING			◆
16	K20.00108	1297 304 484	(1297 304 402)	2	TAKVİYE SENK.FRENLEME	SYNCHRONIZING CONE			◆
17	K20.00098	1310 304 202	(1312 302 057)	1	TAKVİYE SENK.HALKA	ENGAGING SLEEVE			◆
			(1310 304 174)						
18	K20.00204	1297 306 120		6	TAHVİYE HİLAL PABUCU	SLIDING PAD			◆
19		1313 312 002		1	TAKVİYE HİLALİ	G.SHIFT FORK			◆
20	K20.01688	1315 312 047		2	TAKVİYE HİLAL VİDASI	SCREW	M12X1.0mm		◆
21		1312 312 008		1	TAKVİYE HİLAL MİLİ	G.SHIFT RAIL			◆
22		0634 313 671		1	TAKVİYE SİLİNDİR ORİNGİ	O-RING	80.0X3.0mm		◆

NOTES :

ABCD alfabetic letters are used in conjunction with the encoded parts.

(1) This kit includes (1499 298 135) = 2pcs 0730 106 168 + 1pcs 0730 061 816
(2) This kit includes (1499 298 133) = 2pcs 0730 106 166 + 1pcs 0730 061 816
(3) This kit includes (1499 298 131) = 2pcs 0730 106 164 + 1pcs 0730 061 816
(4) This kit includes (1499 298 129) = 2pcs 0730 106 162 + 1pcs 0730 061 816
(5) This kit includes (1499 298 127) = 2pcs 0730 106 160 + 1pcs 0730 061 816
(6) This kit includes (1499 298 125) = 2pcs 0730 106 158 + 1pcs 0730 061 816

NOTLAR :

ABCD alfabetik harfler ile kodlananparçalar birlikte kullanılır.

(1) (1499 298 135) nolu kit bu parçalardan oluşur = 2pcs 0730 106 168 + 1pcs 0730 061 816
(2) (1499 298 133) nolu kit bu parçalardan oluşur = 2pcs 0730 106 166 + 1pcs 0730 061 816
(3) (1499 298 131) nolu kit bu parçalardan oluşur = 2pcs 0730 106 164 + 1pcs 0730 061 816
(4) (1499 298 129) nolu kit bu parçalardan oluşur = 2pcs 0730 106 162 + 1pcs 0730 061 816
(5) (1499 298 127) nolu kit bu parçalardan oluşur = 2pcs 0730 106 160 + 1pcs 0730 061 816
(6) (1499 298 125) nolu kit bu parçalardan oluşur = 2pcs 0730 106 158 + 1pcs 0730 061 816

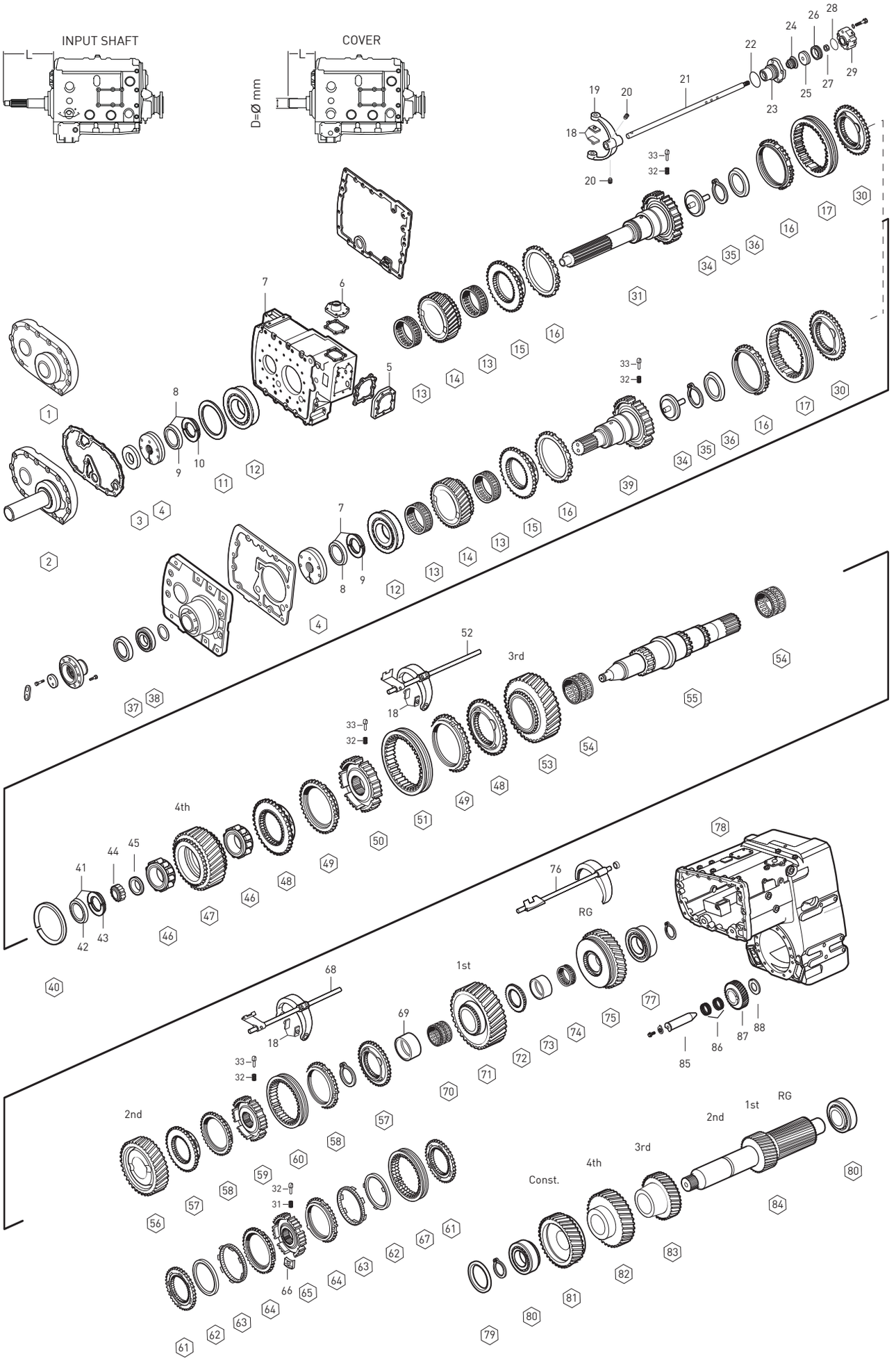

Original parts names, oem numbers, symbols and descriptions used in this catalogue are for reference purposes only.

Fig.	Kacmaz No.	Oem No	Oem Old No	Pcs.	Ürün Tanımı	Description	Sizes	Notes	
23	K20.01738	1296 312 042	(1296 312 016)	1	TAKVİYE SİLİNDİR GÖVDESİ	CYLINDER			◆
24	K20.01016	0750 112 034		1	TAKVİYE HİLAL MİL KEÇESİ	FLANGE PACKING	25.0X38.0X14.2mm		◆
25		1312 312 003	(1296 312 056)	1	TAKVİYE HİLAL MİL PİSTONU	PISTON			◆
26	K20.01021	0750 112 089		1	TAKVİYE HAVA KEÇESİ	DOUBLE PACKING	53.0X63.0X16.2mm		◆
27	K20.01774	0737 006 095		1	TAKVİYE HİLAL MİL SOMUNU	NUT	M16X1.5mm		◆
28		0634 314 018		1	TAKVİYE SİLİNDİR ORİNGİ	O-RING	59.0X2.0mm		◆
29		0750 132 032		1	TAKVİYE VENTİLİ	5/2 WAY VALVE		AC	◆
29		1295 212 009	(0501 204 597)	1	TAKVİYE VENTİLİ	5/2 WAY VALVE		B	◆
30	K20.00097	1312 304 056		1	TAKVİYE SENKROMENÇ	ENGAGING RING			◆
31	K20.00539	1312 202 035	(1312 202 032)	1	PRİZDİREK	INPUT SHAFT	L=320 SAE 2	A	◆
31	K20.00116	1312 202 037	(1312 202 026)	1	PRİZDİREK	INPUT SHAFT	L=320 SAE 2	B	◆
31	K20.00540	1312 202 040	(1312 202 027)	1	PRİZDİREK	INPUT SHAFT		C	◆
32	K20.00110	0732 040 409		9	PRİZ.ve YILDIZ DİŞLİ YAYI	SPRING			◆
33	K20.00111	1297 304 436		9	PRİZ.veYILDIZ DİŞLİ FİŞEĞİ	PRESSURE PIECE			◆
34	K20.01504	1315 302 196		1	PRİZDİREK YAĞ PİPETİ	OIL PIPET			◆
35	K20.01505	0630 502 027		1	PRİZDİREK SEKMANI	RETANING RING	472/50X2mm		◆
36	K20.01011	0501 314 060		1	PRİZDİREK ARKA KEÇE	OIL SEAL			◆
37	K20.01007	0734 319 276		1	PRİZDİREK ÖN KEÇE	OIL SEAL	75X105X14mm	D	◆
38	K20.01136	0750 117 312		1	ŞANZ.KAPAK BİLYASI	ROLLER BEARING	50.8X104.7X30.1mm	D	◆
39	K20.00536	1312 202 041	(1312 202 031)	1	PRİZDİREK (Kısa Tip)	INPUT SHAFT (Short Type)		D	◆
40	K20.01523	0730 005 468		1	SENKROMENÇ AYAR SEKMANI	RING	4.00mm		◆
40	K20.01524	0730 005 466		1	SENKROMENÇ AYAR SEKMANI	RING	3.60mm		◆
41	K20.01561	1499 298 027		1	EMN.SACI VE P.KİLİT TAK.	SIPLIT RING KIT	5.00mm	(7)	◆
41	K20.01563	1499 298 026		1	EMN.SACI VE P.KİLİT TAK.	SIPLIT RING KIT	4.90mm	(8)	◆
41	K20.01580	2001580		1	EMN.SACI VE P.KİLİT TAK.	SIPLIT RING KIT	4.85mm	(9)	◆
41	K20.01565	1499 298 025		1	EMN.SACI VE P.KİLİT TAK.	SIPLIT RING KIT	4.80mm	(10)	◆
41	K20.01567	1499 298 024		1	EMN.SACI VE P.KİLİT TAK.	SIPLIT RING KIT	4.70mm	(11)	◆
41	K20.01569	1499 298 023		1	EMN.SACI VE P.KİLİT TAK.	SIPLIT RING KIT	4.60mm	(12)	◆
42	K20.01571	0730 062 781		1	P. KİLİT EMNİYET SACI	RETAINING RING			◆
43	K20.01562	0730 107 023		2	PARÇALI KİLİT	SIPLIT RING	5.00mm		◆
43	K20.01564	0730 107 022		2	PARÇALI KİLİT	SIPLIT RING	4.90mm		◆
43	K20.01581	2001581		2	PARÇALI KİLİT	SIPLIT RING	4.85mm		◆
43	K20.01566	0730 107 021		2	PARÇALI KİLİT	SIPLIT RING	4.80mm		◆
43	K20.01568	0730 107 020		2	PARÇALI KİLİT	SIPLIT RING	4.70mm		◆
43	K20.01570	0730 107 019		2	PARÇALI KİLİT	SIPLIT RING	4.60mm		◆
44	K20.01109	0750 117 232		1	KAMALI MİL UÇ BİLYA	ROLLER BEARING	42X40.3mm		◆
45	K20.01527	1315 304 048		1	KAMALI MİL UÇ BİLYA PULU	THRUST WASHER	8.00mm		◆
45	K20.01528	1315 304 047		1	KAMALI MİL UÇ BİLYA PULU	THRUST WASHER	7.90mm		◆
45	K20.01529	1315 304 046		1	KAMALI MİL UÇ BİLYA PULU	THRUST WASHER	7.80mm		◆
46	K20.01112	0750 118 258		2	4.VİTES DİŞLİ MAS.BİLYA	ROLLER BEARING	67X101X38mm		◆
47	K20.00133	1312 304 032		1	4.VİTES DİŞLİSİ 30 DİŞ	GEAR 4th 30 T		ABCD	◆

NOTES :

ABCD alfabetic letters are used in conjunction with the encoded parts.

(7) This kit includes (1499 298 027) = 2pcs 0730 107 023 + 1pcs 0730 062 781
(8) This kit includes (1499 298 026) = 2pcs 0730 107 022 + 1pcs 0730 062 781
(9) This kit includes (2001580) = 2pcs 2001581 + 1pcs 0730 062 781
(10) This kit includes (1499 298 025) = 2pcs 0730 107 021 + 1pcs 0730 062 781
(11) This kit includes (1499 298 024) = 2pcs 0730 107 020 + 1pcs 0730 062 781
(12) This kit includes (1499 298 023) = 2pcs 0730 107 019 + 1pcs 0730 062 781

NOTLAR :

ABCD alfabetik harfler ile kodlananparçalar birlikte kullanılır.

(7) (1499 298 027) nolu kit bu parçalardan oluşur = 2pcs 0730 107 023 + 1pcs 0730 062 781
(8) (1499 298 026) nolu kit bu parçalardan oluşur = 2pcs 0730 107 022 + 1pcs 0730 062 781
(9) (2001580) nolu kit bu parçalardan oluşur = 2pcs 2001581 + 1pcs 0730 062 781
(10) (1499 298 025) nolu kit bu parçalardan oluşur = 2pcs 0730 107 021 + 1pcs 0730 062 781
(11) (1499 298 024) nolu kit bu parçalardan oluşur = 2pcs 0730 107 020 + 1pcs 0730 062 781
(12) (1499 298 023) nolu kit bu parçalardan oluşur = 2pcs 0730 107 019 + 1pcs 0730 062 781

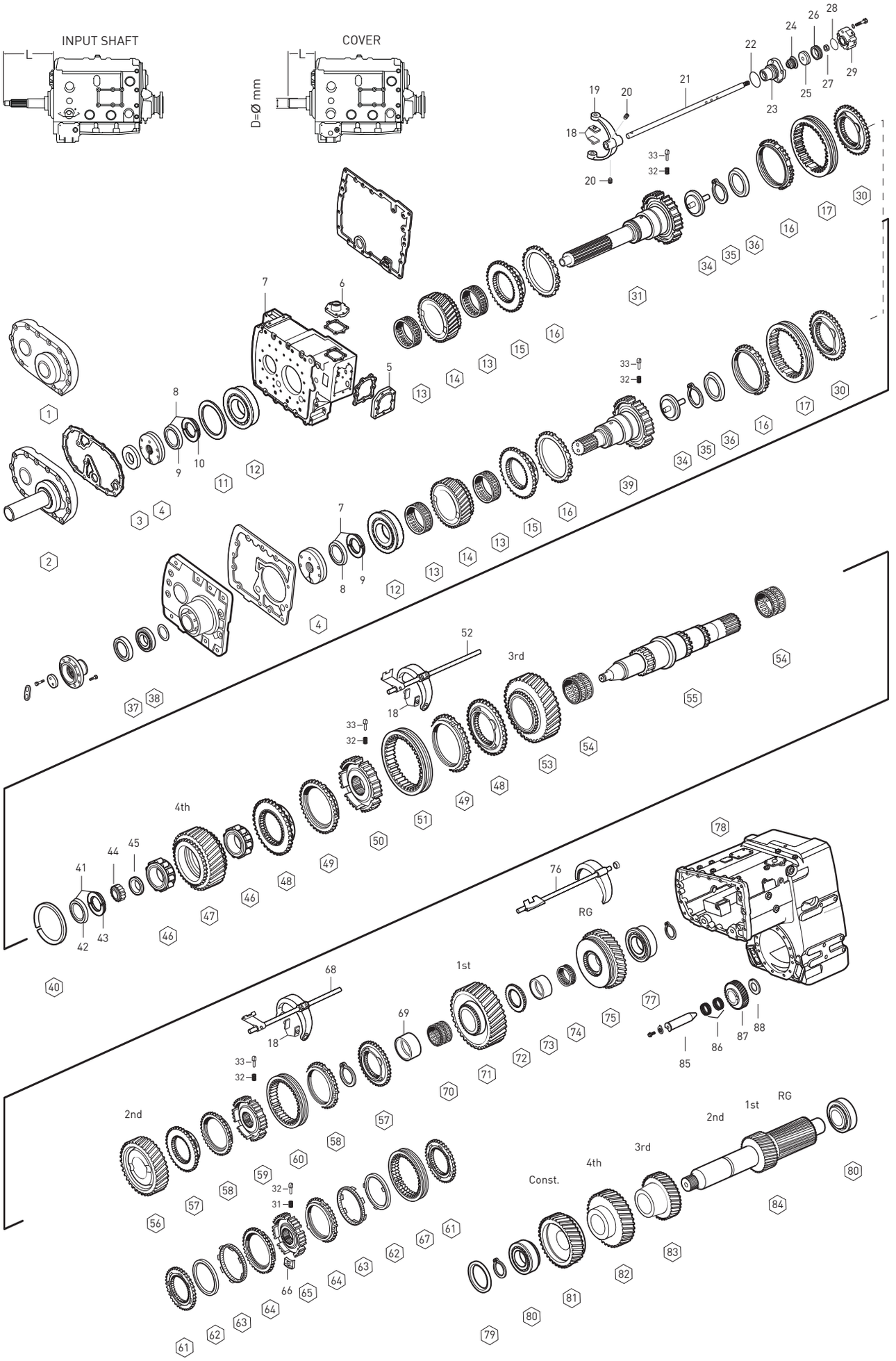

Original parts names, oem numbers, symbols and descriptions used in this catalogue are for reference purposes only.

Fig.	Kacmaz No.	Oem No	Oem Old No	Pcs.	Ürün Tanımı	Description	Sizes	Notes	SG 13.80-0.84
47	K20.00134	1312 304 031		1	4.VİTES DİŞLİSİ 34 DİŞ	GEAR 4th 34 T		BD	◆
48	K20.00102	1316 304 159	(1316 304 145)	2	3./ 4.VİT.SENKROMENÇ	ENGAGING RING			◆
49	K20.00109	1316 304 168	(1316 304 149)	2	3./ 4.VİT.SENK.FRENLEME	SYNCHRONIZING CONE			◆
50	K20.00136	1316 304 162		1	3./ 4.VİT.YILDIZ DİŞLİ	GUIDE SLEEVE			◆
51	K20.00103	1316 304 167	(1315 304 135)	1	3./ 4.VİT.SENK.HALKA	ENGAGING SLEEVE			◆
52		1312 206 036		1	3./4.VİTES HİLALİ	GEAR SHIFT FORK 3rd/4th		AB	◆
52		1312 206 046		1	3./4.VİTES HİLALİ	GEAR SHIFT FORK 3rd/4th		C	◆
53	K20.00138	1312 304 137		1	3.VİTES DİŞLİSİ 32 DİŞ	GEAR 3rd 32 T		ABCD	◆
53	K20.00139	1312 304 136		1	3.VİTES DİŞLİSİ 34 DİŞ	GEAR 3rd 34 T		BD	◆
54	K20.01326	0750 115 303	(0735 321 094)	2	2./3.VİT.MASURA BİLYA	NEEDLE CAGE	92X100X63mm		◆
55	K20.00184	1312 304 133		1	KAMALI MİL	MAIN SHAFT		ABCD	◆
56	K20.00141	1312 304 141		1	2.VİTES DİŞLİSİ 37 DİŞ	GEAR 2nd 37 T		ABCD	◆
56	K20.00142	1312 304 139		1	2.VİTES DİŞLİSİ 38 DİŞ	GEAR 2nd 38 T		BD	◆
57	K20.00183	1316 304 156		2	1./ 2.VİT.SENKROMENÇ	ENGAGING RING		C	◆
58	K20.00113	1316 304 170	(1316 304 150)	2	1./ 2.VİT.SENK.FRENLEME	SYNCHRONIZING CONE		C	◆
59	K20.00180	1316 304 163		1	1./ 2.VİT.YILDIZ DİŞLİ	GUIDE SLEEVE		C	◆
60	K20.00114	1316 304 169	(1315 304 136)	1	1./ 2.VİT.SENK.HALKA	ENGAGING SLEEVE		C	◆
61	K20.00143	1312 304 106		2	1./ 2.VİT.SENKROMENÇ	ENGAGING RING		ABD	◆
62	K20.00144	1268 304 424		2	1./ 2.VİT.SENK.FRENLEME	SYNCHRONIZING CONE		ABD	◆
63	K20.00302	1268 304 494	(1268 304 491)	2	1./ 2.VİT.SENK.FRENLEME	INTERMEDIATE CONE		ABD	◆
64	K20.00145	1268 304 525		2	1./ 2.VİT.SENK.FRENLEME	SYNCHRONIZING CONE		ABD	◆
65	K20.00146	1312 304 158		1	1./ 2.VİT.YILDIZ DİŞLİ	GUIDE SLEEVE		ABD	◆
66	K20.00209	1312 304 159		3	1./ 2.VİT.YILDIZ DİŞ.BAKLASI	SLIDING BLOCK		ABD	◆
67	K20.00147	1310 304 175	(1312 304 157)	1	1./ 2.VİT.SENK.HALKA	ENGAGING SLEEVE		ABD	◆
68		1312 206 034		1	1./2.VİTES HİLALİ	GEAR SHIFT FORK 1st/2nd		AB	◆
68		1312 206 040		1	1./2.VİTES HİLALİ	GEAR SHIFT FORK 1st/2nd		C	◆
69	K20.00389	1312 304 084		1	1.VİTES MAS.BİLYA ÇANAĞI	BEARING RACE			◆
70	K20.01328	0750 115 327		1	1.VİTES MASURA BİLYA	NEEDLE CAGE	96X104X72mm		◆
71	K20.00433	1312 304 086		1	1.VİTES DİŞLİSİ 44 DİŞ	GEAR 1st 44 T		ABCD	◆
71	K20.00434	1312 304 085		1	1.VİTES DİŞLİSİ 47 DİŞ	GEAR 1st 47 T		BD	◆
72	K20.00436	1312 304 083		1	GERİ VİTES YILDIZ DİŞLİ	HUB			◆
73	K20.00422	1316 304 133	(1312 304 082)	1	GERİ VİT.MAS.BİL.ÇANAĞI	BEARING RACE			◆
74	K20.01330	0750 115 326		1	GERİ VİTES MASURA BİLYA	NEEDLE CAGE	90X98X50mm		◆
75	K20.00440	1312 304 088		1	GERİ VİTES DİŞLİSİ 39 DİŞ	REVERSE GEAR 39 T		ABCD	◆
75	K20.00439	1312 304 087		1	GERİ VİTES DİŞLİSİ 38 DİŞ	REVERSE GEAR 38 T		BD	◆
76		1312 206 028		1	GERİ VİTES HİLALİ	GEAR SHIFT FORK/RG		AB	◆
76		1312 206 033		1	GERİ VİTES HİLALİ	GEAR SHIFT FORK/RG		C	◆
77	K20.01121	0750 117 678		1	KAMALI MİL ARKA BİLYA	ROLLER BEARING	80X140X36.5mm		◆
78		1312 301 082	(1312 301 053)	1	ŞANZIMAN ORTA GÖVDE	HOUSING			◆
79	K20.01674	0730 106 917		1	GRUP MİLİ ÖN BİLYA RAYNELİ	SHIM	3.00mm		◆
79	K20.01675	0730 106 909		1	GRUP MİLİ ÖN BİLYA RAYNELİ	SHIM	2.60mm		◆

NOTES :

ABCD alfabetic letters are used in conjunction with the encoded parts.

NOTLAR :

ABCD alfabetik harfler ile kodlananparçalar birlikte kullanılır.

Original parts names, oem numbers, symbols and descriptions used in this catalogue are for reference purposes only.

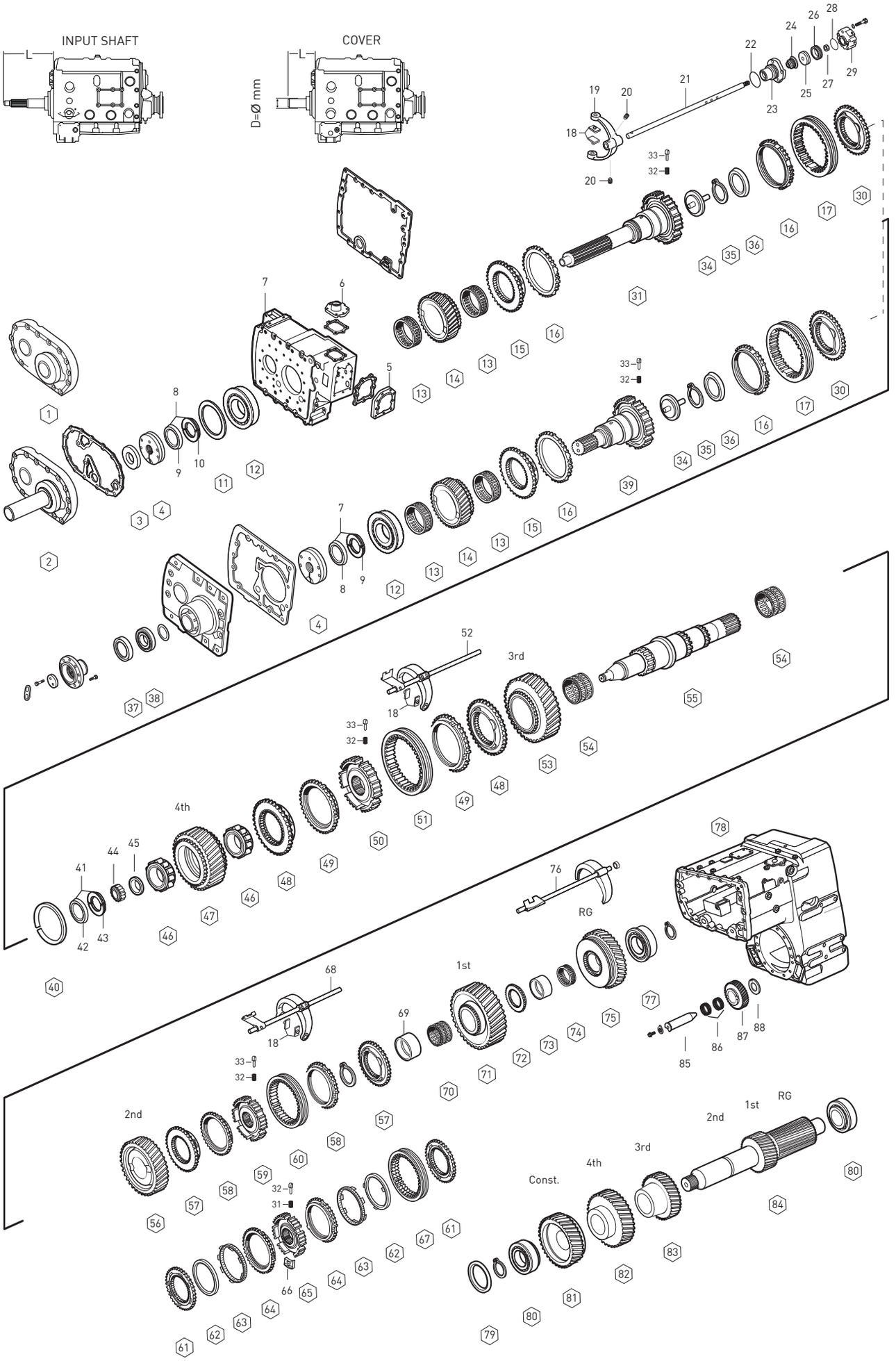

Original parts names, oem numbers, symbols and descriptions used in this catalogue are for reference purposes only.

Fig.	Kacmaz No.	Oem No	Oem Old No	Pcs.	Ürün Tanımı	Description	Sizes	Notes	
79	K20.01676	0730 101 467		1	GRUP MİLİ ÖN BİLYA RAYNELİ	SHIM	2.20mm		◆
79	K20.01677	0730 106 905		1	GRUP MİLİ ÖN BİLYA RAYNELİ	SHIM	1.85mm		◆
79	K20.01678	2001678		1	GRUP MİLİ ÖN BİLYA RAYNELİ	SHIM	0.30mm		◆
79	K20.01679	2001679		1	GRUP MİLİ ÖN BİLYA RAYNELİ	SHIM	0.20mm		◆
79	K20.01680	2001680		1	GRUP MİLİ ÖN BİLYA RAYNELİ	SHIM	0.10mm		◆
80	K20.01126	0750 117 009		2	GRUP MİLİ BİLYASI	ROLLER BEARING	49.2X103.1X43.6mm		◆
81	K20.00124	1312 303 006		1	OVARD.DİŞLİ KARŞ.37 DİŞ	CONSTANT GEAR 37 T		ABCD	◆
81	K20.00125	1312 303 005		1	OVARD.DİŞLİ KARŞ.39 DİŞ	CONSTANT GEAR 39 T		BD	◆
82	K20.00127	1312 303 017		1	4.VİTES DİŞLİ KARŞ.39 DİŞ	GEAR 4th 39 T		ABCD	◆
82	K20.00128	1312 303 016		1	4.VİTES DİŞLİ KARŞ.37 DİŞ	GEAR 4th 37 T		BD	◆
83	K20.00130	1312 303 020		1	3.VİTES DİŞLİ KARŞ.28 DİŞ	GEAR 3rd 28 T		ABCD	◆
83	K20.00131	1312 303 021		1	3.VİTES DİŞLİ KARŞ.26 DİŞ	GEAR 3rd 26 T		BD	◆
84	K20.00442	1312 303 009		1	GRUP MİLİ 19-23 DİŞ	COUNTER SHAFT 19-23 T		ABCD	◆
84	K20.00443	1312 303 008		1	GRUP MİLİ 17-20 DİŞ	COUNTER SHAFT 17-20 T		BD	◆
85	K20.00632	1297 305 008	(1297 305 005)	1	KÜÇÜK GERİ VİTES PİMİ	PIN			◆
86	K20.01336	0750 115 255		2	KÜÇÜK GERİ VİT.MAS.BİLYA	NEEDLE CAGE	45.0X53.0X25.0mm		◆
87	K20.00626	1297 305 012		1	KÜÇÜK GERİ VİTES	REV.IDLER GEAR			◆
87	K20.00627	1297 305 011		1	KÜÇÜK GERİ VİTES	REV.IDLER GEAR			◆
88	K20.01655	0730 150 064		1	KÜÇÜK GERİ VİTES PULU	THRUST WASHER			◆

NOTES :

ABCD alfabetic letters are used in conjunction with the encoded parts.

NOTLAR :

ABCD alfabetik harfler ile kodlananparçalar birlikte kullanılır.

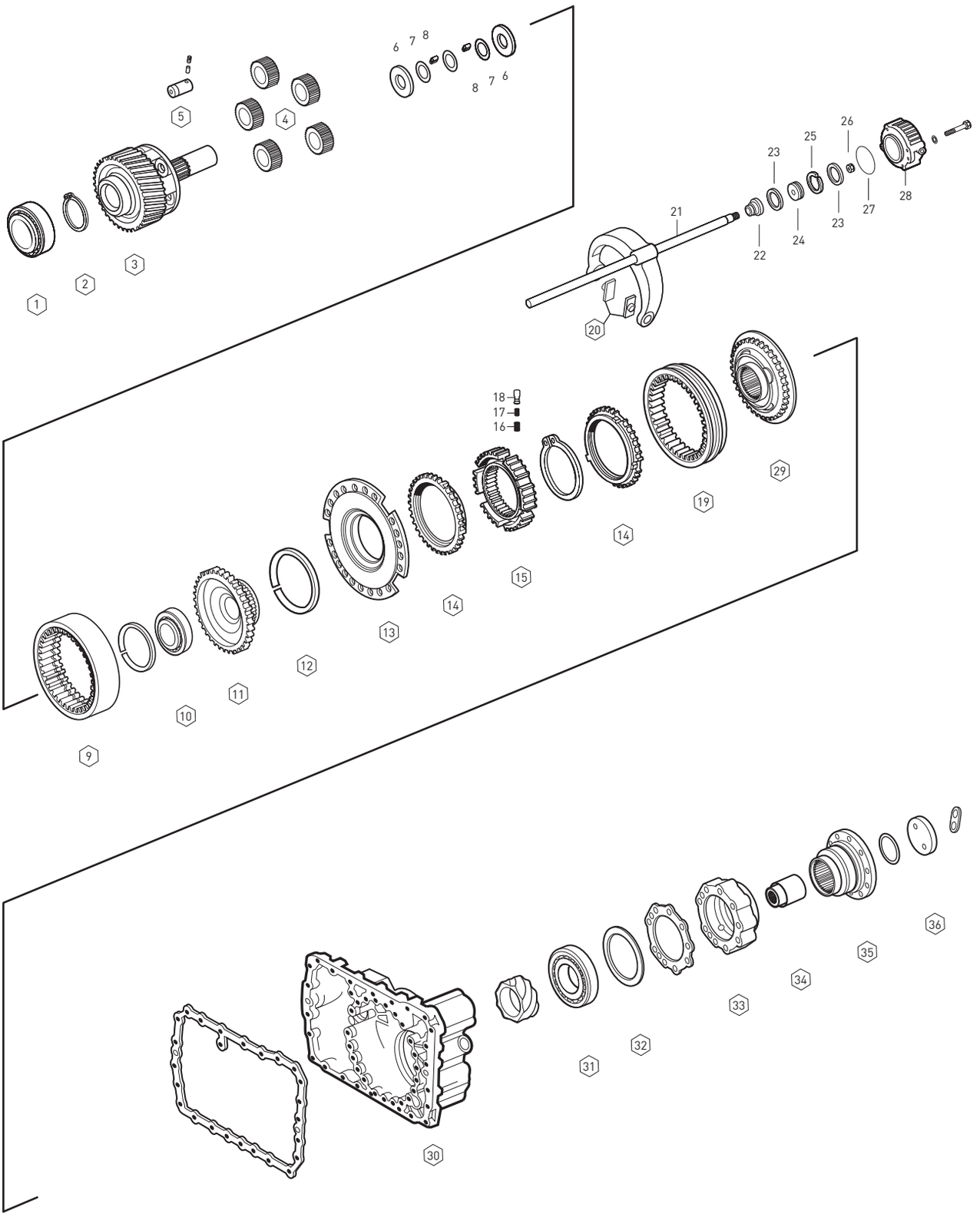

Original parts names, oem numbers, symbols and descriptions used in this catalogue are for reference purposes only.

Fig.	Kacmaz No.	Oem No	Oem Old No	Pcs.	Ürün Tanımı	Description	Sizes	Not	SG 13.80-0.84
1	K20.01137	0735 410 110		1	ŞANZ.HEYKEL BİLYASI	ROLLER BEARING	110X200X38mm		◆
2	K20.01682	0630 501 058		1	ŞANZ.HEYKEL BİLYA SEKMANI	RETAINING RING	471/110X4mm		◆
3	K20.00633	1312 232 025	(1312 232 017)	1	ŞANZIMAN HEYKELİ	PLANETARY CARRIER			◆
4	K20.00119	1312 232 014		5	HEYKEL KOZA DİŞLİ TAKIMI	PLANETARY GEAR SET			◆
5	K20.00444	1312 332 026		5	HEYKEL KOZA DİŞLİ PİMİ	PLANET SHAFT			◆
6	K20.01513	0501 308 981		10	HEYKEL KOZA DİŞLİ PULU	THRUST WASHER			◆
7	K20.01514	0730 107 168		15	HEYKEL KOZA DİŞLİ PULU	THRUST WASHER			◆
8	K20.01454	0750 119 116		140	HEYK.KOZA DİŞLİ TANE BİLYA	NEEDLE ROLLER	10X16.8mm		◆
9	K20.00605	1295 332 086		1	ÇEMBER DİŞLİ 86 DİŞ	RING WHEEL 86 T			◆
10	K20.01135	0635 338 035		1	PLANET ÇAN DİŞLİ BİLYASI	ROLLER BEARING	100X125X13mm		◆
11	K20.00620	1297 332 120		1	PLANET ÇAN DİŞLİ 86 DİŞ	CARRIER HUB 86 T			◆
12	K20.01656	0730 505 056	(0730 505 055)	1	ÇEMBER DİŞLİ SEGMANI	SPRING RING	3.20mm		◆
13	K20.00007	1296 233 006		1	TEPSİ SENKROMENÇ	FLANGE			◆
14	K20.00038	1296 333 045	(1296 333 022)	2	AĞIR SERİ SENK.FRENLEME	SYNCHRONIZING CONE			◆
15	K20.00148	1297 333 115		1	AĞIR SERİ YILDIZ DİŞLİ	GUIDE SLEEVE			◆
16	K20.00469	0732 040 385		9	AĞIR SERİ YILDIZ DİŞLİ YAYI	SPRING			◆
17	K20.00470	0732 040 386		9	AĞIR SERİ YILDIZ DİŞLİ YAYI	SPRING			◆
18	K20.00471	1240 304 278		9	AĞIR SERİ YILDIZ DİŞLİ FİŞEĞİ	PRESSURE PIECE			◆
19	K20.00039	1296 333 023	(0769 186 286)	1	AĞIR SERİ SENK.HALKA	ENGAGING SLEEVE			◆
20	K20.00341	1296 334 004		2	AĞIR SERİ HİLAL PABUCU	SLIDING PAD			◆
21		1297 234 021		1	AĞIR SERİ HİLALİ	GEAR SHIFT FORK			◆
22	K20.01016	0750 112 034		1	AĞIR SERİ HİLAL MİL KEÇESİ	FLANGE PACKING	25.0X38.0X14.2mm		◆
23	K20.01025	0750 112 097		2	AĞIR SERİ HAVA KEÇESİ	SEALING RING			◆
24		1297 334 056		1	AĞIR SERİ HİLAL MİL PİSTONU	PISTON			◆
25	K20.01614	0750 112 096		1	AĞIR SERİ HİLAL MİL FİBERİ	GUIDE RING			◆
26	K20.01774	0737 006 095		1	AĞIR SERİ HİLAL MİL SOMUNU	NUT	M16X1.5mm		◆
27		0634 313 520		1	AĞIR SERİ SİLİNDİR ORİNGİ	O-RING	96.0X3.0mm		◆
28	K20.01868	1297 334 055		1	AĞIR SERİ SİLİNDİR GÖVDESİ	CYLINDER			◆
29	K20.00075	1297 233 056		1	SERİ SENKROMENÇ	ENGAGING RING			◆
30		1313 301 008		1	ŞANZIMAN ARKA GÖVDE	HOUSING			◆
30		1313 301 009		1	ŞANZIMAN ARKA GÖVDE	HOUSING			◆
31	K20.01134	0750 116 394	(0750 116 002)	1	ŞANZIMAN ARKA BİLYA	ROLLER BEARING	90X160X30mm		◆
32	K20.01658	0730 100 115		1	ŞANZ.ARKA BİLYA RAYNELİ	SHIM	0.30mm		◆
32	K20.01659	0730 100 116		1	ŞANZ.ARKA BİLYA RAYNELİ	SHIM	0.20mm		◆
32	K20.01660	2001660		1	ŞANZ.ARKA BİLYA RAYNELİ	SHIM	0.10mm		◆
33		1312 301 037		1	ŞANZ.ARKA BİLYA KAPAĞI	BEARING COVER			◆
34		1312 332 033		1	ŞANZ.ARKA KAPAK BURCU	BUSHING			◆
35	K20.00370	1297 338 041		2	ŞANZIMAN FLANŞI	COMPANION FLANGE	4-H, Ø180mm		◆
35	K20.00371	1297 338 010		2	ŞANZIMAN FLANŞI	COMPANION FLANGE	10-H, Ø180mm		◆
36	K20.01681	1312 332 028		1	ŞANZIMAN FLANŞ PULU	WASHER			◆

NOTES :

NOTLAR :

Original parts names, oem numbers, symbols and descriptions used in this catalogue are for reference purposes only.

SYNCHRONIZER KIT CONST.

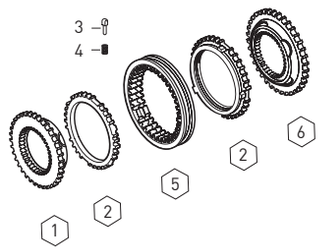

Fig.	Kacmaz No.	Oem No	Oem Old No	Pcs.	Ürün Tanımı	Description
	K20.00522	1297 298 955		Kit	TAKVİYE SENKROMENÇ KİT	SYNCHRONIZER KIT Const
1	K20.00101	1312 304 027		1	TAKVİYE SENKROMENÇ	ENGAGING RING
2	K20.00108	1297 304 484	(1297 304 402)	2	TAKVİYE SENK.FRENLEME	SYNCHRONIZING CONE
3	K20.00111	1297 304 436		3	PRİZ.YILDIZ DİŞLİ FİŞEĞİ	PRESSURE PIECE
4	K20.00110	0732 040 409		3	PRİZ.YILDIZ DİŞLİ YAYI	SPRING
5	K20.00098	1310 304 202	(1312 302 057)	1	TAKVİYE SENK.HALKA	ENGAGING SLEEVE
			(1310 304 174)			
6	K20.00097	1312 304 056		1	TAKVİYE SENKROMENÇ	ENGAGING RING

SYNCHRONIZER KIT 3rd/4th/CONST.

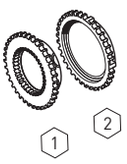

Fig.	Kacmaz No.	Oem No	Oem Old No	Pcs.	Ürün Tanımı	Description
	K20.00523	1312 204 031		Kit	TAK.3./4.VİT.SENK.KİT	SYNCH.KIT 3rd/4th/Const.
1	K20.00101	1312 304 027		1	TAK.3./4.VİT.SENKROMENÇ	ENGAGING RING
2	K20.00108	1297 304 484	(1297 304 402)	1	TAK.3./4.VİT.FRENLEME	SYNCHRONIZING CONE

SYNCHRONIZER KIT 3rd/4th

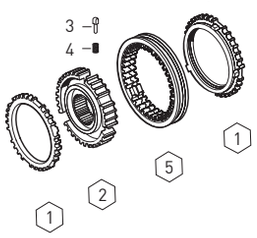

Fig.	Kacmaz No.	Oem No	Oem Old No	Pcs.	Ürün Tanımı	Description
	K20.00794	1316 204 016	(1316 204 014)	Kit	3./4.VİT.FRENLEME KİTİ	SYNCH.KIT 3rd/4th
1	K20.00109	1316 304 168	(1316 304 149)	2	3./4.VİT.SENK.FRENLEME	SYNCHRONIZING CONE
2	K20.00136	1316 304 162		1	3./4.VİT.YILDIZ DİŞLİ	GUIDE SLEEVE
3	K20.00111	1297 304 436		3	PRİZ.YILDIZ DİŞLİ FİŞEĞİ	PRESSURE PIECE
4	K20.00110	0732 040 409		3	PRİZ.YILDIZ DİŞLİ YAYI	SPRING
5	K20.00103	1316 304 167	(1315 304 135)	1	TAKVİYE SENK.HALKA	ENGAGING SLEEVE

SYNCHRONIZER KIT 3rd/4th

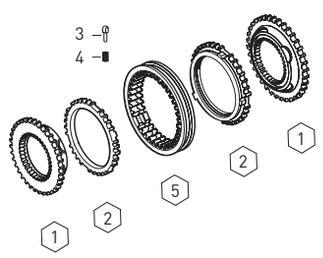

Fig.	Kacmaz No.	Oem No	Oem Old No	Pcs.	Ürün Tanımı	Description
	K20.00524	1315 298 030		Kit	3./4.VİT.SENKROMENÇ KİT	SYNCH.KIT 3rd/4th
1	K20.00101	1312 304 027		2	3./4.VİT.SENKROMENÇ	ENGAGING RING
2	K20.00108	1297 304 484	(1297 304 402)	2	3./4.VİT.SENK.FRENLEME	SYNCHRONIZING CONE
3	K20.00111	1297 304 436		3	PRİZ.YILDIZ DİŞLİ FİŞEĞİ	PRESSURE PIECE
4	K20.00110	0732 040 409		3	PRİZ.YILDIZ DİŞLİ YAYI	SPRING
5	K20.00098	1310 304 202	(1312 302 057)	1	3./4.VİT.SENK.HALKA	ENGAGING SLEEVE
			(1310 304 174)			

SYNCHRONIZER KIT 3rd/4th

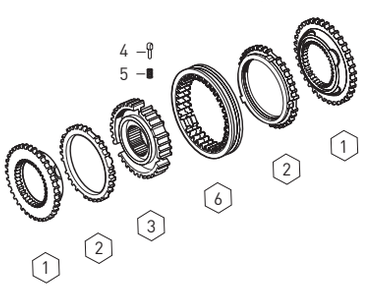

Fig.	Kacmaz No.	Oem No	Oem Old No	Pcs.	Ürün Tanımı	Description
	K20.00088	1315 298 061		Kit	3./4.VİT.SENKROMENÇ KİT	SYNCH.KIT 3rd/4th
1	K20.00102	1316 304 159	(1316 304 145)	2	3./4.VİT.SENKROMENÇ	ENGAGING RING
2	K20.00109	1316 304 168	(1316 304 149)	2	3./4.VİT.SENK.FRENLEME	SYNCHRONIZING CONE
3	K20.00136	1316 304 162		1	3./4.VİT.YILDIZ DİŞLİ	GUIDE SLEEVE
4	K20.00111	1297 304 436		3	PRİZ.YILDIZ DİŞLİ FİŞEĞİ	PRESSURE PIECE
5	K20.00110	0732 040 409		3	PRİZ.YILDIZ DİŞLİ YAYI	SPRING
6	K20.00103	1316 304 167	(1315 304 135)	1	3./4.VİT.SENK.HALKA	ENGAGING SLEEVE

Original parts names, oem numbers, symbols and descriptions used in this catalogue are for reference purposes only.

Fig.	Kacmaz No.	Oem No	Oem Old No	Pcs.	Ürün Tanımı	Description
	K20.00087	1315 298 060	(1316 204 017)	Kit	1./2.VİT.SENKROMENÇ KİT	SYNCH.KIT 1st/2nd
1	K20.00183	1316 304 156		2	1./2.VİT.SENKROMENÇ	ENGAGING RING
2	K20.00113	1316 304 170	(1316 304 150)	2	1./2.VİT.FRENLEME	SYNCH.CONE
3	K20.00180	1316 304 163		1	1./2.VİT.YILDIZ DİŞLİ	GUIDE SLEEVE
4	K20.00111	1297 304 436		3	1./2.VİT.YILDIZ DİŞLİ FİŞEĞİ	PRESSURE PIECE
5	K20.00110	0732 040 409		3	1./2.VİT.YILDIZ DİŞLİ YAYI	SPRING
6	K20.00114	1316 304 169	(1315 304 136)	1	1./2.VİT.SENK.HALKA	ENGAGING SLEEVE

SYNCHRONIZER KIT 3rd/4th

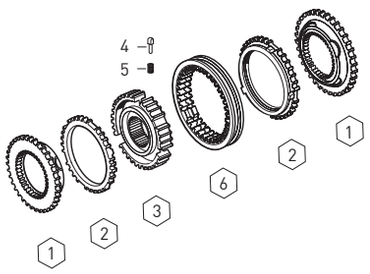

Fig.	Kacmaz No.	Oem No	Oem Old No	Pcs.	Ürün Tanımı	Description
	K20.00482	1315 204 006	(1312 298 911)	Kit	1./2.VİT.SENKROMENÇ KİT	SYNCH.KIT 1st/2nd
1	K20.00143	1312 304 106		2	1./ 2.VİT.SENKROMENÇ	ENGAGING RING
2	K20.00144	1268 304 424		2	1./ 2.VİT.SENK.FRENLEME	SYNCHRONIZING CONE
3	K20.00302	1268 304 494	(1268 304 491)	2	1./ 2.VİT.SENK.FRENLEME	INTERMEDIATE CONE
4	K20.00145	1268 304 525		2	1./ 2.VİT.SENK.FRENLEME	SYNCHRONIZING CONE
5	K20.00146	1312 304 158		1	1./ 2.VİT.YILDIZ DİŞLİ	GUIDE SLEEVE
6	K20.00209	1312 304 159		3	1./ 2.VİT.YIL.DİŞLİ BAKLASI	SLIDING BLOCK
7	K20.00111	1297 304 436		3	PRİZ.veYILDIZ DİŞLİ FİŞEĞİ	PRESSURE PIECE
8	K20.00110	0732 040 409		3	PRİZ.ve YILDIZ DİŞLİ YAYI	SPRING
9	K20.00147	1310 304 175	(1312 304 157)	1	1./ 2.VİT.SENK.HALKA	ENGAGING SLEEVE

SYNCHRONIZER KIT 1st/2nd

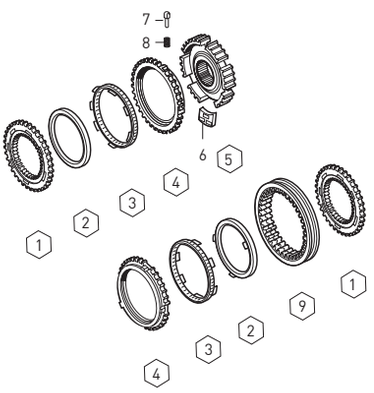

Fig.	Kacmaz No.	Oem No	Oem Old No	Pcs.	Ürün Tanımı	Description
	K20.00538	1316 233 017		Kit	AĞIR SERİ SENK.KİT	SYNCHRONIZER KIT
1	K20.00038	1296 333 045	(1296 333 022)	2	AĞIR SERİ FRENLEME	SYNCHRONIZING CONE
2	K20.00148	1297 333 115		1	AĞIR SERİ YILDIZ DİŞLİ	GUIDE SLEEVE
3	K20.00469	0732 040 385		9	AĞIR SERİ YILDIZ DİŞLİ YAYI	SPRING
4	K20.00470	0732 040 386		9	AĞIR SERİ YILDIZ DİŞLİ YAYI	SPRING
5	K20.00471	1240 304 278		9	AĞIR SERİ YILDIZ DİŞ.FİŞEĞİ	PRESSURE PIECE
6	K20.00039	1296 333 023		1	AĞIR SERİ SENK.HALKA	ENGAGING SLEEVE

SYNCHRONIZER KIT PLANETARY

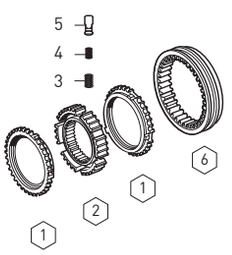

Fig.	Kacmaz No.	Oem No	Oem Old No	Pcs.	Ürün Tanımı	Description
	K20.00519	1295 298 962		Kit	AĞIR SERİ SENK.KİT	SYNCHRONIZER KIT
1	K20.00007	1296 233 006		1	TEPSİ SENKROMENÇ	FLANGE
2	K20.00038	1296 333 045	(1296 333 022)	2	AĞIR SERİ FRENLEME	SYNCHRONIZING CONE
3	K20.00469	0732 040 385		9	AĞIR SERİ YILDIZ DİŞLİ YAYI	SPRING
4	K20.00470	0732 040 386		9	AĞIR SERİ YILDIZ DİŞLİ YAYI	SPRING
5	K20.00471	1240 304 278		9	AĞIR SERİ YILDIZ DİŞ.FİŞEĞİ	PRESSURE PIECE
6	K20.00039	1296 333 023		1	AĞIR SERİ SENK.HALKA	ENGAGING SLEEVE
7	K20.00075	1297 233 056		1	SERİ SENKROMENÇ	ENGAGING RING

SYNCHRONIZER KIT PLANETARY

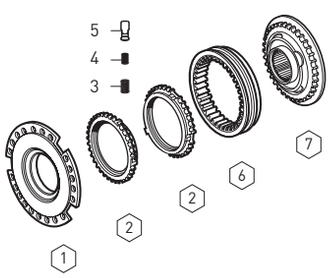

Original parts names, oem numbers, symbols and descriptions used in this catalogue are for reference purposes only.

GEARBOX GASKET KIT

Fig.	Kacmaz No.	Oem No	Oem Old No	Pcs.	Ürün Tanımı	Description
1	K20.01584	1295 298 915		Kit	ŞANZIMAN CONTA TAKIMI	GASKET KIT
2		1313 301 038		1	ŞANZ.ÖN GÖVDE CONTASI	GASKET
3		1313 302 014		1	PRİZ.KEÇE KAPAK CONTASI	GASKET
4		1313 306 012		1	ŞANZ.HİLALİ KAPAK CONTASI	GASKET
5		1313 307 002		1	ŞANZ.ÖN GÖVDE ARKA CONTA	GASKET
5		1313 307 020		2	ŞANZ.KULE KAPAK CONTASI	GASKET
5		1313 307 003		1	ŞANZ.KULE KAPAK CONTASI	GASKET
5		1313 307 004		1	ŞANZ.KULE ALT KAPAK CONTASI	GASKET
5		1313 307 022		1	ŞANZ.KULE ÜST KAPAK CONTASI	GASKET
6		1313 301 037		1	ŞANZ.ARKA GÖVDE CONTASI	GASKET
7		1313 301 036		1	ŞANZ.BİLYA KAPAK CONTASI	GASKET
8	K20.02108	1238 308 201		1	PTO BAĞLANTI KAPAK CONTASI	GASKET
9		1313 307 005		1	ŞANZ.İSTİNAT KAPAK CONTASI	GASKET
10		1313 307 006		1	ŞANZ.İSTİNAT KAPAK CONTASI	GASKET

P.T.O. (POWER TAKE OFF)

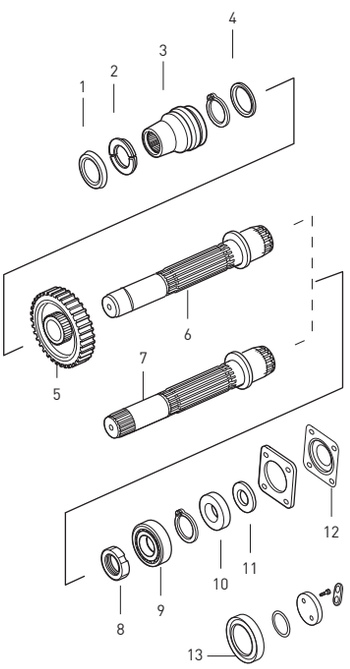

Fig.	Kacmaz No.	Oem No	Oem Old No	Pcs.	Ürün Tanımı	Description
1		1296 313 131		1	P.KİLİT EMNİYET SACI	RETAINING RING
2		0730 104 627		1	PARÇALI KİLİT	SPLIT RING
3		1296 313 238		1	PTO MİL KOVANI	SLIDING SLEEVE
4		0730 104 628		1	PTO DİŞLİ AYAR PULU	THRUST WASHER
5		1296 313 082		1	PTO DİŞLİ	GEAR 33 T
5		1296 313 083		1	PTO DİŞLİ	GEAR 36 T
5		1296 313 084		1	PTO DİŞLİ	GEAR 38 T
5		1296 313 085		1	PTO DİŞLİ	GEAR 39 T
5		1296 313 086		1	PTO DİŞLİ	GEAR 46 T
6	K20.00556	1296 213 028		1	PTO MİLİ DÜZ	INTERM.SHAFT
7	K20.00555	1296 213 028		1	PTO MİLİ FREZELİ	INTERM.SHAFT (Milled)
8		1296 313 125		1	PTO MİL SOMUNU	NUT
9		0735 410 139		1	PTO MİL BİLYASI	ROLLER BEARING
10		7429 032 102		1	PTO BİLYA KAPAK PULU	THRUST WASHER
11		1232 304 062		1	PTO BİLYA KAPAK RAYNELİ	SHIM (1.00mm)
11		1232 304 063		1	PTO BİLYA KAPAK RAYNELİ	SHIM (0.90mm)
11		1232 304 072		1	PTO BİLYA KAPAK RAYNELİ	SHIM (0.70mm)
12		1250 313 190		1	PTO BAĞLANTI KAPAĞI	COVER
13	K20.01013	0750 111 341		1	ŞANZ.ARKA KAPAK KEÇESİ	OIL SEAL

Original parts names, oem numbers, symbols and descriptions used in this catalogue are for reference purposes only.

NOTES / NOTLAR

Original parts names, oem numbers, symbols and descriptions used in this catalogue are for reference purposes only.

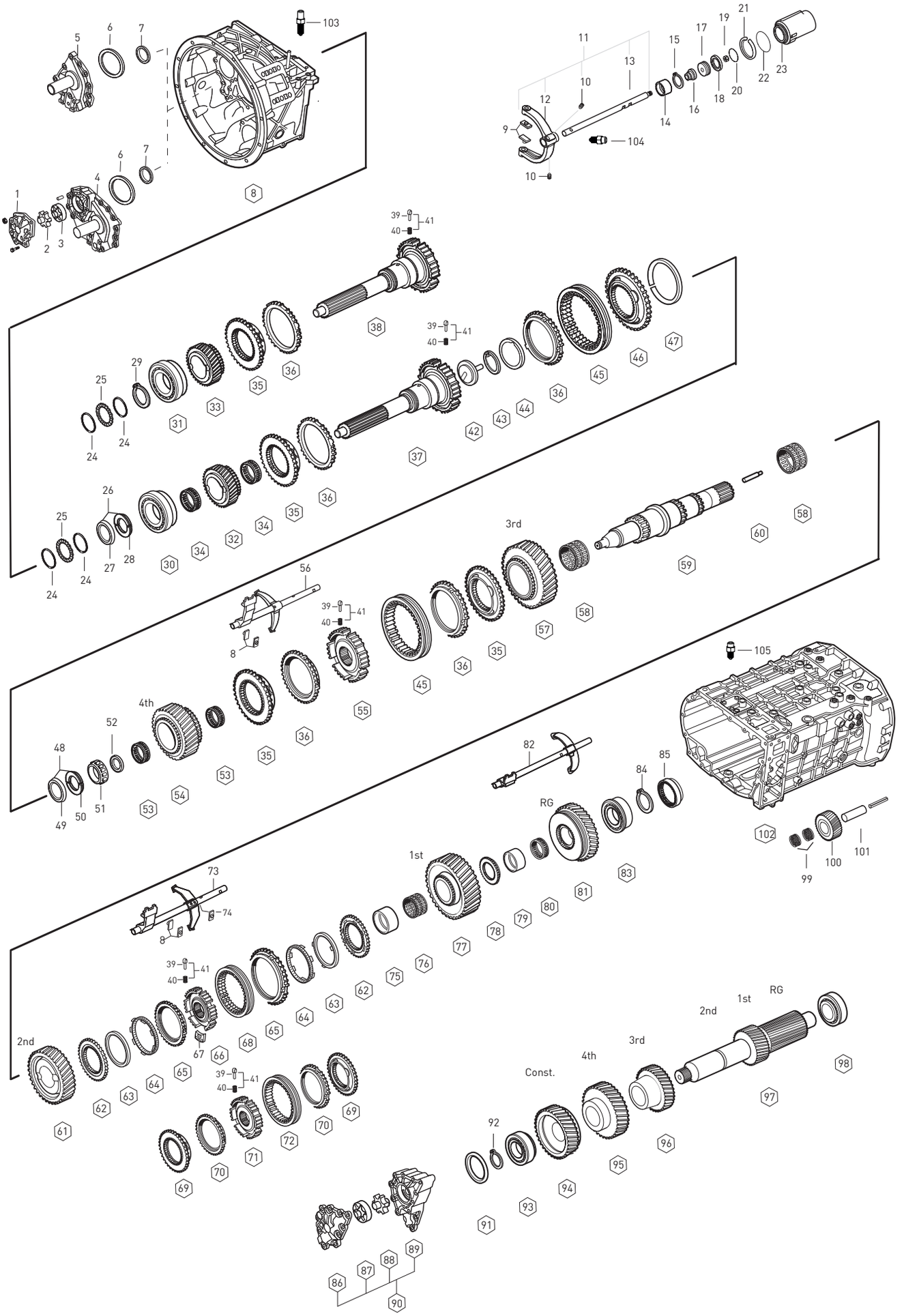

Original parts names, oem numbers, symbols and descriptions used in this catalogue are for reference purposes only.

Fig.	Kacmaz No.	Oem No	Oem Old No	Pcs.	Ürün Tanımı	Description	Sizes	Not	X1:SG 13.85-0.84	X2:DG 16.53-1.00	X3:SG 13.85-0.84	X4:DG 16.53-1.00
1		1315 302 013		1	YAĞ POMPA KAPAĞI	COVER			◆	◆	◆	◆
2	K20.00541	1315 202 014		1	YAĞ POMPA İÇ ROTOR	OIL PUMP GEAR			◆	◆	◆	◆
3	K20.00543	1315 303 027		1	YAĞ POMPA DIŞ ROTOR	ROTOR			◆	◆	◆	◆
4		1315 302 045		1	PRİZDİREK KEÇE KAPAĞI	COVER		(M)	◆	◆	◆	◆
4		1315 302 044		1	PRİZDİREK KEÇE KAPAĞI	COVER		( )	◆	◆	◆	◆
4		1315 302 057		1	PRİZDİREK KEÇE KAPAĞI	COVER		(M)	◆	◆	◆	◆
4		1315 302 113		1	PRİZDİREK KEÇE KAPAĞI	COVER			◆	◆	◆	◆
5	K20.00560	1315 302 136	(1315 402 136)	1	PRİZDİREK KEÇE KAPAĞI	COVER		(M)(R)			◆	◆
5	K20.00559	1315 302 075	(1315 402 075)	1	PRİZDİREK KEÇE KAPAĞI	COVER		(D)			◆	◆
6	K20.01683	0730 007 486		1	PRİZ.ÖN BİLYA RAYNELİ	SHIM	2.00mm		◆	◆	◆	◆
6	K20.01684	0730 007 483		1	PRİZ.ÖN BİLYA RAYNELİ	SHIM	1.85mm		◆	◆	◆	◆
6	K20.01685	0730 007 479		1	PRİZ.ÖN BİLYA RAYNELİ	SHIM	1.65mm		◆	◆	◆	◆
6	K20.01686	0730 007 136		1	PRİZ.ÖN BİLYA RAYNELİ	SHIM	1.60mm		◆	◆	◆	◆
6	K20.01687	0730 007 129		1	PRİZ.ÖN BİLYA RAYNELİ	SHIM	1.25mm		◆	◆	◆	◆
6	K20.01668	0730 005 748		1	PRİZ.ÖN BİLYA RAYNELİ	SHIM	0.90mm		◆	◆	◆	◆
6	K20.01671	2050 309 067		1	PRİZ.ÖN BİLYA RAYNELİ	SHIM	0.30mm		◆	◆	◆	◆
6	K20.01582	0730 005 747		1	PRİZ.ÖN BİLYA RAYNELİ	SHIM	0.25mm		◆	◆	◆	◆
6	K20.01672	2050 309 068		1	PRİZ.ÖN BİLYA RAYNELİ	SHIM	0.20mm		◆	◆	◆	◆
6	K20.01673	2001673		1	PRİZ.ÖN BİLYA RAYNELİ	SHIM	0.10mm		◆	◆	◆	◆
7	K20.01003	0734 310 387	(0734 310 386)	1	PRİZDİREK ÖN KEÇESİ	OIL SEAL	55x75x8mm		◆	◆	◆	◆
8		1315 201 033		1	ŞANZIMAN ÖN GÖVDE	HOUSING			◆	◆		
8		1316 201 142	(1316 301 064)	1	ŞANZIMAN ÖN GÖVDE	HOUSING					◆	◆
8		1316 201 149		1	ŞANZIMAN ÖN GÖVDE	HOUSING					◆	◆
9	K20.00204	1297 306 120		6	TAK-1-2-3-4.VİT.HİL.PABUCU	SLIDING PAD			◆	◆	◆	◆
10	K20.01688	1315 312 047		2	TAK.HİLAL VİDASI	SCREW	M12x1.00mm		◆	◆	◆	◆
11		1315 212 011		1	TAKVİYE HİLALİ KOMPLE	G.S.FORK and RAIL ASSY.			◆	◆	◆	◆
12	K20.00635	1315 312 074		1	TAKVİYE HİLALİ	G.SHIFT FORK			◆	◆	◆	◆
13		1315 312 076		1	TAKVİYE HİLAL MİLİ	G.SHIFT RAIL			◆	◆	◆	◆
14		0730 260 396		1	TAKVİYE HİLALMİL BURCU	BUSHİNG			◆	◆	◆	◆
15		0630 502 021		1	HİLAL MİL BURÇ SEGMANI	RETAINING RING			◆	◆	◆	◆
16	K20.01016	0750 112 034		1	TAKVİYE HİLAL MİL KEÇESİ	FLANGE PACKING	25x38x14.20mm		◆	◆	◆	◆
17	K20.01772	1315 312 020		1	TAK.HİLAL MİL PİSTONU	PISTON			◆	◆	◆	◆
18	K20.01020	0750 112 177		1	TAKVİYE HAVA KEÇESİ	DOUBLE PACKING	55x63x9.40mm		◆	◆	◆	◆
19	K20.01774	0737 006 095		1	TAK.HİLAL MİL SOMUNU	NUT	M16x1.50mm		◆	◆	◆	◆
20		0634 313 320		1	TAKVİYE SİLİNDİR ORİNGİ	O-RING	67x3mm		◆	◆	◆	◆
21	K20.01689	1315 312 034		1	TAKVİYE SİLİNDİR SEGMANI	RETAINING RING			◆	◆	◆	◆
22		0634 313 018		1	TAKVİYE SİLİNDİR ORİNGİ	O-RING	82x3mm		◆	◆	◆	◆
23	K20.00877	1315 312 048		1	TAKVİYE SİLİNDİR GÖVDESİ	CYLINDER			◆	◆	◆	◆
24	K20.01530	0730 150 766		2	PRİZDİREK BİLYA PULU	THRUST WASHER	3.30mm		◆	◆	◆	◆
25		1315 302 040		1	PRİZDİREK YAĞLAMA SACI	SPACER WASHER			◆	◆	◆	◆
26	K20.01591	1499 298 038		1	EMN.SACI VE P.KİLİT TAK.	SPLIT RING KIT	4.20mm		◆	◆		

NOTES :

X1,X2,X3,X4 are used conjunction with the encoded parts
Alphabetical Coding has been done according to Input Shaft

NOTLAR :

X1,X2,X3,X4 ile kodlanan parçalar birlikte kullanılır.
Alfabetik kodlamalar prizdireklere göre yapılmıştır.

Original parts names, oem numbers, symbols and descriptions used in this catalogue are for reference purposes only.

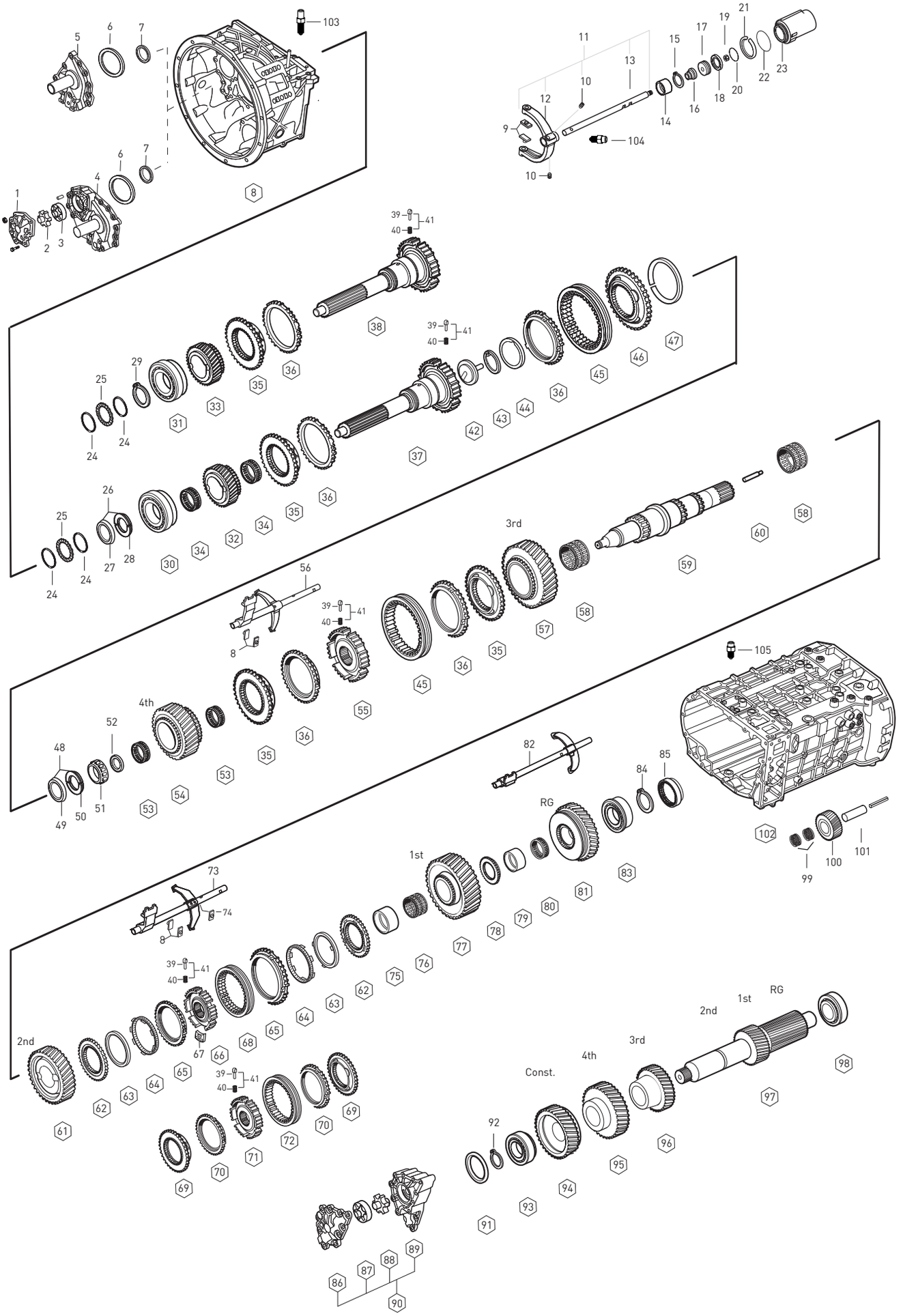

Original parts names, oem numbers, symbols and descriptions used in this catalogue are for reference purposes only.

Fig.	Kacmaz No.	Oem No	Oem Old No	Pcs.	Ürün Tanımı	Description	Sizes	Not	X1):SG 13.85-0.84	X2):DG 16.53-1.00	X3):SG 13.85-0.84	X4):DG 16.53-1.00
26	K20.01589	1499 298 036		1	EMN.SACI VE P.KİLİT TAK.	SPLIT RING KIT	4.10mm		◆	◆		
26	K20.01572	1499 298 034		1	EMN.SACI VE P.KİLİT TAK.	SPLIT RING KIT	4.00mm		◆	◆		
26	K20.01574	1499 298 032		1	EMN.SACI VE P.KİLİT TAK.	SPLIT RING KIT	3.90mm		◆	◆		
26	K20.01576	1499 298 030		1	EMN.SACI VE P.KİLİT TAK.	SPLIT RING KIT	3.80mm		◆	◆		
27	K20.01547	0730 062 579		1	P. KİLİT EMNİYET SACI	RETAINING RING			◆	◆		
28	K20.01590	0730 108 147		2	PARÇALI KİLİT	SPLIT RING	4.20mm		◆	◆		
28	K20.01588	0730 108 145		2	PARÇALI KİLİT	SPLIT RING	4.10mm		◆	◆		
28	K20.01573	0730 108 143		2	PARÇALI KİLİT	SPLIT RING	4.00mm		◆	◆		
28	K20.01575	0730 108 141		2	PARÇALI KİLİT	SPLIT RING	3.90mm		◆	◆		
28	K20.01577	0730 108 139		2	PARÇALI KİLİT	SPLIT RING	3.80mm		◆	◆		
29	K20.01897	0730 501 598		1	P.DİREK B.BİLYA SEGMANI	RETAINING RING					◆	◆
30	K20.01103	0750 117 431		1	PRİZDİREK ÖN BİLYA	ROLLER BEARING	75x150x30.50mm		◆	◆		
31	K20.01104	0750 117 732		1	PRİZDİREK ÖN BİLYA	ROLLER BEARING	80x150x30.50mm				◆	◆
32	K20.00159	1315 302 008		1	TAKVİYE DİŞLİSİ 34 DİŞ	CONTANT GEAR 34 T			◆			
32	K20.00160	1315 302 007		1	TAKVİYE DİŞLİSİ 30 DİŞ	CONTANT GEAR 30 T				◆		
33	K20.00161	1315 302 173		1	TAKVİYE DİŞLİSİ 34 DİŞ	CONTANT GEAR 34 T					◆	◆
34	K20.01331	0735 321 437		2	TAK.DİŞ.MASURA BİLYA	NEEDLE CAGE	93x101x25mm		◆	◆		
35	K20.00101	1312 304 027		3	TAK.-3-4.VİT.SENKROMENÇ	ENGAGING RING			◆	◆	◆	◆
36	K20.00108	1297 304 484		4	TAK.-3-4.VİT.FRENLEME	SYNCHRONIZING CONE			◆	◆	◆	◆
37	K20.00149	1315 202 022	(1315 202 011)	1	PRİZDİREK	INPUT SHAFT	L=109 SAE 2	(M) (D)	◆	◆		
			(1315 302 086)									
37	K20.00150	1315 202 012	(1315 302 042)	1	PRİZDİREK	INPUT SHAFT		(I)	◆	◆		
38	K20.00151	1315 202 037	(1315 302 153)	1	PRİZDİREK	INPUT SHAFT	L=109 SAE 2	(M)(D)(R)			◆	◆
38	K20.00152	1315 202 040	(1315 302 162)	1	PRİZDİREK	INPUT SHAFT	L=117 SAE 2	(I)			◆	◆
38	K20.00640	1315 202 038		1	PRİZDİREK	INPUT SHAFT	L=109 SAE 2	(RVI)			◆	◆
38	K20.00153	1315 202 048		1	PRİZDİREK	INPUT SHAFT		(WSK)			◆	◆
38	K20.00154	1315 221 002		1	PRİZDİREK	INPUT SHAFT	L=109 SAE 2	(NMW)			◆	◆
39	K20.00111	1297 304 436		9	PRİZ.ve YILDIZ DİŞLİ FİŞEĞİ	PRESSURE PIECE			◆	◆	◆	◆
40	K20.00110	0732 040 409		9	PRİZ.ve YIL. DİŞ. FİŞEK YAYI	SPRING			◆	◆	◆	◆
41	K20.01745	1295 298 956		kit	YAY FİŞEK TAKIMI	REPAIR KIT			◆	◆	◆	◆
42	K20.01504	1315 302 196		1	PRİZDİREK YAĞ PİPETİ	OIL PIPET			◆	◆	◆	◆
43	K20.01505	0630 502 027		1	PRİZDİREK YAĞ PİPETİ SEG.	RETAINING RING	50x2mm		◆	◆	◆	◆
44	K20.01011	0501 314 060	(0750 101 179)	1	PRİZDİREK ARKA KEÇE	OIL SEAL			◆	◆	◆	◆
45	K20.00098	1310 304 202	(1310 304 174)	2	TAK.-3.-4.VİTES SENK.HALKA	ENGAGING SLEEVE			◆	◆	◆	◆
			(1312 302 057)									
46	K20.00097	1312 304 056		1	TAKVİYE SENKROMENÇ	ENGAGING RING			◆	◆	◆	◆
47	K20.01532	0730 005 465		1	SENK.AYAR SEGMANI	RING	3.40mm		◆	◆	◆	◆
47	K20.01531	0730 006 171		1	SENK.AYAR SEGMANI	RING	3.50mm		◆	◆	◆	◆
47	K20.01524	0730 005 466		1	SENK.AYAR SEGMANI	RING	3.60mm		◆	◆	◆	◆
47	K20.91524	0730 005 466		1	SENK.AYAR SEGMANI	RING	3.70mm		◆	◆	◆	◆
47	K20.81524	0730 005 466		1	SENK.AYAR SEGMANI	RING	3.80mm		◆	◆	◆	◆

NOTES :

X1,X2,X3,X4 are used conjunction with the encoded parts
Alphabetical Coding has been done according to Input Shaft

NOTLAR :

X1,X2,X3,X4 ile kodlanan parçalar birlikte kullanılır.
Alfabetik kodlamalar prizdireklere göre yapılmıştır.

Original parts names, oem numbers, symbols and descriptions used in this catalogue are for reference purposes only.

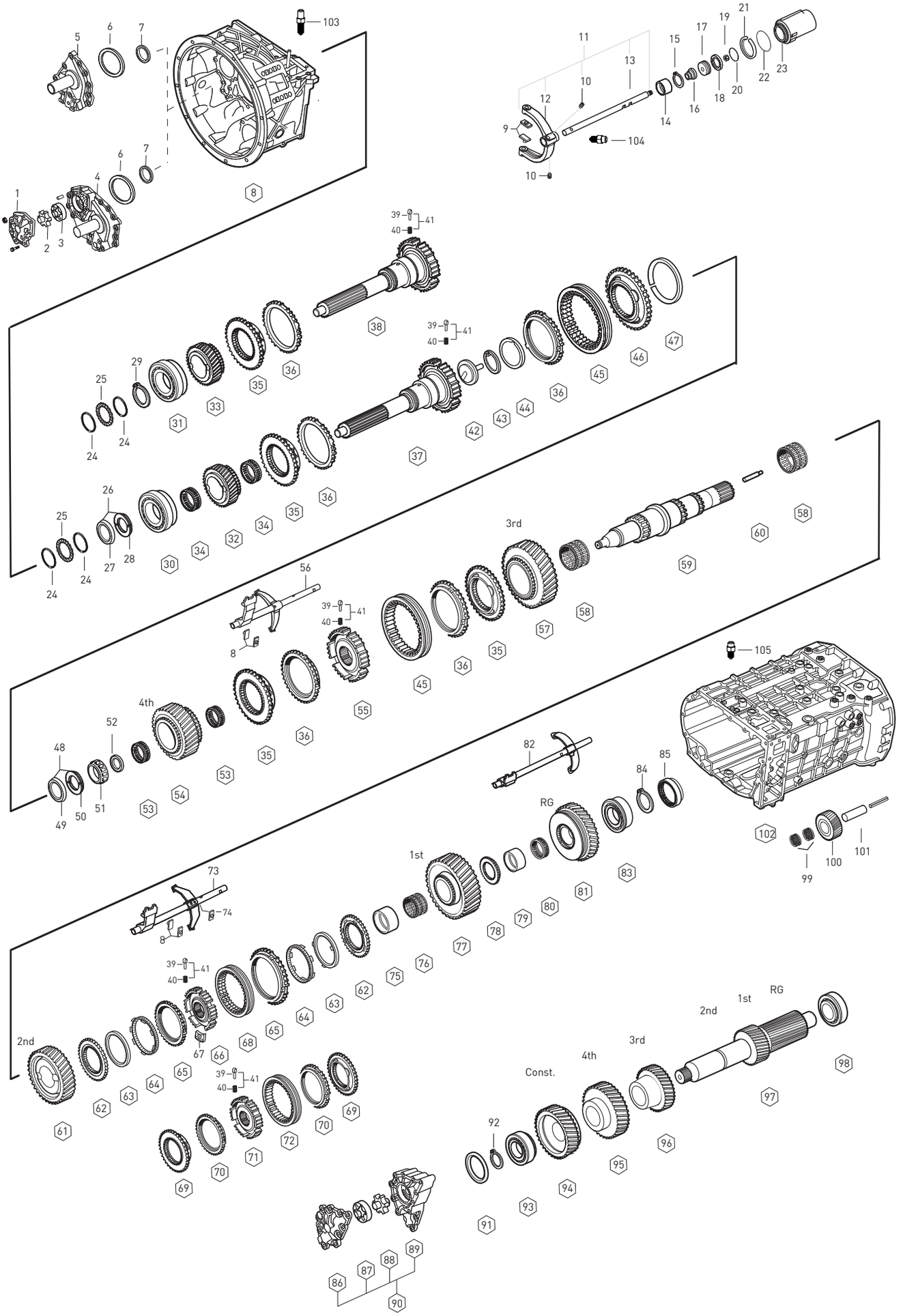

Original parts names, oem numbers, symbols and descriptions used in this catalogue are for reference purposes only.

Fig.	Kacmaz No.	Oem No	Oem Old No	Pcs.	Ürün Tanımı	Description	Sizes	Not	X1) SG 13.85-0.84	X2) DG 16.53-1.00	X3) SG 13.85-0.84	X4) DG 16.53-1.00
47	K20.71524	0730 005 466		1	SENK.AYAR SEGMANI	RING	3.90mm		◆	◆	◆	◆
47	K20.01523	0730 005 468		1	SENK.AYAR SEGMANI	RING	4.00mm		◆	◆	◆	◆
47	K20.91523	0730 005 468		1	SENK.AYAR SEGMANI	RING	4.50mm		◆	◆	◆	◆
48	K20.01561	1499 298 027		1	EMN.SACI VE P.KİLİT TAK.	SPLIT RING KIT	5.00mm		◆	◆	◆	◆
48	K20.01563	1499 298 026		1	EMN.SACI VE P.KİLİT TAK.	SPLIT RING KIT	4.90mm		◆	◆	◆	◆
48	K20.01580	2001580		1	EMN.SACI VE P.KİLİT TAK.	SPLIT RING KIT	4.85mm		◆	◆	◆	◆
48	K20.01565	1499 298 025		1	EMN.SACI VE P.KİLİT TAK.	SPLIT RING KIT	4.80mm		◆	◆	◆	◆
48	K20.01567	1499 298 024		1	EMN.SACI VE P.KİLİT TAK.	SPLIT RING KIT	4.70mm		◆	◆	◆	◆
48	K20.01569	1499 298 023		1	EMN.SACI VE P.KİLİT TAK.	SPLIT RING KIT	4.60mm		◆	◆	◆	◆
49	K20.01571	0730 062 781		1	KAMALI MİL EMNİYET SACI	RETAINING RING			◆	◆	◆	◆
50	K20.01562	0730 107 023		2	PARÇALI KİLİT	SPLIT RING	5.00mm		◆	◆	◆	◆
50	K20.01564	0730 107 022		2	PARÇALI KİLİT	SPLIT RING	4.90mm		◆	◆	◆	◆
50	K20.01581	2001581		2	PARÇALI KİLİT	SPLIT RING	4.85mm		◆	◆	◆	◆
50	K20.01566	0730 107 021		2	PARÇALI KİLİT	SPLIT RING	4.80mm		◆	◆	◆	◆
50	K20.01568	0730 107 020		2	PARÇALI KİLİT	SPLIT RING	4.70mm		◆	◆	◆	◆
50	K20.01570	0730 107 019		2	PARÇALI KİLİT	SPLIT RING	4.60mm		◆	◆	◆	◆
51	K20.01109	0750 117 232	(0735 371 563)	1	KAMALI MİL UÇ BİLYA	ROLLER BEARING	42x40.3mm		◆	◆	◆	◆
52	K20.01527	1315 304 048		1	KAMALI MİL UÇ BİLYA PULU	THRUST WASHER	8.00mm		◆	◆	◆	◆
52	K20.01528	1315 304 047		1	KAMALI MİL UÇ BİLYA PULU	THRUST WASHER	7.90mm		◆	◆	◆	◆
52	K20.01529	1315 304 046		1	KAMALI MİL UÇ BİLYA PULU	THRUST WASHER	7.80mm		◆	◆	◆	◆
52	K20.01762	1315 304 045		1	KAMALI MİL UÇ BİLYA PULU	THRUST WASHER	7.70mm		◆	◆	◆	◆
52	K20.01763	1315 304 044		1	KAMALI MİL UÇ BİLYA PULU	THRUST WASHER	7.60mm		◆	◆	◆	◆
52	K20.01764	1315 304 043		1	KAMALI MİL UÇ BİLYA PULU	THRUST WASHER	7.50mm		◆	◆	◆	◆
52	K20.01765	1315 304 085		1	KAMALI MİL UÇ BİLYA PULU	THRUST WASHER	7.40mm		◆	◆	◆	◆
52	K20.01766	1315 304 086		1	KAMALI MİL UÇ BİLYA PULU	THRUST WASHER	7.30mm		◆	◆	◆	◆
53	K20.01302	0750 118 198		2	4.VİTES DİŞLİ MAS.BİLYA	NEEDLE CAGE	67X101X32mm		◆	◆	◆	◆
54	K20.00172	1315 304 017		1	4.VİTES DİŞLİSİ 30 DİŞ	GEAR 4th 30 T			◆			◆
54	K20.00173	1315 304 089		1	4.VİTES DİŞLİSİ 32 DİŞ	GEAR 4th 32 T				◆	◆	
55	K20.00181	1312 304 052		1	3./ 4.VİT.YILDIZ DİŞLİ	GUIDE SLEEVE			◆	◆	◆	◆
56		1315 206 065		1	3./ 4.VİTES HİLALİ	GEAR SHIFT FORK 3rd/4th			◆	◆	◆	◆
57	K20.00175	1315 304 028		1	3.VİTES DİŞLİSİ 32 DİŞ	GEAR 3rd 32 T			◆			◆
57	K20.00176	1315 304 027		1	3.VİTES DİŞLİSİ 34 DİŞ	GEAR 3rd 34 T				◆	◆	
58	K20.01322	0735 321 087	(0750 115 584)	2	2./3.VİTES MASURA BİLYA	NEEDLE CAGE	92x100x53mm		◆	◆	◆	◆
59	K20.00390	1315 304 029		1	KAMALI MİL	MAIN SHAFT			◆	◆	◆	◆
59	K20.00373	1315 304 130	(1313 304 072)	1	KAMALI MİL	MAIN SHAFT			◆	◆	◆	◆
60	K20.01506	1324 304 014	(1312 304 150)	1	KAMALI MİL YAĞ BORUSU	OIL PIPE			◆	◆	◆	◆
61	K20.00177	1315 304 026		1	2.VİTES DİŞLİSİ 37 DİŞ	GEAR 2nd 37 T			◆			◆
61	K20.00178	1315 304 025		1	2.VİTES DİŞLİSİ 38 DİŞ	GEAR 2nd 38 T				◆	◆	
62	K20.00143	1312 304 106		2	1./ 2.VİT.SENKROMENÇ	ENGAGING RING			◆	◆	◆	◆
63	K20.00144	1268 304 424		2	1./ 2.VİT.SENK.FRENLEME	SYNCHRONIZING CONE			◆	◆	◆	◆
64	K20.00302	1268 304 494	(1268 304 491)	2	1./ 2.VİT.SENK.FRENLEME	INTERMEDIATE CONE			◆	◆	◆	◆

NOTES :

X1,X2,X3,X4 are used conjunction with the encoded parts
Alphabetical Coding has been done according to Input Shaft

NOTLAR :

X1,X2,X3,X4 ile kodlanan parçalar birlikte kullanılır.
Alfabetik kodlamalar prizdireklere göre yapılmıştır.

Original parts names, oem numbers, symbols and descriptions used in this catalogue are for reference purposes only.

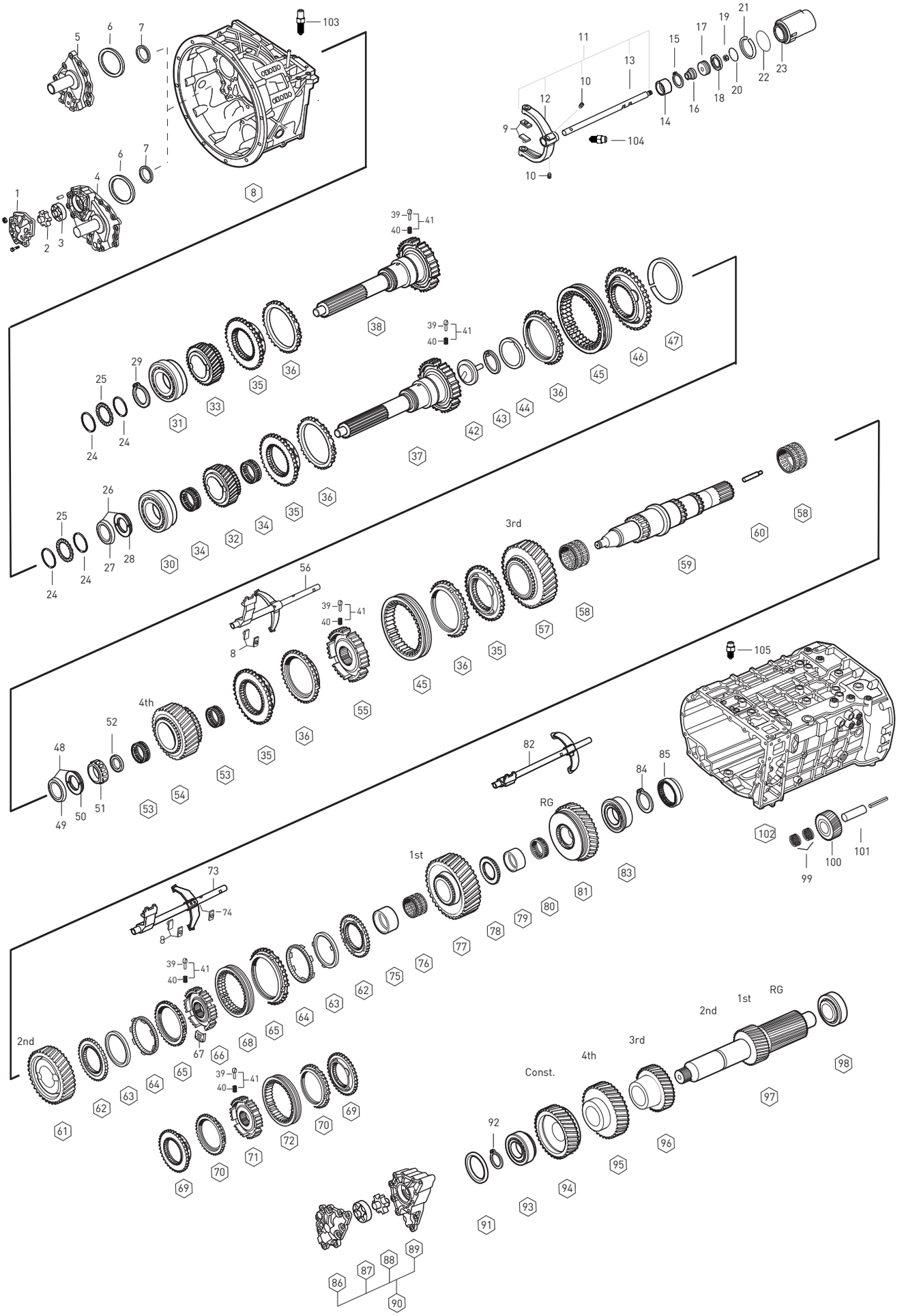

Original parts names, oem numbers, symbols and descriptions used in this catalogue are for reference purposes only.

Fig.	Kacmaz No.	Oem No	Oem Old No	Pcs.	Ürün Tanımı	Description	Sizes	Not	X1) :SG 13.85-0.84	X2) :DG 16.53-1.00	X3) :SG 13.85-0.84	X4) :DG 16.53-1.00
65	K20.00145	1268 304 525		2	1./ 2.VİT.SENK.FRENLEME	SYNCHRONIZING CONE						
66	K20.00146	1312 304 158		1	1./ 2.VİT.YILDIZ DİŞLİ	GUIDE SLEEVE						
67	K20.00209	1312 304 159		3	1./ 2.VİT.YILDIZ DİŞ.BAKLASI	SLIDING BLOCK						
68	K20.00147	1310 304 175	(1312 304 157)	1	1./ 2.VİT.SENK.HALKA	ENGAGING SLEEVE						
69	K20.00182	1313 304 009		2	1./ 2.VİT.SENKROMENÇ	ENGAGING RING						
70	K20.00112	1297 304 485	(1297 304 401)	2	1./ 2.VİT.SENK.FRENLEME	SYNCHRONIZING CONE						
71	K20.00179	1313 304 008		1	1./ 2.VİTES YILDIZ DİŞLİ	GUIDE SLEEVE			◆	◆	◆	◆
72	K20.00115	1316 304 078		1	1./ 2.VİTES SENK.HALKA	ENGAGING SLEEVE			◆	◆	◆	◆
73		1315 206 062		1	1./2.VİTES HİLALİ	GEAR SHIFT FORK 1st/2nd			◆	◆	◆	◆
74	K20.00812	1315 306 079		1	1./2.VİT.HİL.ORTALAMA PABUCU	SLIDING PAD			◆	◆	◆	◆
75	K20.00374	1313 304 038		1	1.VİTES MAS.BİLYA ÇANAĞI	BEARING RACE			◆	◆	◆	◆
76	K20.01323	0750 115 325		1	1.VİTES MASURA BİLYA	NEEDLE CAGE	96x104x55mm		◆	◆	◆	◆
77	K20.00392	1315 304 014		1	1.VİTES DİŞLİSİ 44 DİŞ	GEAR 1st 44 T			◆			◆
77	K20.00391	1315 304 004		1	1.VİTES DİŞLİSİ 47 DİŞ	GEAR 1st 47 T				◆	◆	
78	K20.00393	1315 304 018		1	GERİ VİTES YILDIZ DİŞLİ	HUB			◆	◆	◆	◆
79	K20.00378	1315 304 132		1	GERİ VİT.MAS.BİL.ÇANAĞI	BEARING RACE			◆	◆	◆	◆
80	K20.01324	0750 115 324		1	GERİ VİTES MASURA BİLYA	NEEDLE CAGE	90x98x41mm		◆	◆	◆	◆
81	K20.00394	1315 304 013		1	GERİ VİTES DİŞLİSİ 42 DİŞ	REVERSE GEAR 42 T			◆			◆
81	K20.00395	1315 304 006	(1315 304 380)	1	GERİ VİTES DİŞLİSİ 44 DİŞ	REVERSE GEAR 44 T				◆	◆	
82		1315 206 070		1	GERİ VİTES HİLALİ	GEAR SHIFT FORK/RG			◆	◆	◆	◆
83	K20.01119	0750 117 677		1	KAMALI MİL ARKA BİLYA	ROLLER BEARING	80x130x36mm		◆	◆	◆	◆
84	K20.02151	0630 501 339		1	K.MİL ARKA BİLYA SEGMANI	RETAINING RING	80x3.65mm		◆	◆	◆	◆
84		0630 501 338		1	K.MİL ARKA BİLYA SEGMANI	RETAINING RING	80x3.60mm		◆	◆	◆	◆
84	K20.02146	0630 501 316		1	K.MİL ARKA BİLYA SEGMANI	RETAINING RING	80x3.50mm		◆	◆	◆	◆
84	K20.02147	0630 501 315		1	K.MİL ARKA BİLYA SEGMANI	RETAINING RING	80x3.40mm		◆	◆	◆	◆
84	K20.02141	0630 501 314		1	K.MİL ARKA BİLYA SEGMANI	RETAINING RING	80x3.30mm		◆	◆	◆	◆
84	K20.02148	0630 501 313		1	K.MİL ARKA BİLYA SEGMANI	RETAINING RING	80x3.20mm		◆	◆	◆	◆
85	K20.01592	1315 332 054		1	KAMALI MİL ARKA PUL	WASHER			◆	◆	◆	◆
86	K20.00568	1315 302 120	(1315 402 120)	1	ŞANZ.YAĞ POMPA KAPAĞI	PUMP COVER					◆	◆
87	K20.00542	1314 202 039		1	YAĞ POMPA İÇ ROTOR	OIL PUMP GEAR					◆	◆
88	K20.00543	1315 303 027		1	YAĞ POMPA DIŞ ROTOR	ROTOR					◆	◆
89	K20.00569	1315 302 121	(1315 402 121)	1	ŞANZ.YAĞ POMPA GÖVDESİ	PUMP HOUSING					◆	◆
90	K20.00570	2000570		kit	ŞANZ.YAĞ POMPASI KOMPLE	OIL PUMP ASSY.					◆	◆
91	K20.01648	0730 102 099		1	GRUP MİLİ ÖN BİLYA RAYNELİ	SHIM	3.00mm		◆	◆		
91	K20.01649	0730 102 060		1	GRUP MİLİ ÖN BİLYA RAYNELİ	SHIM	2.60mm		◆	◆		
91	K20.01650	0730 102 068		1	GRUP MİLİ ÖN BİLYA RAYNELİ	SHIM	2.20mm		◆	◆		
91	K20.01651	0730 102 075		1	GRUP MİLİ ÖN BİLYA RAYNELİ	SHIM	1.85mm		◆	◆		
91	K20.01652	2001652		1	GRUP MİLİ ÖN BİLYA RAYNELİ	SHIM	0.30mm		◆	◆		
91	K20.01653	2001653		1	GRUP MİLİ ÖN BİLYA RAYNELİ	SHIM	0.20mm		◆	◆		
91	K20.01654	2001654		1	GRUP MİLİ ÖN BİLYA RAYNELİ	SHIM	0.10mm		◆	◆		
91	K20.01674	0730 106 917		1	GRUP MİLİ ÖN BİLYA RAYNELİ	SHIM	3.00mm				◆	◆

NOTES :

X1,X2,X3,X4 are used conjunction with the encoded parts
Alphabetical Coding has been done according to Input Shaft

NOTLAR :

X1,X2,X3,X4 ile kodlanan parçalar birlikte kullanılır.
Alfabetik kodlamalar prizdireklere göre yapılmıştır.

Original parts names, oem numbers, symbols and descriptions used in this catalogue are for reference purposes only.

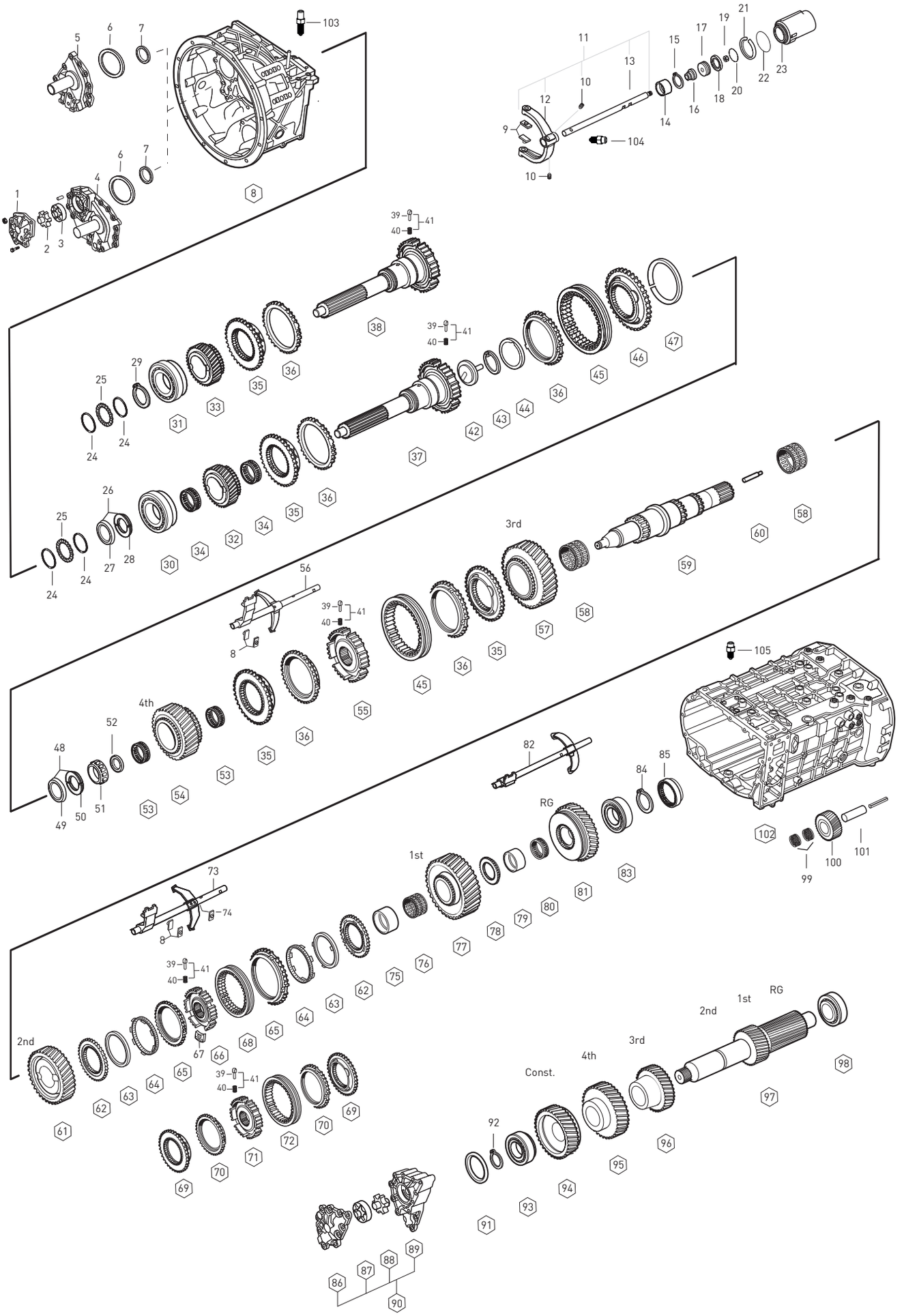

Original parts names, oem numbers, symbols and descriptions used in this catalogue are for reference purposes only.

Fig.	Kacmaz No.	Oem No	Oem Old No	Pcs.	Ürün Tanımı	Description	Sizes	Not	X1) :SG 13.85-0.84	X2) :DG 16.53-1.00	X3) :SG 13.85-0.84	X4) :DG 16.53-1.00
91		0730 106 916		1	GRUP MİLİ ÖN BİLYA RAYNELİ	SHIM	2.95mm				◆	◆
91	K20.01751	0730 106 915		1	GRUP MİLİ ÖN BİLYA RAYNELİ	SHIM	2.90mm				◆	◆
91	K20.01750	0730 106 913		1	GRUP MİLİ ÖN BİLYA RAYNELİ	SHIM	2.80mm				◆	◆
91	K20.01749	0730 106 911		1	GRUP MİLİ ÖN BİLYA RAYNELİ	SHIM	2.70mm				◆	◆
91	K20.01675	0730 106 909		1	GRUP MİLİ ÖN BİLYA RAYNELİ	SHIM	2.60mm				◆	◆
91	K20.01748	0730 100 799		1	GRUP MİLİ ÖN BİLYA RAYNELİ	SHIM	2.50mm				◆	◆
91	K20.01747	0730 100 801		1	GRUP MİLİ ÖN BİLYA RAYNELİ	SHIM	2.40mm				◆	◆
91	K20.01746	0730 100 803		1	GRUP MİLİ ÖN BİLYA RAYNELİ	SHIM	2.30mm				◆	◆
91	K20.01676	0730 101 467		1	GRUP MİLİ ÖN BİLYA RAYNELİ	SHIM	2.20mm				◆	◆
91		0730 101 469		1	GRUP MİLİ ÖN BİLYA RAYNELİ	SHIM	2.10mm				◆	◆
91	K20.01739	0730 106 906		1	GRUP MİLİ ÖN BİLYA RAYNELİ	SHIM	1.90mm				◆	◆
91	K20.01737	2001737		1	GRUP MİLİ ÖN BİLYA RAYNELİ	SHIM	0.25mm				◆	◆
91	K20.01736	2001736		1	GRUP MİLİ ÖN BİLYA RAYNELİ	SHIM	0.20mm				◆	◆
91	K20.01735	2001735		1	GRUP MİLİ ÖN BİLYA RAYNELİ	SHIM	0.10mm				◆	◆
92		0631 531 065		1	GRUP MİLİ ÖN BİLYA SEGMANI	RETAINING RING	50x3mm		◆	◆	◆	◆
93	K20.01124	0750 117 010	(0750 117 030)	1	GRUP MİLİ ÖN BİLYA	ROLLER BEARING	50.8X100X35mm		◆	◆		
			(0735 370 055)									
93	K20.01126	0750 117 009	(0735 372 156)	1	GRUP MİLİ ÖN BİLYA	ROLLER BEARING	49.20X103.1X43.60mm				◆	◆
94	K20.00164	1315 303 052	(1315 303 012)	1	TAKVİYE DİŞLİ KARŞ.37 DİŞ	CONS.GEAR 37 T			◆		◆	◆
94	K20.00166	1315 303 008		1	TAKVİYE DİŞLİ KARŞ.39 DİŞ	CONS.GEAR 39 T				◆		
95	K20.00167	1315 303 046	(1315 303 011)	1	4.VİTES DİŞLİ KARŞ.39 DİŞ	GEAR 4th 39 T			◆			◆
95	K20.00168	1315 303 050		1	4.VİTES DİŞLİ KARŞ.35 DİŞ	GEAR 4th 35 T				◆	◆	
96	K20.00170	1315 303 010		1	3.VİTES DİŞLİ KARŞ.28 DİŞ	GEAR 3rd 28 T			◆			◆
96	K20.00171	1315 303 004		1	3.VİTES DİŞLİ KARŞ.26 DİŞ	GEAR 3rd 26 T				◆	◆	
97	K20.00398	1315 303 022	(1315 303 048)	1	GRUP MİLİ 19-23 DİŞ	COUNTER SHAFT 19-23 T			◆			
97	K20.00396	1315 303 020	(1315 303 049)	1	GRUP MİLİ 17-20 DİŞ	COUNTER SHAFT 17-20 T				◆		
97	K20.00397	1315 303 041		1	GRUP MİLİ 19-23 DİŞ	COUNTER SHAFT 19-23 T						◆
97	K20.00567	1315 303 042		1	GRUP MİLİ 17-20 DİŞ	COUNTER SHAFT 17-20 T					◆	
98	K20.01127	0750 117 011		1	GRUP MİLİ ARKA BİLYA	ROLLER BEARING			◆	◆	◆	◆
99	K20.01337	0750 115 366		2	KÜÇÜK GERİ VİT.MAS.BİLYA	NEEDLE CAGE	45x57x21mm		◆	◆	◆	◆
100	K20.00970	1315 305 002	(1315 305 011)	1	K.GERİ VİTES DİŞLİSİ 22 DİŞ	REV.IDLER GEAR 22 T			◆			◆
100	K20.00642	1315 305 005		1	K.GERİ VİTES DİŞLİSİ 20 DİŞ	REV.IDLER GEAR 20 T				◆	◆	
101	K20.00644	1315 201 054		1	KÜÇÜK GERİ VİTES PİMİ	PIN			◆			◆
101	K20.00643	1315 201 053		1	KÜÇÜK GERİ VİTES PİMİ	PIN				◆	◆	
102		1315 201 074	(1315 201 186)	1	ŞANZIMAN ORTA GÖVDE	HOUSING			◆	◆	◆	◆
102		1315 201 076		1	ŞANZIMAN ORTA GÖVDE	HOUSING			◆	◆	◆	◆
103	K20.00813	1324 207 004	(1315 207 014)	1	İSTİNATLAMA FİŞEĞİ	DETENT PLUNGER	168 N		◆	◆	◆	◆
104	K20.00819	1324 207 033	(1313 207 003)	1	İSTİNATLAMA FİŞEĞİ	DETENT PLUNGER	235 N		◆	◆	◆	◆
105	K20.00838	1324 207 035	(1313 207 005)	1	İSTİNATLAMA FİŞEĞİ	DETENT PLUNGER	145 N		◆	◆	◆	◆
			(1313 207 001)									

NOTES :

X1,X2,X3,X4 are used conjunction with the encoded parts
Alphabetical Coding has been done according to Input Shaft

NOTLAR :

X1,X2,X3,X4 ile kodlanan parçalar birlikte kullanılır.
Alfabetik kodlamalar prizdireklere göre yapılmıştır.

Original parts names, oem numbers, symbols and descriptions used in this catalogue are for reference purposes only.

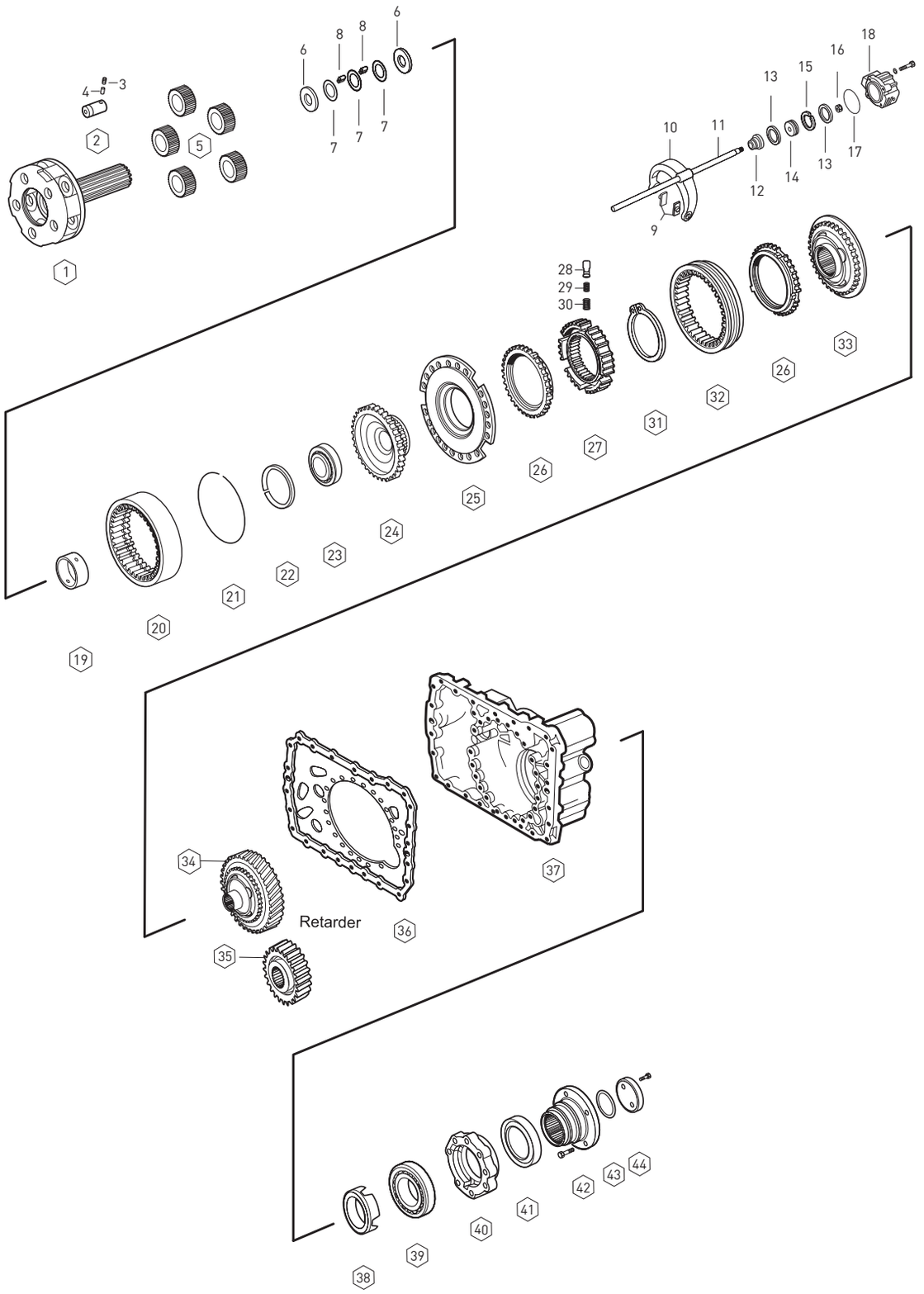

Original parts names, oem numbers, symbols and descriptions used in this catalogue are for reference purposes only.

Fig.	Kacmaz No.	Oem No	Oem Old No	Pcs.	Ürün Tanımı	Description	Sizes	(X1):SG 13.85-0.84	(X2):DG 16.53-1.00		
1	K20.00623	1315 232 023		1	ŞANZIMAN HEYKELİ	PLANETARY CARRIER		◆	◆		
2	K20.00384	1296 332 005		5	HEYKEL KOZA DİŞLİ PİMİ	PLANET SHAFT		◆	◆		
3		0631 329 167		5	HEYK. KOZA DİŞ. PİM KİLİT PİMİ	LOCK PIN	3.0x26mm	◆	◆		
4		0631 329 051		5	HEYK. KOZA DİŞ. PİM KİLİT PİMİ	LOCK PIN	5.0x26mm	◆	◆		
5	K20.00155	1315 232 001		1	HEYK. KOZA DİŞ. TAKIMI	PLANETARY GEAR SET		◆			
5	K20.00086	1313 232 003		1	HEYK. KOZA DİŞ. TAKIMI	PLANETARY GEAR SET			◆		
6	K20.01513	0501 308 981		10	HEYKEL KOZA DİŞLİ PULU	THRUST WASHER	1.25mm	◆	◆		
7	K20.01514	0730 107 168		15	HEYKEL KOZA DİŞLİ PULU	THRUST WASHER	1.00mm	◆	◆		
8	K20.01455	0735 470 164		140	HEYK.KOZA DİŞ.TANE BİLYA	NEEDLE ROLLER	10X15mm	◆	◆		
9	K20.00341	1296 334 004		2	AĞIR SERİ HİLAL PABUCU	SLIDING PAD		◆	◆		
10	K20.00652	1315 334 033		1	AĞIR SERİ HİLAL MİLİ	GEAR SHIFT		◆	◆		
11		1315 334 039		1	AĞIR SERİ HİLALİ	GEAR SHIFT FORK		◆	◆		
12	K20.01016	0750 112 034		1	A.SERİ HİLAL MİL KEÇESİ	FLANGE PACKING	25x38x14.20mm	◆	◆		
13	K20.01024	0734 317 150		2	AĞIR SERİ HAVA KEÇESİ	SEALING RING	80x90x4.80mm	◆	◆		
14		1296 334 039		1	HİLAL MİL PİSTONU	PISTON		◆	◆		
15	K20.01657	0750 112 066		1	HİLAL MİL PİSTON FİBERİ	GUIDE RING		◆	◆		
16	K20.01774	0737 006 095		1	HİLAL MİL SOMUNU	NUT	M16x1.50mm	◆	◆		
17		0501 317 536		1	AĞIR SERİ SİLİNDİR ORİNGİ	O-RING		◆	◆		
18	K20.00844	1315 334 021		1	AĞIR SERİ SİLİNDİR GÖVDESİ	CYLINDER		◆	◆		
19		1297 332 122	(1297 332 002)	1	ŞANZIMAN HEYKEL BURCUI	BUSHING		◆	◆		
20	K20.00650	1315 332 003		1	ÇEMBER DİŞLİ 90 DİŞ	RING WHEEL 90 T		◆			
20	K20.00605	1295 332 086		1	ÇEMBER DİŞLİ 86 DİŞ	RING WHEEL 86 T			◆		
21	K20.01656	0730 505 056	(0730 505 055)	1	ÇEMBER DİŞLİ SEGMANI	SPRING RING	3.20mm	◆	◆		
22		0730 513 755		1	PLANET ÇAN DİŞ.BİL. SEGMANI	RETAINING RING	2.50mm	◆	◆		
22		0730 513 757		1	PLANET ÇAN DİŞ.BİL. SEGMANI	RETAINING RING	2.30mm	◆	◆		
23	K20.01133	0750 116 165	(0635 338 049)	1	PLANET ÇAN DİŞLİ BİLYASI	ROLLER BEARING	80.0X110.0X16mm	◆	◆		
24	K20.00651	1315 332 002		1	PLANET ÇAN DİŞLİ 90 DİŞ	CARRIER HUB 90 T		◆			
24	K20.00624	1313 332 020		1	PLANET ÇAN DİŞLİ 86 DİŞ	CARRIER HUB 86 T			◆		
25	K20.00157	1315 233 006		1	TEPSİ SENKROMENÇ	FLANGE		◆	◆		
26	K20.00038	1296 333 045	(1296 333 022)	2	AĞIR SERİ SENK.FRENLEME	SYNCHRONIZING CONE		◆	◆		
			(0769 174 091)								
27	K20.00185	1313 333 001		1	AĞIR SERİ YILDIZ DİŞLİ	GUIDE SLEEVE		◆	◆		
28	K20.00471	1240 304 278		9	AĞIR SERİ YILDIZ DİŞLİ FİŞEĞİ	PRESSURE PIECE		◆	◆		
29	K20.00470	0732 040 386		9	A.SERİ YILDIZ DİŞLİ FİŞEK YAYI	SPRING		◆	◆		
30	K20.00469	0732 040 385		9	A.SERİ YILDIZ DİŞLİ FİŞEK YAYI	SPRING		◆	◆		
31		0630 501 061		1	A.SERİ YILDIZ DİŞLİ SEGMANI	RETAINING RING		◆	◆		
32	K20.00039	1296 333 023	(0769 186 286)	1	AĞIR SERİ SENK.HALKA	ENGAGING SLEEVE		◆	◆		
33	K20.00006	1313 233 001	(1297 233 018)	1	SERİ SENKROMENÇ	ENGAGING RING		◆	◆		
34	K20.00402	1315 233 023		1	SERİ SENKROMENÇ	ENGAGING RING	Retarder	◆	◆		
35	K20.00649	6085 301 012		1	RETARDER DİŞ. KARŞILIĞI 29 DİŞ	GEAR 29 T	Retarder	◆	◆		
36		1315 301 118		1	ŞANZ.ARKA GÖVDE PLEYTİ	INTERM.PLATE		◆	◆		

NOTES :

X1,X2 are used conjunction with the encoded parts

NOTLAR :

X1,X2 ile kodlanan parçalar birlikte kullanılır.

Original parts names, oem numbers, symbols and descriptions used in this catalogue are for reference purposes only.

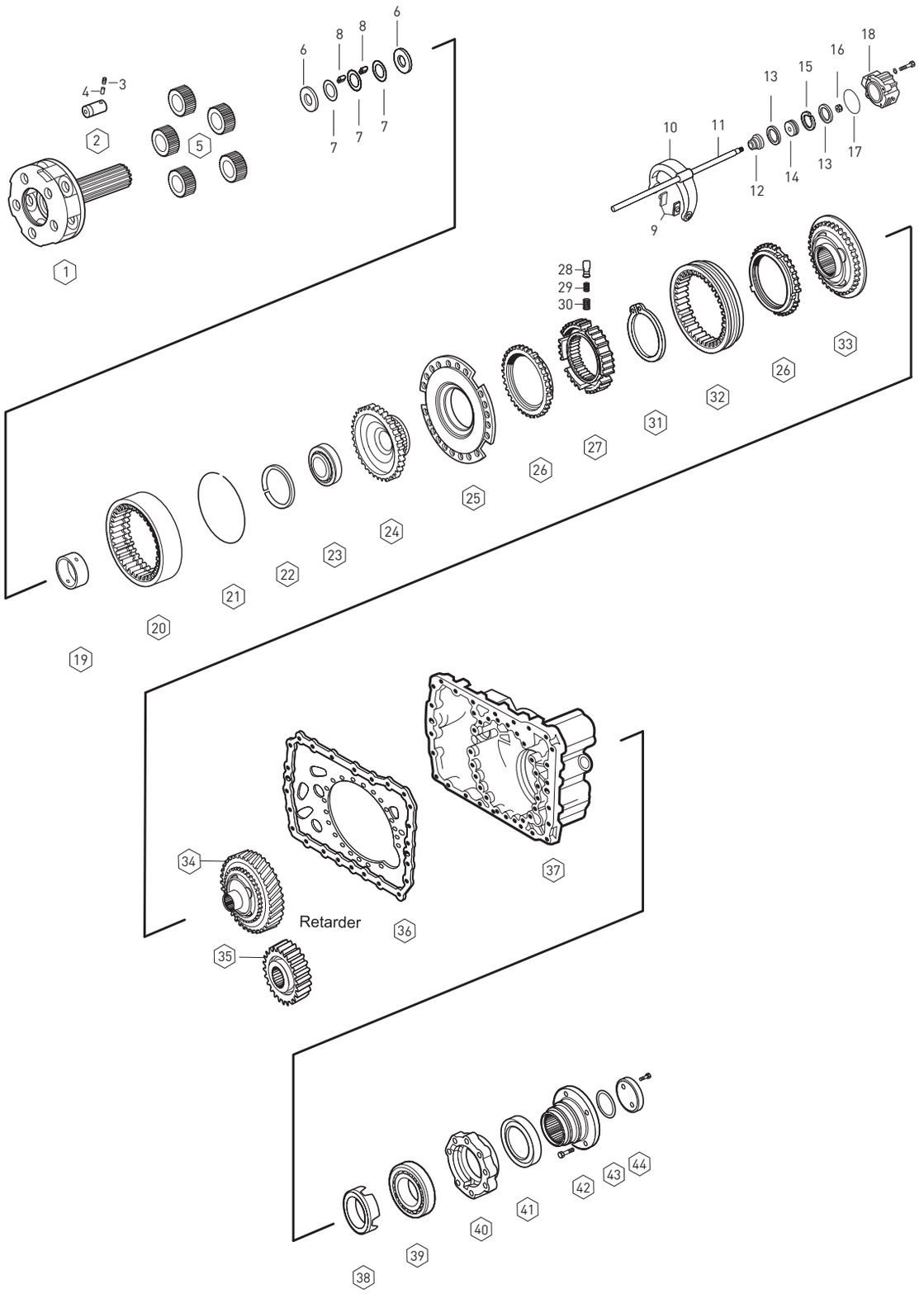

Original parts names, oem numbers, symbols and descriptions used in this catalogue are for reference purposes only.

Fig.	Kacmaz No.	Oem No	Oem Old No	Pcs.	Ürün Tanımı	Description	Sizes	(X1):SG 13.85-0.84	(X2):DG 16.53-1.00		
37		1315 301 083		1	ŞANZIMAN ARKA GÖVDE	HOUSING		◆	◆		
38		1313 238 001		1	ŞANZIMAN KM DEVİR SACI	PULSE STAR		◆	◆		
39	K20.01134	0750 116 394	(0750 116 002)	1	ŞANZIMAN ARKA BİLYA	ROLLER BEARING	90x160x30mm	◆	◆		
			(0635 304 904)								
40		1315 231 004		1	ŞANZIMAN ARKA KAPAK	COVER	105x130x12mm	◆	◆		
41	K20.01013	0750 111 341		1	ŞANZIMAN ARKA KAPAK KEÇESİ	OIL SEAL	105x125x12mm	◆	◆		
41	K20.01022	0734 319 459	(0734 300 421)	1	ŞANZIMAN ARKA KAPAK KEÇESİ	OIL SEAL	4-H, Ø180mm	◆	◆		
42	K20.00404	1313 338 002		1	ŞANZIMAN FLANŞI	COMPANION FLANGE	68x4mm	◆	◆		
43		0634 314 015		1	ŞANZIMAN FLANŞ ORİNGİ	O-RING		◆	◆		
44	K20.01661	1295 332 051		1	ŞANZIMAN FLANŞ PULU	WASHER		◆	◆		

NOTES :
X1,X2 are used conjunction with the encoded parts

NOTLAR :
X1,X2 ile kodlanan parçalar birlikte kullanılır.

SYNCHRONIZER KIT CONST.

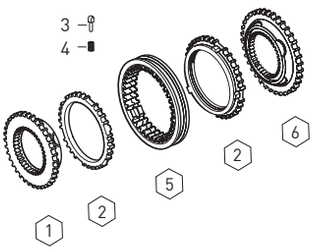

Fig.	Kacmaz No.	Oem No	Oem Old No	Pcs.	Ürün Tanımı	Description
	K20.00522	1297 298 955		Kit	TAKVİYE SENKROMENÇ KİT	SYNCHRONIZER KIT Const
1	K20.00101	1312 304 027		1	TAKVİYE SENKROMENÇ	ENGAGING RING
2	K20.00108	1297 304 484	(1297 304 402)	2	TAKVİYE SENK.FRENLEME	SYNCHRONIZING CONE
3	K20.00111	1297 304 436		3	TAK.YILDIZ DİŞLİ FİŞEĞİ	PRESSURE PIECE
4	K20.00110	0732 040 409		3	TAKVİYE YILDIZ DİŞLİ YAYI	SPRING
5	K20.00098	1310 304 202	(1312 302 057)	1	TAKVİYE SENK.HALKA	ENGAGING SLEEVE
6	K20.00097	1312 304 056		1	TAKVİYE SENKROMENÇ	ENGAGING RING

SYNCHRONIZER KIT 3rd/4th

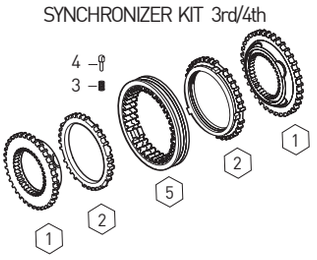

Fig.	Kacmaz No.	Oem No	Oem Old No	Pcs.	Ürün Tanımı	Description
	K20.00524	1315 298 030		Kit	3./4.VİT.SENKROMENÇ KİT	SYNCH.KIT 3rd/4th
1	K20.00101	1312 304 027		2	3./4.VİT.SENKROMENÇ	ENGAGING RING
2	K20.00108	1297 304 484	(1297 304 402)	2	3./4.VİT.SENK.FRENLEME	SYNCHRONIZING CONE
3	K20.00111	1297 304 436		3	3./4.VİT.YILDIZ DİŞLİ FİŞEĞİ	PRESSURE PIECE
4	K20.00110	0732 040 409		3	3./4.VİT.YILDIZ DİŞLİ YAYI	SPRING
5	K20.00098	1310 304 202	(1312 302 057)	1	3./4.VİT.SENK.HALKA	ENGAGING SLEEVE

SYNCHRONIZER KIT 3rd/4th

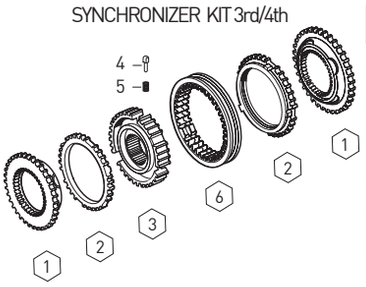

Fig.	Kacmaz No.	Oem No	Oem Old No	Pcs.	Ürün Tanımı	Description
	K20.00383	1315 298 018		Kit	3./4.VİT.SENKROMENÇ KİT	SYNCH.KIT 3rd/4th
1	K20.00101	1312 304 027		2	3./4.VİT.SENKROMENÇ	ENGAGING RING
2	K20.00108	1297 304 484	(1297 304 402)	2	3./4.VİT.SENK.FRENLEME	SYNCHRONIZING CONE
3	K20.00181	1312 304 052		1	3./4.VİT.YILDIZ DİŞLİ	GUIDE SLEEVE
4	K20.00111	1297 304 436		3	3./4.VİT.YILDIZ DİŞLİ FİŞEĞİ	PRESSURE PIECE
5	K20.00110	0732 040 409		3	3./4.VİT.YILDIZ DİŞLİ YAYI	SPRING
6	K20.00098	1310 304 202	(1312 302 057)	1	3./4.VİT.SENK.HALKA	ENGAGING SLEEVE

SYNCHRONIZER KIT 3rd/4th

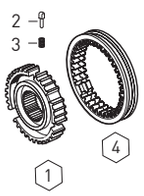

Fig.	Kacmaz No.	Oem No	Oem Old No	Pcs.	Ürün Tanımı	Description
	K20.00525	1312 204 028		Kit	3./4.VİT.HALKA YILDIZ KİTİ	SYNCH.KIT 3rd/4th
1	K20.00181	1312 304 052		1	3./4.VİT.YILDIZ DİŞLİ	GUIDE SLEEVE
2	K20.00111	1297 304 436		3	3./4.VİT.YILDIZ DİŞLİ FİŞEĞİ	PRESSURE PIECE
3	K20.00110	0732 040 409		3	3./4.VİT.YILDIZ DİŞLİ YAYI	SPRING
4	K20.00098	1310 304 202	(1312 302 057)	1	3./4.VİT.SENK.HALKA	ENGAGING SLEEVE

SYNCHRONIZER KIT 3rd/4th/CONST.

Fig.	Kacmaz No.	Oem No	Oem Old No	Pcs.	Ürün Tanımı	Description
	K20.00523	1312 204 031		Kit	TAK.3./4.VİT.SENK.KİT	SYNCH.KIT 3rd/4th/Const.
1	K20.00101	1312 304 027		1	TAK.3./4.VİT.SENKROMENÇ	ENGAGING RING
2	K20.00108	1297 304 484	(1297 304 402)	1	TAK.3./4.VİT.FRENLEME	SYNCHRONIZING CONE

SYNCHRONIZER KIT 1st/2nd

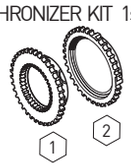

Fig.	Kacmaz No.	Oem No	Oem Old No	Pcs.	Ürün Tanımı	Description
	K20.00529	1313 204 009		Kit	1./2.VİT.SENKROMENÇ KİT	SYNCH.KIT 1st/2nd
1	K20.00182	1313 304 009		1	1./2.VİT.SENKROMENÇ	ENGAGING RING
2	K20.00112	1297 304 485	(1297 304 401)	1	1./2.VİT.SENK.FRENLEME	SYNCHRONIZING CONE

SYNCHRONIZER KIT 1st/2nd

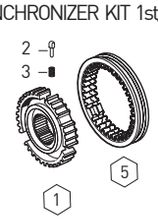

Fig.	Kacmaz No.	Oem No	Oem Old No	Pcs.	Ürün Tanımı	Description
	K20.00528	1313 204 008		Kit	1./2.VİT.HALKA YILDIZ KİTİ	SYNCH.KIT 1st/2nd
1	K20.00179	1313 304 008		1	1./2.VİT.YILDIZ DİŞLİ	GUIDE SLEEVE
2	K20.00111	1297 304 436		3	1./2.VİT.YILDIZ DİŞLİ FİŞEĞİ	PRESSURE PIECE
3	K20.00110	0732 040 409		3	1./2.VİT.YILDIZ DİŞLİ YAYI	SPRING
4	K20.00115	1316 304 078		1	1./2.VİT.SENK.HALKA	ENGAGING SLEEVE

SYNCHRONIZER KIT 1st/2nd

Fig.	Kacmaz No.	Oem No	Oem Old No	Pcs.	Ürün Tanımı	Description
	K20.00526	1313 204 003		Kit	1./2.VİT.SENKROMENÇ KİT	SYNCH.KIT 1st/2nd
1	K20.00112	1297 304 485	(1297 304 401)	2	1./2.VİT.FRENLEME	SYNCH.CONE
2	K20.00179	1313 304 008		1	1./2.VİT.YILDIZ DİŞLİ	GUIDE SLEEVE
3	K20.00111	1297 304 436		3	1./2.VİT.YILDIZ DİŞLİ FİŞEĞİ	PRESSURE PIECE
4	K20.00110	0732 040 409		3	1./2.VİT.YILDIZ DİŞLİ YAYI	SPRING
5	K20.00115	1316 304 078		1	1./2.VİT.SENK.HALKA	ENGAGING SLEEVE

Original parts names, oem numbers, symbols and descriptions used in this catalogue are for reference purposes only.

Fig.	Kacmaz No.	Oem No	Oem Old No	Pcs.	Ürün Tanımı	Description
	K20.00527	1313 298 909		kit	1./2.VİT.SENKROMENÇ KİT	SYNCH.KIT 1st/2nd
1	K20.00182	1313 304 009		2	1./2.VİT.SENKROMENÇ	ENGAGING RING
2	K20.00112	1297 304 485	(1297 304 401)	2	1./2.VİT.FRENLEME	SYNCH.CONE
3	K20.00179	1313 304 008		1	1./2.VİT.YILDIZ DİŞLİ	GUIDE SLEEVE
4	K20.00111	1297 304 436		3	1./2.VİT.YILDIZ DİŞLİ FİŞEĞİ	PRESSURE PIECE
5	K20.00110	0732 040 409		3	1./2.VİT.YILDIZ DİŞLİ YAYI	SPRING
6	K20.00115	1316 304 078		1	1./2.VİT.SENK.HALKA	ENGAGING SLEEVE

SYNCHRONIZER KIT 1st/2nd

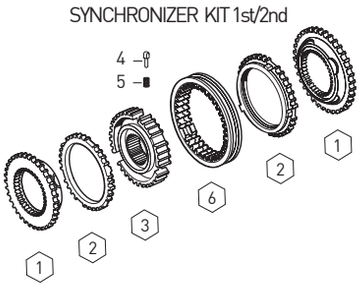

Fig.	Kacmaz No.	Oem No	Oem Old No	Pcs.	Ürün Tanımı	Description
	K20.00482	1315 204 006	(1312 298 911)	kit	1./2.VİT.SENKROMENÇ KİT	SYNCH.KIT 1st/2nd
1	K20.00143	1312 304 106		2	1./2.VİT.SENKROMENÇ	ENGAGING RING
2	K20.00144	1268 304 424		2	1./2.VİT.SENK.FRENLEME	SYNCHRONIZING CONE
3	K20.00302	1268 304 494	(1268 304 491)	2	1./2.VİT.SENK.FRENLEME	INTERMEDIATE CONE
4	K20.00145	1268 304 525		2	1./2.VİT.SENK.FRENLEME	SYNCHRONIZING CONE
5	K20.00146	1312 304 158		1	1./2.VİT.YILDIZ DİŞLİ	GUIDE SLEEVE
6	K20.00209	1312 304 159		3	1./2.VİT.YIL.DİŞLİ BAKLASI	SLIDING BLOCK
7	K20.00111	1297 304 436		3	1./2.VİT.YILDIZ DİŞLİ FİŞEĞİ	PRESSURE PIECE
8	K20.00110	0732 040 409		3	1./2.VİT.YILDIZ DİŞLİ YAYI	SPRING
9	K20.00147	1310 304 175	(1312 304 157)	1	1./2.VİT.SENK.HALKA	ENGAGING SLEEVE

SYNCHRONIZER KIT 1st/2nd

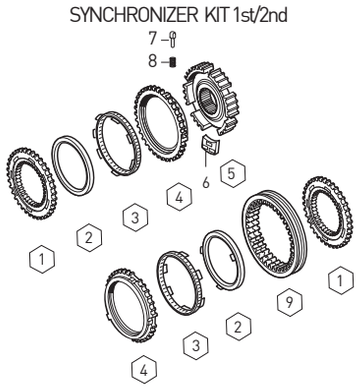

Fig.	Kacmaz No.	Oem No	Oem Old No	Pcs.	Ürün Tanımı	Description
	K20.00532	1315 233 029		kit	AĞIR SERİ SENK.KİT	SYNCHRONIZER KIT
1	K20.00038	1296 333 045	(1296 333 022)	2	AĞIR SERİ FRENLEME	SYNCHRONIZING CONE
2	K20.00185	1313 333 001		1	AĞIR SERİ YILDIZ DİŞLİ	GUIDE SLEEVE
3	K20.00469	0732 040 385		9	AĞIR SERİ YILDIZ DİŞLİ YAYI	SPRING
4	K20.00470	0732 040 386		9	AĞIR SERİ YILDIZ DİŞLİ YAYI	SPRING
5	K20.00471	1240 304 278		9	AĞIR SERİ YILDIZ DİŞ.FİŞEĞİ	PRESSURE PIECE
6	K20.00039	1296 333 023		1	AĞIR SERİ SENK.HALKA	ENGAGING SLEEVE

SYNCHRONIZER KIT PLANETARY

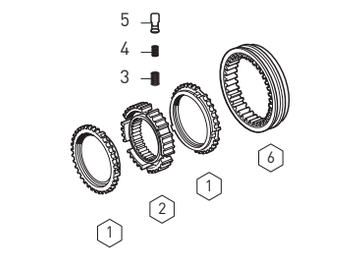

Fig.	Kacmaz No.	Oem No	Oem Old No	Pcs.	Ürün Tanımı	Description
	K20.00544	1315 298 047		kit	AĞIR SERİ SENK.KİT	SYNCHRONIZER KIT
1	K20.00157	1315 233 006		1	TEPSİ SENKROMENÇ	FLANGE
2	K20.00038	1296 333 045	(1296 333 022)	2	AĞIR SERİ FRENLEME	SYNCHRONIZING CONE
3	K20.00469	0732 040 385		9	AĞIR SERİ YILDIZ DİŞLİ YAYI	SPRING
4	K20.00470	0732 040 386		9	AĞIR SERİ YILDIZ DİŞLİ YAYI	SPRING
5	K20.00471	1240 304 278		9	AĞIR SERİ YILDIZ DİŞ.FİŞEĞİ	PRESSURE PIECE
6	K20.00039	1296 333 023		1	AĞIR SERİ SENK.HALKA	ENGAGING SLEEVE
7	K20.00006	1313 233 001	(1297 233 018)	1	SERİ SENKROMENÇ	ENGAGING RING

SYNCHRONIZER KIT PLANETARY

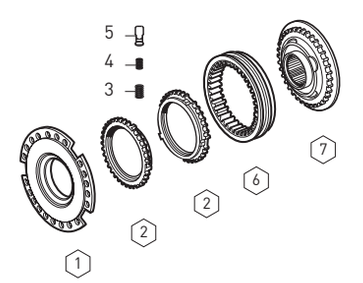

Fig.	Kacmaz No.	Oem No	Oem Old No	Pcs.	Ürün Tanımı	Description
1		1296 313 131		1	P.KİLİT EMNİYET SACI	RETAINING RING
2		0730 104 627		1	PARÇALI KİLİT	SPLIT RING
3		1296 313 238		1	PTO MİL KOVANI	SLIDING SLEEVE
4		0730 104 628		1	PTO DİŞLİ AYAR PULU	THRUST WASHER
5		1296 313 082		1	PTO DİŞLİ	GEAR 33 T
5		1296 313 083		1	PTO DİŞLİ	GEAR 36 T
5		1296 313 084		1	PTO DİŞLİ	GEAR 38 T
5		1296 313 085		1	PTO DİŞLİ	GEAR 39 T
5		1296 313 086		1	PTO DİŞLİ	GEAR 46 T
6	K20.00556	1296 213 028		1	PTO MİLİ DÜZ	INTERM.SHAFT
7	K20.00555	1296 213 028		1	PTO MİLİ FREZELİ	INTERM.SHAFT (Milled)
8		1296 313 125		1	PTO MİL SOMUNU	NUT
9		0735 410 139		1	PTO MİL BİLYASI	ROLLER BEARING
10		7429 032 102		1	PTO BİLYA KAPAK PULU	THRUST WASHER
11		1232 304 062		1	PTO BİLYA KAPAK RAYNELİ	SHIM (1.00mm)
11		1232 304 063		1	PTO BİLYA KAPAK RAYNELİ	SHIM (0.90mm)
11		1232 304 072		1	PTO BİLYA KAPAK RAYNELİ	SHIM (0.70mm)
12		1250 313 190		1	PTO BAĞLANTI KAPAĞI	COVER
13	K20.01013	0750 111 341		1	ŞANZ.ARKA KAPAK KEÇESİ	OIL SEAL

P.T.O. (POWER TAKE OFF)

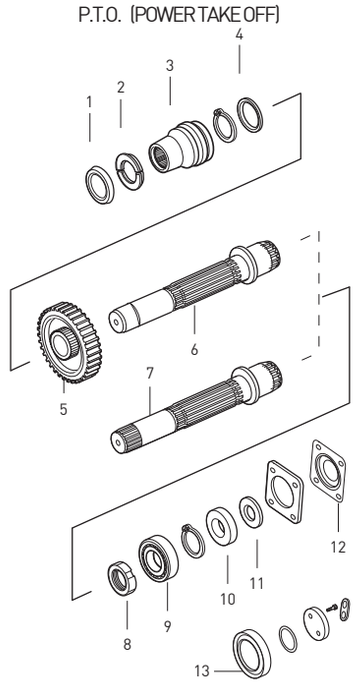

Original parts names, oem numbers, symbols and descriptions used in this catalogue are for reference purposes only.

GEARBOX GASKET KIT

Fig.	Kacmaz No.	Oem No	Oem Old No	Pcs.	Ürün Tanımı	Description
1	K20.01585	1315 298 001		Kit	ŞANZIMAN CONTA TAKIMI	GASKET KIT
2		1315 301 233		1	ŞANZ.ÖN GÖVDE CONTASI	GASKET
3		0501 314 246		1	PRİZ.KEÇE KAPAK CONTASI	GASKET
3		0501 314 587		1	PRİZ.KEÇE KAPAK CONTASI	GASKET
4		1316 301 042		2	ŞANZ.ARKA GÖVDE CONTASI	GASKET
4		1315 301 007		2	ŞANZ.ARKA GÖVDE CONTASI	GASKET
5		0501 318 308		2	ŞANZ.KULE KAPAK CONTASI	GASKET
6		1315 307 012		1	ŞANZ.KULESİ GÖVDE CONTASI	GASKET
7		1315 307 013		1	ŞANZ.KULE ALT KAPAK CONTASI	GASKET
8		0501 317 240		1	ŞANZ.KULE ÜST KAPAK CONTASI	GASKET
9		1315 331 001		1	ŞANZ.BİLYA KAPAK CONTASI	GASKET
10	K20.02108	1238 308 201		1	PTO BAĞLANTI KAPAK CONTASI	GASKET
11		0501 316 146		1	ŞANZ.DAMPER CONTASI	GASKET
11		1315 301 234		1	ŞANZ.DAMPER CONTASI	GASKET
12		1316 301 022		1	ŞANZ.MÜŞÜR KAPAK CONTASI	GASKET
13		1315 303 060		1	YAĞ POMPA CONTASI	GASKET
14		1315 307 242		1	SERVO KULE PİSTON CONTASI	GASKET

GEARBOX GASKET KIT

Fig.	Kacmaz No.	Oem No	Oem Old No	Pcs.	Ürün Tanımı	Description	Sizes
	K20.01039	1315 298 002		Kit	KEÇE TAKIMI	SEAL KIT	
1	K20.01037	0634 300 302	(0734 300 196)	1	KEÇE	OIL SEAL	25X35X7mm
2	K20.01036	0634 307 367		1	KEÇE	OIL SEAL	25X35X7/10mm
3	K20.01008	0734 310 104		1	PRİZDİREK KEÇESİ	OIL SEAL	52X68X8mm
4	K20.01034	0501 312 738	(0501 325 918)	4	KEÇE	OIL SEAL	30X37X4mm
5	K20.01035	0634 300 020		1	KEÇE	OIL SEAL	25X32X5mm
6	K20.01003	0734 310 387	(0734 310 311)	1	PRİZDİREK KEÇESİ	OIL SEAL	55X75X8mm
7	K20.01038	0734 309 765	(0734 309 376)	1	KEÇE	OIL SEAL	28X42X11mm
8	K20.01013	0750 111 341	(0734 319 551)	1	ŞANZ.FLANŞ KEÇESİ	OIL SEAL	105X130X12mm

GEARBOX GASKET KIT

Fig.	Kacmaz No.	Oem No	Oem Old No	Pcs.	Ürün Tanımı	Description	Sizes
	K20.01044	1315 298 003		kit	KEÇE TAKIMI	SEAL KIT	
1	K20.01016	0750 112 034		2	TAK.HİLAL MİL KEÇESİ	OIL SEAL	25X38X14.2mm
2	K20.01026	0750 112 131		2	HİLAL MİL KEÇESİ	OIL SEAL	25X40X15mm
3	K20.01019	0734 307 294	(0734 307 280)	2	A.SERİ HAVA KEÇESİ	OIL SEAL	50X91X7.5mm
4	K20.01024	0734 317 150	(0750 112 019)	2	A.SERİ HAVA KEÇESİ	OIL SEAL	80X90X4.8mm
5	K20.01779	0501 324 670		1	TAK.SİLİNDİR PİSTONU	PISTON	
6	K20.01657	0750 112 066	(0501 307 769)	1	A.SERİ HİLAL MİL FİBERİ	RING	85X90X5.5mm
7	K20.01020	0750 112 177		1	SİLİNDİR HAVA KEÇESİ	OIL SEAL	55X63X9.4mm
8		0634 801 062		12	ALM.PUL	SEAL RING	18X24X1.4mm
9		0634 801 097		1	ALM.PUL	WASHER	30X36mm
10		0634 801 173		5	ALM.PUL	WASHER	22X27mm
11		0634 801 203		1	ALM.PUL	SEAL RING	16X22X1.4mm
12		0634 801 206		5	ALM.PUL	SEAL RING	24X29mm
13		0634 801 219		2	ALM.PUL	SEAL RING	16X22X1.4mm
14		0634 801 249		1	ALM.PUL	SEAL RING	
15		0634 801 321		1	ALM.PUL	WASHER	
16		0730 008 055		1	ALM.PUL	WASHER	
17		0730 008 056		1	ALM.PUL	WASHER	
18		0730 008 057		8	ALM.PUL	WASHER	
19		0734 303 046		1	ORİNG	O-RING	
20		0634 314 020		4	ORİNG	O-RING	
21		0634 313 198		1	ORİNG	O-RING	
22		0634 313 293		1	ORİNG	O-RING	
23		0634 313 320		1	ORİNG	O-RING	
24		0634 313 018		1	ORİNG	O-RING	
25		0634 313 505		1	ORİNG	O-RING	
26		0634 314 015		1	ORİNG	O-RING	
27	K20.02113	0634 313 805		1	ORİNG	O-RING	
28		0634 314 021		2	ORİNG	O-RING	
29		0634 312 523		1	LASTİK KEÇE	RING	
30		0501 317 536		1	KANALLI ORİNG	RING	

Original parts names, oem numbers, symbols and descriptions used in this catalogue are for reference purposes only.

ECOSPLIT III	NEW ECOSPLIT
16 S 151 NEW	16 S 1620 TO 16 S 1620 TD 16 S 1621 TO 16 S 1621 TD 16 S 1625 TO 16 S 1625 TD 16 S 1820 TO 16 S 1820 TD 16 S 1821 TO 16 S 1821 TD 16 S 1822 TO 16 S 1822 TD 16 S 1823 TO 16 S 1823 TD 16 S 1825 TO 16 S 1825 TD

Original parts names, oem numbers, symbols and descriptions used in this catalogue are for reference purposes only.

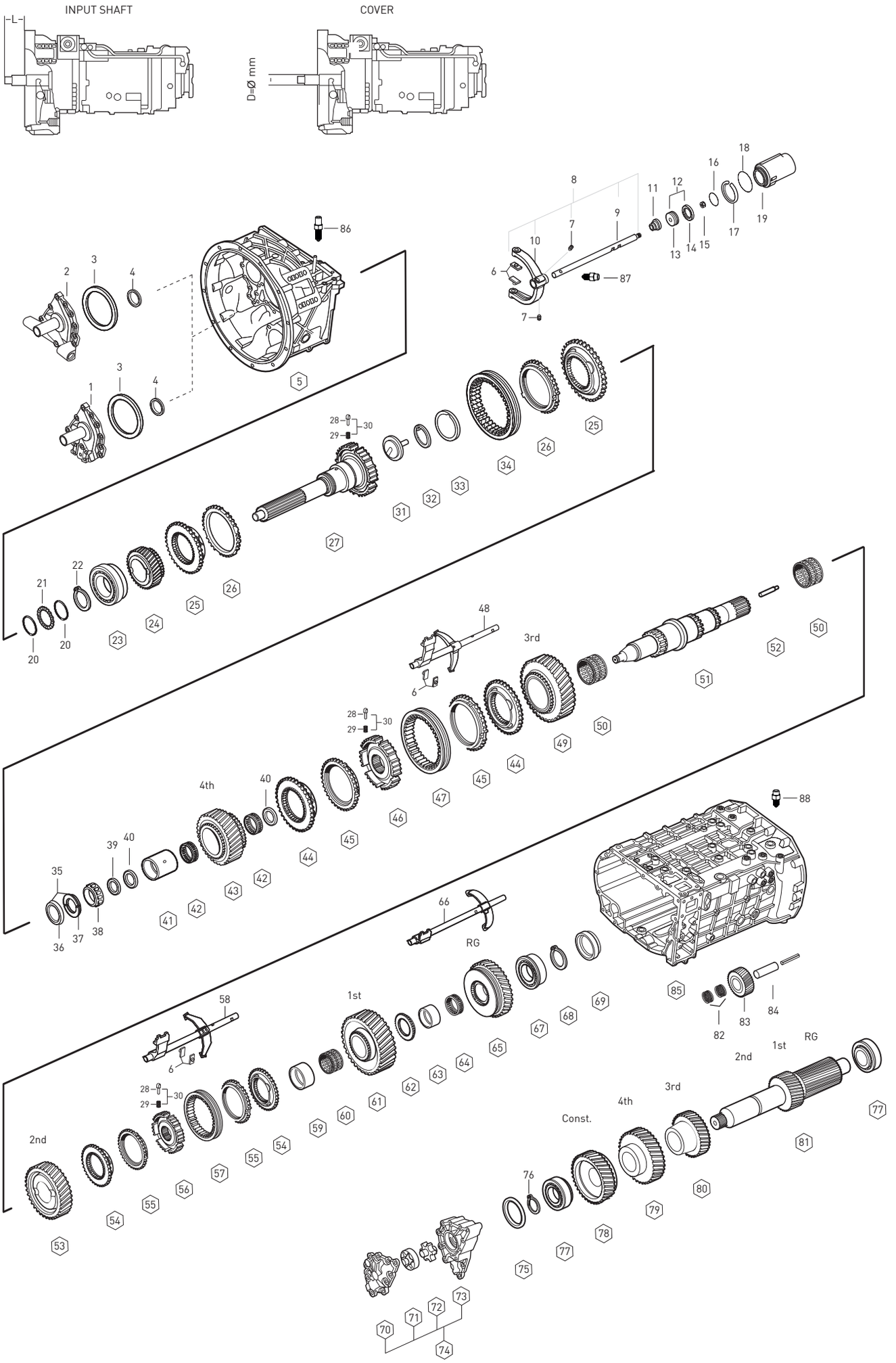

Original parts names, oem numbers, symbols and descriptions used in this catalogue are for reference purposes only.

Fig.	Kacmaz No.	Oem No	Oem Old No	Pcs.	Ürün Tanımı	Description	Sizes	Not	(X1).SG-TO 13.80-0.84	(X2).DG-TD 16.41-1.00		
1	K20.00560	1315 302 136	(1315 402 136)	1	PRİZDİREK KEÇE KAPAĞI	COVER	L=7 D=60	(M)(R)(B)	◆	◆		
1	K20.00559	1315 302 075	(1315 402 075)	1	PRİZDİREK KEÇE KAPAĞI	COVER	L=7 D=60	(D)	◆	◆		
2	K20.00663	1315 302 134	(1315 302 122)	1	PRİZDİREK KEÇE KAPAĞI	COVER		(M)	◆	◆		
2	K20.00634	1315 302 106	(1315 402 106)	1	PRİZDİREK KEÇE KAPAĞI	COVER	L=7 D=66	(R)	◆	◆		
2	K20.00653	1315 302 072	(1315 402 072)	1	PRİZDİREK KEÇE KAPAĞI	COVER	L=3 D=62.6	(I)	◆	◆		
2		1315 202 060	(4130 306 306)	1	PRİZDİREK KEÇE KAPAĞI	COVER		(WSK)	◆	◆		
3	K20.01683	0730 007 486		1	PRİZ.ÖN BİLYA RAYNELİ	SHIM	2.00mm		◆	◆		
3	K20.01684	0730 007 483		1	PRİZ.ÖN BİLYA RAYNELİ	SHIM	1.85mm		◆	◆		
3	K20.01685	0730 007 479		1	PRİZ.ÖN BİLYA RAYNELİ	SHIM	1.65mm		◆	◆		
3	K20.01686	0730 007 136		1	PRİZ.ÖN BİLYA RAYNELİ	SHIM	1.60mm		◆	◆		
3	K20.01687	0730 007 129		1	PRİZ.ÖN BİLYA RAYNELİ	SHIM	1.25mm		◆	◆		
3	K20.01668	0730 005 748		1	PRİZ.ÖN BİLYA RAYNELİ	SHIM	0.90mm		◆	◆		
3	K20.01671	2050 309 067		1	PRİZ.ÖN BİLYA RAYNELİ	SHIM	0.30mm		◆	◆		
3	K20.01582	0730 005 747		1	PRİZ.ÖN BİLYA RAYNELİ	SHIM	0.25mm		◆	◆		
3	K20.01672	2050 309 068		1	PRİZ.ÖN BİLYA RAYNELİ	SHIM	0.20mm		◆	◆		
3	K20.01673	2001673		1	PRİZ.ÖN BİLYA RAYNELİ	SHIM	0.10mm		◆	◆		
4	K20.01003	0734 310 387	(0734 310 386)	1	PRİZDİREK ÖN KEÇE	OIL SEAL	55x75x8mm		◆	◆		
4	K20.01008	0734 310 104		1	PRİZDİREK ÖN KEÇE	OIL SEAL	52x68x8mm	(WSK)	◆	◆		
5		1316 201 142	(1316 301 064)	1	ŞANZIMAN ÖN GÖVDE	HOUSING			◆	◆		
5		1316 201 149		1	ŞANZIMAN ÖN GÖVDE	HOUSING			◆	◆		
5		1316 221 015		1	ŞANZIMAN ÖN GÖVDE	HOUSING		(NMW)	◆	◆		
6	K20.00325	1316 306 015		6	TAK.-1-2-3-4.VİT.HİL.PABUCU	SLIDING PAD			◆	◆		
7	K20.01688	1315 312 047		2	TAK.HİLAL VİDASI	SCREW	M12x1.00mm		◆	◆		
8	K20.00637	1315 212 013		1	TAKVİYE HİLALİ KOMPLE	G.S.FORK and RAIL ASSY.			◆	◆		
9	K20.00636	1315 312 073		1	TAKVİYE HİLAL MİLİ	G SHIFT RAIL			◆	◆		
10	K20.00635	1315 312 074		1	TAKVİYE HİLALİ	G SHIFT FORK			◆	◆		
11	K20.01026	0750 112 253	(0750 112 131)	1	TAKVİYE HİLAL MİL KEÇESİ	FLANGE PACKING	25x40x14.50mm		◆	◆		
12	K20.01779	0501 324 670		1	TAKVİYE PİSTON SİLİNDİRİ	PISTON			◆	◆		
13	K20.01772	1315 312 020		1	TAKVİYE HİLAL MİL PİSTON	PISTON			◆	◆		
14	K20.01020	0750 112 177		1	TAKVİYE HAVA KEÇESİ	DOUBLE PACKING	55x63x9.40mm		◆	◆		
15	K20.01774	0737 006 095		1	TAK.HİLAL MİL SOMUNU	NUT	M16x1.50mm		◆	◆		
16		0634 313 320		1	TAKVİYE SİLİNDİR ORİNGİ	O-RING			◆	◆		
17	K20.01689	1315 312 034		1	TAKVİYE SİLİNDİR SEGMANI	RETAINING RING			◆	◆		
18		0634 313 018		1	TAKVİYE SİLİNDİR ORİNGİ	O-RING			◆	◆		
19	K20.00877	1315 312 048		1	TAKVİYE SİLİNDİR GÖVDESİ	CYLINDER			◆	◆		
20	K20.01530	0730 150 766		2	P.DİREK YAĞLAMA PULU	THRUST WASHER			◆	◆		
21		1315 302 040		1	P.DİREK YAĞLAMA SACI	SPACER RING			◆	◆		
22	K20.01897	0730 501 598		1	P.DİREK B.BİLYA SEGMANI	RETAINING RING			◆	◆		
23	K20.01104	0750 117 732		1	PRİZDİREK ÖN BİLYA	ROLLER BEARING	80x150x30.50mm		◆	◆		
24	K20.00162	1315 302 158		1	TAKVİYE DİŞLİSİ 35 DİŞ	CONSTANT GEAR 35 T			◆			
24	K20.00163	1315 302 157		1	TAKVİYE DİŞLİSİ 30 DİŞ	CONSTANT GEAR 30T				◆		

NOTES :

X1,X2 are used conjunction with the encoded parts.
Alphabetical Coding has been done according to Input Shaft
X1 : 16 S 151 SG, 16 S 1620 TO, 16 S 1621 TO
16 S 1625 TO, 16 S 1820 TO, 16 S 1821 TO 16 S 1822 TO
16 S 1823 TO, 16 S 1825 TO

X2 : 16 S 151 DG, 16 S 1620 TD, 16 S 1621 TD
16 S 1625 TD, 16 S 1820 TD, 16 S 1821 TD, 16 S 1822 TD
16 S 1823 TD, 16 S 1825 TD

NOTLAR :

X1,X2 ile kodlanan parçalar birlikte kullanılır.
Alfabetik kodlamalar prizdireklere göre yapılmıştır.
X1 : 16 S 151 SG, 16 S 1620 TO, 16 S 1621 TO
16 S 1625 TO, 16 S 1820 TO, 16 S 1821 TO 16 S 1822 TO
16 S 1823 TO, 16 S 1825 TO

X2 : 16 S 151 DG, 16 S 1620 TD, 16 S 1621 TD
16 S 1625 TD, 16 S 1820 TD, 16 S 1821 TD, 16 S 1822 TD
16 S 1823 TD, 16 S 1825 TD

Original parts names, oem numbers, symbols and descriptions used in this catalogue are for reference purposes only.

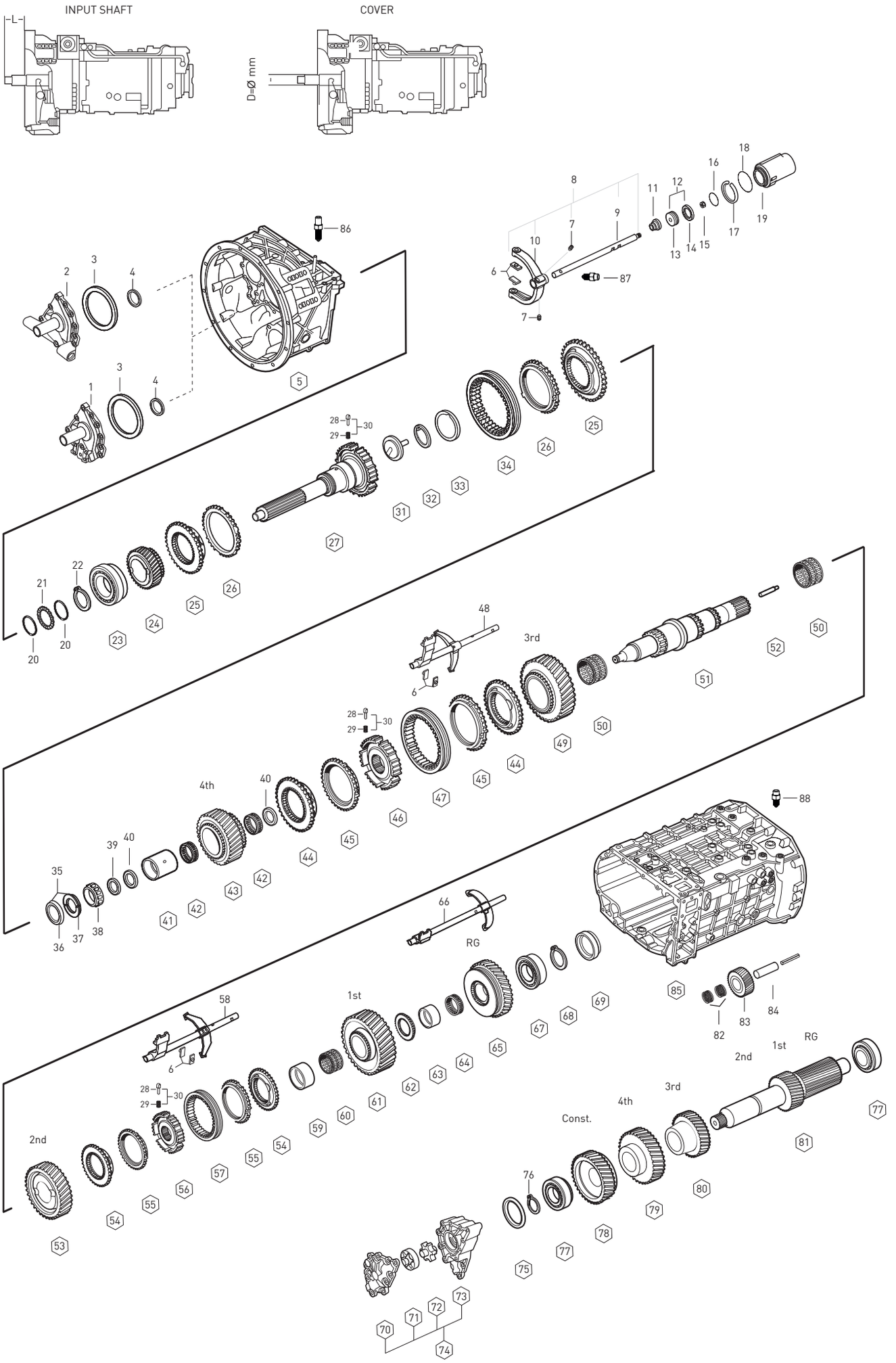

Original parts names, oem numbers, symbols and descriptions used in this catalogue are for reference purposes only.

Fig.	Kacmaz No.	Oem No	Oem Old No	Pcs.	Ürün Tanımı	Description	Sizes	Not	(X1).SG-TO 13.80-0.84	(X2).DG-TD 16.41-1.00		
25	K20.00101	1312 304 027		2	TAKVİYE SENKROMENÇ	ENGAGING RING			◆	◆		
26	K20.00108	1297 304 484	(1297 304 402)	2	TAKVİYE SENK.FRENLEME	SYNCHRONIZING CONE			◆	◆		
27	K20.00151	1315 202 037	(1315 302 153)	1	PRİZDİREK	INPUT SHAFT	L=109 SAE 2	(M)(R)(B)	◆	◆		
27	K20.00152	1315 202 040	(1315 302 162)	1	PRİZDİREK	INPUT SHAFT	L=117 SAE 2	(I)	◆	◆		
27	K20.00640	1315 202 038	(1315 302 164)	1	PRİZDİREK	INPUT SHAFT	L=109 SAE 2	(RVI)	◆	◆		
27	K20.00668	1315 202 070	(1315 302 203)	1	PRİZDİREK	INPUT SHAFT		(F)	◆	◆		
27	K20.00153	1315 202 048		1	PRİZDİREK	INPUT SHAFT		(WSK)	◆	◆		
27	K20.00154	1315 221 002		1	PRİZDİREK	INPUT SHAFT	L=109 SAE 2	(NMV)	◆	◆		
28	K20.00111	1297 304 436		9	PRİZ.veYILDIZ DİŞLİ FİŞEĞİ	PRESSURE PIECE			◆	◆		
29	K20.00110	0732 040 409		9	PRİZ.ve YILDIZ DİŞLİ YAYI	SPRING			◆	◆		
30	K20.01745	1295 298 956		kit	YAY FİŞEK TAKIMI	REPAIR KIT			◆	◆		
31	K20.01504	1315 302 196		1	PRİZDİREK YAĞ PİPETİ	OIL PIPET			◆	◆		
32	K20.01505	0630 502 027		1	P.DİREK YAĞ PİPETİ SEGM.	RETAINING RING	50x2mm		◆	◆		
33	K20.01011	0501 314 060	(0750 101 179)	1	P.DİREK ARKA KEÇE	OIL SEAL			◆	◆		
34	K20.00098	1310 304 202	(1310 304 174)	1	TAKVİYE VİTES SENK.HALKA	ENGAGING SLEEVE			◆	◆		
			(1312 302 057)									
35	K20.01561	1499 298 027		1	EMN.SACI VE P.KİLİT TAK.	SPLIT RING KIT	5.00mm		◆	◆		
35	K20.01563	1499 298 026		1	EMN.SACI VE P.KİLİT TAK.	SPLIT RING KIT	4.90mm		◆	◆		
35	K20.01580	2001580		1	EMN.SACI VE P.KİLİT TAK.	SPLIT RING KIT	4.85mm		◆	◆		
35	K20.01565	1499 298 025		1	EMN.SACI VE P.KİLİT TAK.	SPLIT RING KIT	4.80mm		◆	◆		
35	K20.01567	1499 298 024		1	EMN.SACI VE P.KİLİT TAK.	SPLIT RING KIT	4.70mm		◆	◆		
35	K20.01569	1499 298 023		1	EMN.SACI VE P.KİLİT TAK.	SPLIT RING KIT	4.60mm		◆	◆		
36	K20.01571	0730 062 781		1	P. KİLİT EMNİYET SACI	RETAINING RING			◆	◆		
37	K20.01562	0730 107 023		2	PARÇALI KİLİT	SPLIT RING	5.00mm		◆	◆		
37	K20.01564	0730 107 022		2	PARÇALI KİLİT	SPLIT RING	4.90mm		◆	◆		
37	K20.01581	2001581		2	PARÇALI KİLİT	SPLIT RING	4.85mm		◆	◆		
37	K20.01566	0730 107 021		2	PARÇALI KİLİT	SPLIT RING	4.80mm		◆	◆		
37	K20.01568	0730 107 020		2	PARÇALI KİLİT	SPLIT RING	4.70mm		◆	◆		
37	K20.01570	0730 107 019		2	PARÇALI KİLİT	SPLIT RING	4.60mm		◆	◆		
38	K20.01109	0750 117 232	(0735 371 563)	1	KAMALI MİL UÇ BİLYA	ROLLER BEARING	42x40.3mm		◆	◆		
39	K20.01781	1315 304 051		1	KAMALI MİL UÇ BİLYA PULU	THRUST WASHER	8.30mm		◆	◆		
39	K20.01527	1315 304 048		1	KAMALI MİL UÇ BİLYA PULU	THRUST WASHER	8.00mm		◆	◆		
39	K20.01528	1315 304 047		1	KAMALI MİL UÇ BİLYA PULU	THRUST WASHER	7.90mm		◆	◆		
39	K20.01529	1315 304 046		1	KAMALI MİL UÇ BİLYA PULU	THRUST WASHER	7.80mm		◆	◆		
39	K20.01762	1315 304 045		1	KAMALI MİL UÇ BİLYA PULU	THRUST WASHER	7.70mm		◆	◆		
39	K20.01763	1315 304 044		1	KAMALI MİL UÇ BİLYA PULU	THRUST WASHER	7.60mm		◆	◆		
39	K20.01764	1315 304 043		1	KAMALI MİL UÇ BİLYA PULU	THRUST WASHER	7.50mm		◆	◆		
39	K20.01765	1315 304 085		1	KAMALI MİL UÇ BİLYA PULU	THRUST WASHER	7.40mm		◆	◆		
39	K20.01766	1315 304 086		1	KAMALI MİL UÇ BİLYA PULU	THRUST WASHER	7.30mm		◆	◆		
40	K20.01533	0750 101 158		2	4.VİTES ÇANAK ALIN PULU	THRUST WASHER			◆	◆		
41	K20.00174	0750 119 125		1	4.VİT.MAS.BİLYA ÇANAĞI	BEARING RACE	67x77x54.10mm		◆	◆		

NOTES :

X1,X2 are used conjunction with the encoded parts.
Alphabetical Coding has been done according to Input Shaft
X1 : 16 S 151 SG, 16 S 1620 TO, 16 S 1621 TO
16 S 1625 TO, 16 S 1820 TO, 16 S 1821 TO 16 S 1822 TO
16 S 1823 TO, 16 S 1825 TO

X2 : 16 S 151 DG, 16 S 1620 TD, 16 S 1621 TD
16 S 1625 TD, 16 S 1820 TD, 16 S 1821 TD, 16 S 1822 TD
16 S 1823 TD, 16 S 1825 TD

NOTLAR :

X1,X2 ile kodlanan parçalar birlikte kullanılır.
Alfabetik kodlamalar prizdireklere göre yapılmıştır.
X1 : 16 S 151 SG, 16 S 1620 TO, 16 S 1621 TO
16 S 1625 TO, 16 S 1820 TO, 16 S 1821 TO 16 S 1822 TO
16 S 1823 TO, 16 S 1825 TO

X2 : 16 S 151 DG, 16 S 1620 TD, 16 S 1621 TD
16 S 1625 TD, 16 S 1820 TD, 16 S 1821 TD, 16 S 1822 TD
16 S 1823 TD, 16 S 1825 TD

Original parts names, oem numbers, symbols and descriptions used in this catalogue are for reference purposes only.

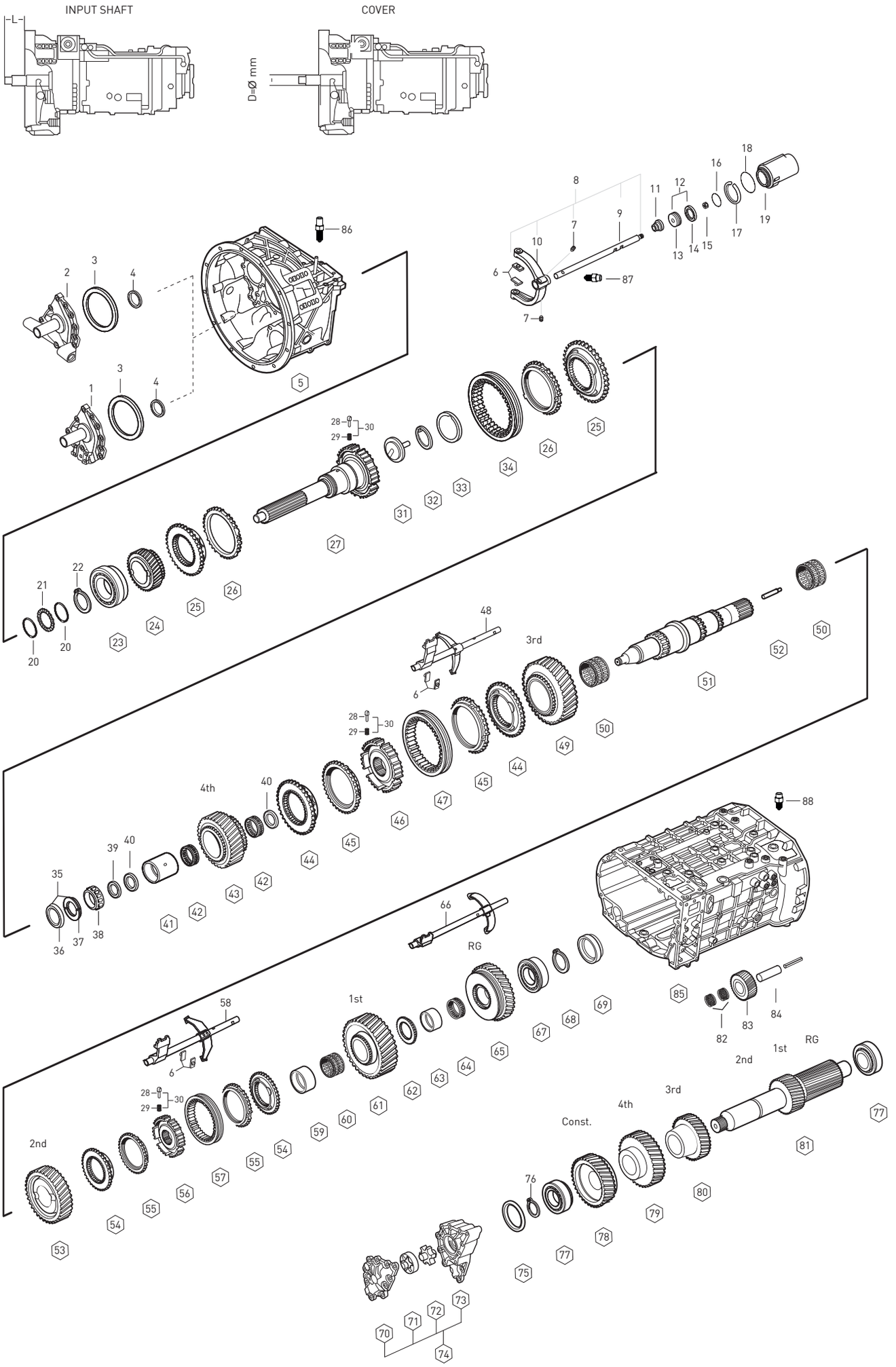

Original parts names, oem numbers, symbols and descriptions used in this catalogue are for reference purposes only.

Fig.	Kacmaz No.	Oem No	Oem Old No	Pcs.	Ürün Tanımı	Description	Sizes	Not	(X1)-SG-TO 13.80-0.84	(X2)-DG-TD 16.41-1.00
42	K20.01303	0750 115 531	(0750 115 534)	2	4.VİT.DİŞLİ MASURA BİLYA	NEEDLE CAGE	77x101x29mm		◆	◆
43	K20.00173	1315 304 089		1	4.VİTES DİŞLİSİ 32 DİŞ	GEAR 4th 32 T			◆	◆
44	K20.00102	1316 304 159	(1316 304 145)	2	3./ 4.VİT.SENKROMENÇ	ENGAGING RING			◆	◆
44	K20.00881	1316 304 190		2	3./ 4.VİT.SENKROMENÇ	ENGAGING RING	NEW		◆	◆
45	K20.00109	1316 304 168	(1316 304 149)	2	3./ 4.VİT.SENK.FRENLEME	SYNCHRONIZING CONE			◆	◆
45	K20.00880	1316 304 189		2	3./ 4.VİT.SENK.FRENLEME	SYNCHRONIZING CONE	NEW		◆	◆
46	K20.00136	1316 304 162		1	3./ 4.VİT.YILDIZ DİŞLİ	GUIDE SLEEVE			◆	◆
46	K20.00898	1356 304 019		1	3./ 4.VİT.YILDIZ DİŞLİ	GUIDE SLEEVE	NEW		◆	◆
47	K20.00103	1316 304 167	(0769 186 281)	1	3./ 4.VİT.SENK.HALKA	ENGAGING SLEEVE			◆	◆
			(1297 304 515)							
			(1315 304 135)							
47	K20.00871	1356 304 023	(1316 304 188)	1	3./ 4.VİT.SENK.HALKA	ENGAGING SLEEVE	NEW		◆	◆
48		1315 206 079		1	3./4.VİTES HİLALİ	GEAR SHIFT FORK 3rd/4th			◆	◆
49	K20.00176	1315 304 027		1	3.VİTES DİŞLİSİ 34 DİŞ	GEAR 3rd 34 T			◆	◆
50	K20.01322	0735 321 087	(0750 115 584)	2	2./3.VİTES MASURA BİLYA	NEEDLE CAGE	92x100x53mm		◆	◆
51	K20.00299	1315 304 131		1	KAMALI MİL	MAIN SHAFT			◆	◆
52	K20.01506	1324 304 014	(1312 304 150)	1	KAMALI MİL YAĞ BORUSU	OIL PIPE			◆	◆
53	K20.00178	1315 304 025		1	2.VİTES DİŞLİSİ 38 DİŞ	GEAR 2nd 38 T			◆	◆
54	K20.00183	1316 304 156		2	1./ 2.VİTES SENKROMENÇ	ENGAGING RING			◆	◆
54	K20.00910	1316 304 146		2	1./ 2.VİTES SENKROMENÇ	ENGAGING RING			◆	◆
55	K20.00113	1316 304 170	(1316 304 150)	2	1./ 2.VİT.SENK.FRENLEME	SYNCHRONIZING CONE			◆	◆
56	K20.00180	1316 304 163	(1316 304 148)	1	1./ 2.VİT.YILDIZ DİŞLİ	GUIDE SLEEVE			◆	◆
56	K20.00889	1356 304 022		1	1./ 2.VİT.YILDIZ DİŞLİ	GUIDE SLEEVE	NEW		◆	◆
57	K20.00114	1316 304 169	(1315 304 136)	1	1./ 2.VİT.SENK.HALKA	ENGAGING SLEEVE			◆	◆
57	K20.00803	1356 304 024		1	1./ 2.VİT.SENK.HALKA	ENGAGING SLEEVE	NEW		◆	◆
58		1315 206 076		1	1./2.VİTES HİLALİ	GEAR SHIFT FORK 1st/2nd			◆	◆
59	K20.00374	1313 304 038		1	1.VİTES MAS.BİLYA ÇANAĞI	BEARING RACE			◆	◆
60	K20.01323	0750 115 325		1	1.VİTES MASURA BİLYA	NEEDLE CAGE	96x104x55mm		◆	◆
61	K20.00391	1315 304 004		1	1.VİTES DİŞLİSİ 47 DİŞ	GEAR 1st 47 T			◆	◆
62	K20.00393	1315 304 018		1	GERİ VİTES YILDIZ DİŞLİ	HUB			◆	◆
63	K20.00378	1315 304 132	(1313 304 036)	1	GERİ VİT.MAS.BİLYA ÇANAĞI	BEARING RACE			◆	◆
64	K20.01324	0750 115 324		1	GERİ VİTES MASURA BİLYA	NEEDLE CAGE	90x98x41mm		◆	◆
65	K20.00395	1315 304 006	(1315 304 380)	1	GERİ VİTES DİŞLİSİ 44 DİŞ	REVERSE GEAR 44 T			◆	◆
66		1315 206 083		1	GERİ VİTES HİLALİ	GEAR SHIFT FORK/RG			◆	◆
67	K20.01119	0750 117 677		1	KAMALI MİL ARKA BİLYA	ROLLER BEARING	80x130x36mm		◆	◆
68	K20.02151	0630 501 339		1	K.MİL ARKA BİLYA SEGMANI	RETAINING RING	80x3.65mm		◆	◆
68		0630 501 338		1	K.MİL ARKA BİLYA SEGMANI	RETAINING RING	80x3.60mm		◆	◆
68	K20.02146	0630 501 316		1	K.MİL ARKA BİLYA SEGMANI	RETAINING RING	80x3.50mm		◆	◆
68	K20.02147	0630 501 315		1	K.MİL ARKA BİLYA SEGMANI	RETAINING RING	80x3.40mm		◆	◆
68	K20.02141	0630 501 314		1	K.MİL ARKA BİLYA SEGMANI	RETAINING RING	80x3.30mm		◆	◆
68	K20.02148	0630 501 313		1	K.MİL ARKA BİLYA SEGMANI	RETAINING RING	80x3.20mm		◆	◆

NOTES :

X1,X2 are used conjunction with the encoded parts.
Alphabetical Coding has been done according to Input Shaft
X1 : 16 S 151 SG, 16 S 1620 TO, 16 S 1621 TO
16 S 1625 TO, 16 S 1820 TO, 16 S 1821 TO 16 S 1822 TO
16 S 1823 TO, 16 S 1825 TO

X2 : 16 S 151 DG, 16 S 1620 TD, 16 S 1621 TD
16 S 1625 TD, 16 S 1820 TD, 16 S 1821 TD, 16 S 1822 TD
16 S 1823 TD, 16 S 1825 TD

NOTLAR :

X1,X2 ile kodlanan parçalar birlikte kullanılır.
Alfabetik kodlamalar prizdireklere göre yapılmıştır.
X1 : 16 S 151 SG, 16 S 1620 TO, 16 S 1621 TO
16 S 1625 TO, 16 S 1820 TO, 16 S 1821 TO 16 S 1822 TO
16 S 1823 TO, 16 S 1825 TO

X2 : 16 S 151 DG, 16 S 1620 TD, 16 S 1621 TD
16 S 1625 TD, 16 S 1820 TD, 16 S 1821 TD, 16 S 1822 TD
16 S 1823 TD, 16 S 1825 TD

Original parts names, oem numbers, symbols and descriptions used in this catalogue are for reference purposes only.

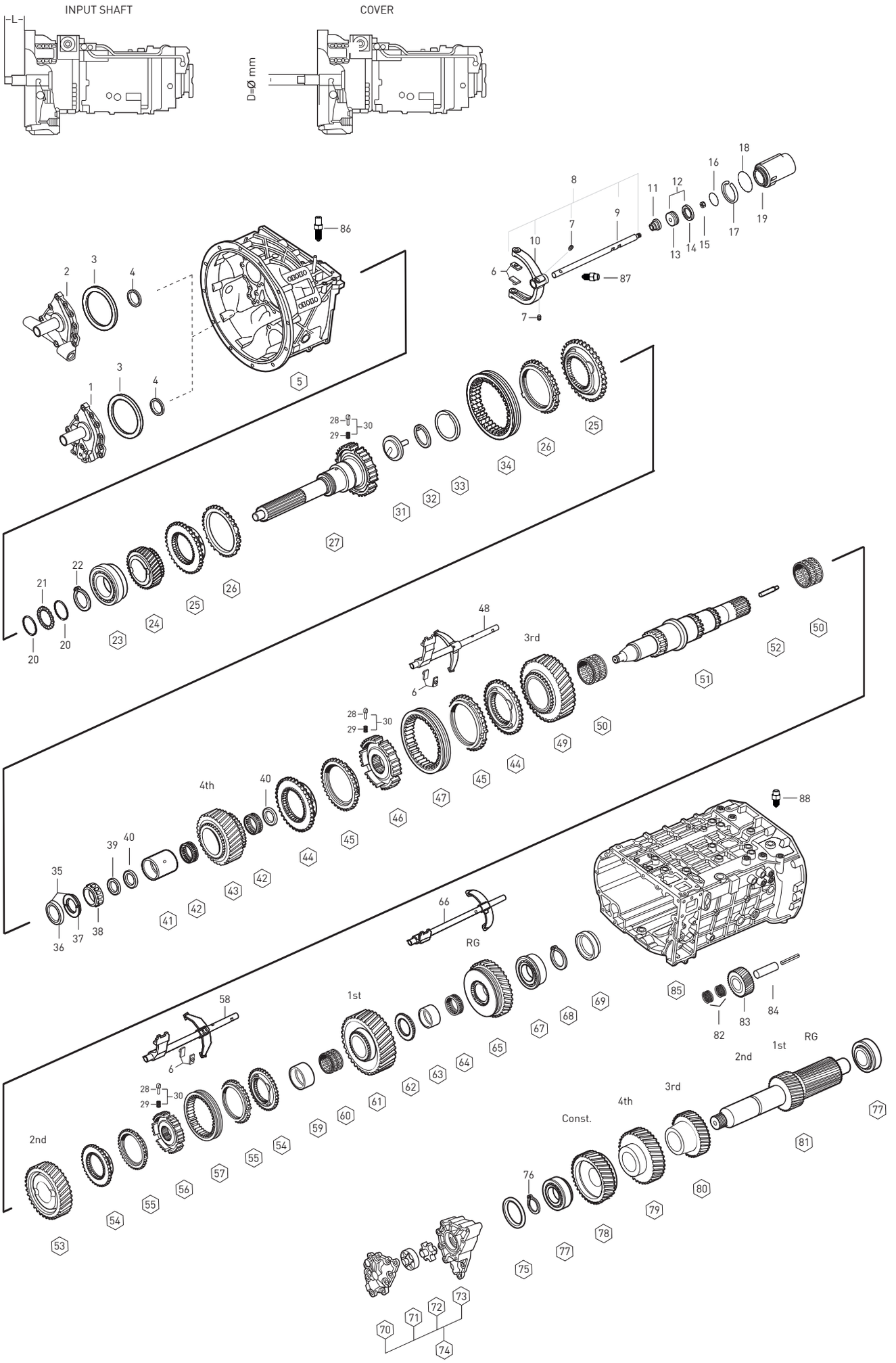

Original parts names, oem numbers, symbols and descriptions used in this catalogue are for reference purposes only.

Fig.	Kacmaz No.	Oem No	Oem Old No	Pcs.	Ürün Tanımı	Description	Sizes	X1):SG-TO 13.80-0.84	X2):DG-TD 16.41-1.00
68		0630 501 333		1	K.MİL ARKA BİLYA SEGMANI	RETAINING RING	80x3.15mm	◆	◆
68		0630 501 312		1	K.MİL ARKA BİLYA SEGMANI	RETAINING RING	80x3.10mm	◆	◆
69	K20.01593	1315 332 073	(1316 332 108)	1	KAMALI MİL ARKA PUL	WASHER		◆	◆
70	K20.00568	1315 302 120	(1315 302 116)	1	ŞANZ.YAĞ POMPA KAPAĞI	PUMP COVER		◆	◆
			(1315 402 120)						
71	K20.00542	1314 202 039		1	YAĞ POMPA İÇ ROTOR	OIL PUMP GEAR		◆	◆
72	K20.00543	1315 303 027		1	YAĞ POMPA DIŞ ROTOR	ROTOR		◆	◆
73	K20.00569	1315 302 121	(1315 302 117)	1	ŞANZ.YAĞ POMPA GÖVDESİ	PUMP HOUSING		◆	◆
			(1315 402 121)						
74	K20.00570	2000570		kit	ŞANZ.YAĞ POMPASI KOMPLE	OIL PUMP ASSY.		◆	◆
75	K20.01674	0730 106 917		1	G.MİLİ ÖN BİLYA RAYNELİ	SHIM	3.00mm	◆	◆
75		0730 106 916		1	G.MİLİ ÖN BİLYA RAYNELİ	SHIM	2.95mm	◆	◆
75	K20.01751	0730 106 915		1	G.MİLİ ÖN BİLYA RAYNELİ	SHIM	2.90mm	◆	◆
75	K20.01750	0730 106 913		1	G.MİLİ ÖN BİLYA RAYNELİ	SHIM	2.80mm	◆	◆
75	K20.01749	0730 106 911		1	G.MİLİ ÖN BİLYA RAYNELİ	SHIM	2.70mm	◆	◆
75	K20.01675	0730 106 909		1	G.MİLİ ÖN BİLYA RAYNELİ	SHIM	2.60mm	◆	◆
75	K20.01748	0730 100 799		1	G.MİLİ ÖN BİLYA RAYNELİ	SHIM	2.50mm	◆	◆
75	K20.01747	0730 100 801		1	G.MİLİ ÖN BİLYA RAYNELİ	SHIM	2.40mm	◆	◆
75	K20.01746	0730 100 803		1	G.MİLİ ÖN BİLYA RAYNELİ	SHIM	2.30mm	◆	◆
75	K20.01676	0730 101 467		1	G.MİLİ ÖN BİLYA RAYNELİ	SHIM	2.20mm	◆	◆
75		0730 101 469		1	G.MİLİ ÖN BİLYA RAYNELİ	SHIM	2.10mm	◆	◆
75	K20.01739	0730 106 906		1	G.MİLİ ÖN BİLYA RAYNELİ	SHIM	1.90mm	◆	◆
75	K20.01752	2001752		1	G.MİLİ ÖN BİLYA RAYNELİ	SHIM	0.50mm	◆	◆
75	K20.01778	2001778		1	G.MİLİ ÖN BİLYA RAYNELİ	SHIM	0.30mm	◆	◆
75	K20.01679	2001679		1	G.MİLİ ÖN BİLYA RAYNELİ	SHIM	0.20mm	◆	◆
75	K20.01680	2001680		1	G.MİLİ ÖN BİLYA RAYNELİ	SHIM	0.10mm	◆	◆
76		0631 531 065		1	G.MİLİ ÖN BİLYA RAYNELİ	RETAINING RING	50x3mm	◆	◆
77	K20.01126	0750 117 009	(0735 372 156)	2	G.MİLİ ÖN VE ARKA BİLYA	ROLLER BEARING	49.20x103.10x43.60mm	◆	◆
78	K20.00165	1315 303 051	(1315 303 064)	1	TAK.DİŞLİ KARŞILIĞI 32 DİŞ	CONST GEAR 32 T		◆	
78	K20.00166	1315 303 008		1	TAK.DİŞLİ KARŞILIĞI 39 DİŞ	CONST GEAR 39 T			◆
79	K20.00168	1315 303 050		1	4.VİT. DİŞLİ KARŞILIĞI 35 DİŞ	GEAR 4th 35 T		◆	◆
80	K20.00171	1315 303 004		1	3.VİT. DİŞLİ KARŞILIĞI 26 DİŞ	GEAR 3rd 26 T		◆	◆
81	K20.00463	1315 303 063		1	GRUP MİLİ 17-20 DİŞ	COUNTER SHAFT 17-20 T		◆	◆
82	K20.01337	0750 115 366		2	K.GERİ VİT. MASURA BİLYA	NEEDLE CAGE	45x57x21mm	◆	◆
83	K20.00970	1315 305 002	(1315 305 011)	1	K.GERİ VİTES DİŞLİSİ 22 DİŞ	REV.IDLER GEAR 22 T		◆	◆
84	K20.00643	1315 201 053		1	KÜÇÜK GERİ VİTES PİMİ	PIN		◆	◆
85		1315 201 178		1	ŞANZIMAN ORTA GÖVDE	HOUSING		◆	◆
85		1315 201 208		1	ŞANZIMAN ORTA GÖVDE	HOUSING		◆	◆
86	K20.00813	1324 207 004	(1315 207 014)	1	İSTİNATLAMA FİŞEĞİ	DETENT PLUNGER	168 N	◆	◆
87	K20.00819	1324 207 033	(1313 207 003)	1	İSTİNATLAMA FİŞEĞİ	DETENT PLUNGER	235 N	◆	◆
88	K20.00838	1324 207 035	(1313 207 005)	1	İSTİNATLAMA FİŞEĞİ	DETENT PLUNGER	145 N	◆	◆
			(1313 207 001)						

NOTES :

X1,X2 are used conjunction with the encoded parts.
Alphabetical Coding has been done according to Input Shaft
X1 : 16 S 151 SG, 16 S 1620 TO, 16 S 1621 TO
16 S 1625 TO, 16 S 1820 TO, 16 S 1821 TO 16 S 1822 TO
16 S 1823 TO, 16 S 1825 TO

X2 : 16 S 151 DG, 16 S 1620 TD, 16 S 1621 TD
16 S 1625 TD, 16 S 1820 TD, 16 S 1821 TD, 16 S 1822 TD
16 S 1823 TD, 16 S 1825 TD

NOTLAR :

X1,X2 ile kodlanan parçalar birlikte kullanılır.
Alfabetik kodlamalar prizdireklere göre yapılmıştır.
X1 : 16 S 151 SG, 16 S 1620 TO, 16 S 1621 TO
16 S 1625 TO, 16 S 1820 TO, 16 S 1821 TO 16 S 1822 TO
16 S 1823 TO, 16 S 1825 TO

X2 : 16 S 151 DG, 16 S 1620 TD, 16 S 1621 TD
16 S 1625 TD, 16 S 1820 TD, 16 S 1821 TD, 16 S 1822 TD
16 S 1823 TD, 16 S 1825 TD

Original parts names, oem numbers, symbols and descriptions used in this catalogue are for reference purposes only.

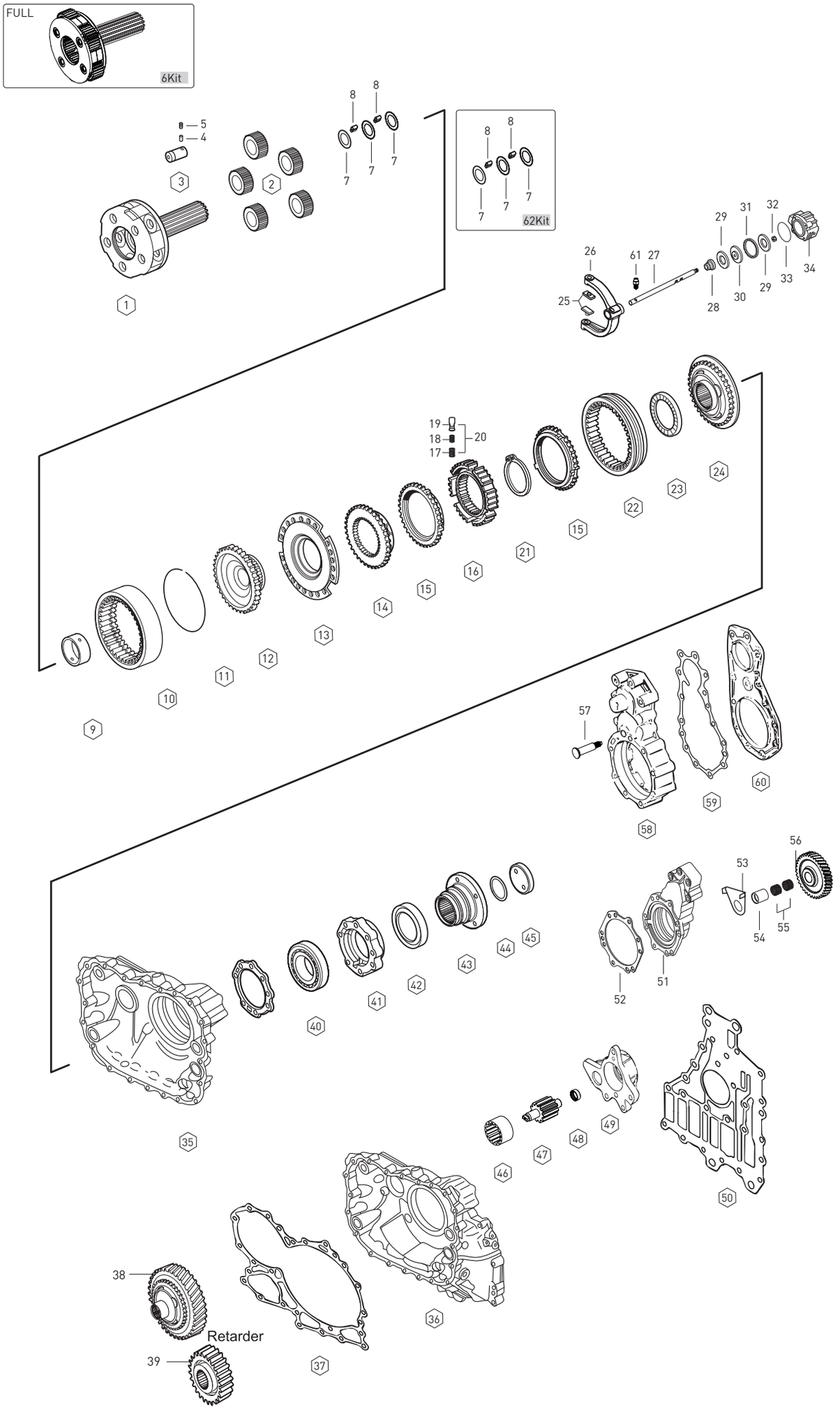

Original parts names, oem numbers, symbols and descriptions used in this catalogue are for reference purposes only.

Fig.	Kacmaz No.	Oem No	Oem Old No	Pcs.	Ürün Tanımı	Description	Sizes	Not	(X1)	(X2)
1	K20.00645	1315 232 017	(1315 232 016)	1	ŞANZIMAN HEYKELİ (BOŞ)	PLANETARY CARRIER		EMPTY	◆	
1	K20.00925	1315 232 027		1	ŞANZIMAN HEYKELİ (BOŞ)	PLANETARY CARRIER	NEW	EMPTY		◆
2	K20.00156	1315 232 010		1	HEYKEL KOZA DİŞLİ TK. 28 DİŞ	PLANET.GEAR SET 28T			◆	◆
3	K20.00400	1315 332 053		5	HEYKEL KOZA DİŞLİ PİMİ	PLANET SHAFT			◆	
3	K20.00924	1315 332 091		5	HEYKEL KOZA DİŞLİ PİMİ	PLANET SHAFT	NEW			◆
4		0631 329 051		5	HEYK.KOZA DİŞ.PİM KİLİT PİMİ	LOCK PIN			◆	
4		0631 329 147		5	HEYK.KOZA DİŞ.PİM KİLİT PİMİ	LOCK PIN	NEW		◆	
5		0631 329 167		5	HEYK.KOZA DİŞ.PİM KİLİT PİMİ	LOCK PIN				◆
5		0631 329 261		5	HEYK.KOZA DİŞ.PİM KİLİT PİMİ	LOCK PIN	NEW			◆
6	K20.01062	1315 232 017		1	ŞANZIMAN HEYKELİ (DOLU)	PLANETARY CARRIER		FULL	◆	
6	K20.01064	1315 232 027		1	ŞANZIMAN HEYKELİ (DOLU)	PLANETARY CARRIER	NEW	FULL		◆
7	K20.01514	0730 107 168		15	HEYKEL KOZA DİŞLİ PULU	THRUST WASHER	1.00mm		◆	◆
8	K20.01454	0750 119 116		140	HEYK.KOZA DİŞLİ TANE BİLYA	NEEDLE ROLLER	10X16.8mm		◆	◆
9	K20.01578	1316 333 014		1	ŞANZIMAN HEYKEL BURCU	BUSHING			◆	◆
10	K20.00646	1315 332 041		1	ÇEMBER DİŞLİ 82 DİŞ	RING WHEEL 82T			◆	◆
11	K20.01690	0730 513 583		1	ÇEMBER DİŞLİ SEGMANI	SPRING RING	3.20mm		◆	◆
12	K20.00647	1316 332 130	(1316 332 103)	1	PLANET ÇAN DİŞLİ	CARRIER HUB	H=91.00mm		◆	◆
13	K20.00220	1296 333 046	(1296 333 039)	1	PLEYT	PLATE			◆	◆
14	K20.00074	1296 333 050		1	AĞIR SERİ SENKROMENÇ	ENGAGING RING			◆	◆
15	K20.00038	1296 333 045	(1296 333 022)	2	AĞIR SERİ SENK.FRENLEME	SYNCHRONIZING CONE			◆	◆
			(0769 174 091)							
16	K20.00185	1313 333 001		1	AĞIR SERİ YILDIZ DİŞLİ	GUIDE SLEEVE			◆	◆
17	K20.00469	0732 040 385		9	AĞIR SERİ YILDIZ DİŞLİ YAYI	SPRING			◆	◆
18	K20.00470	0732 040 386		9	AĞIR SERİ YILDIZ DİŞLİ YAYI	SPRING			◆	◆
19	K20.00471	1240 304 278		9	AĞIR SERİ YILDIZ DİŞLİ FİŞEĞİ	PRESSURE PIECE			◆	◆
20	K20.00474	1295 298 933		kit	A.SERİ YILDIZ DİŞLİ YAY FİŞEK TK.	REPAIR KIT			◆	◆
21		0630 501 061		1	AĞIR SERİ YILDIZ DİŞLİ SEGMANI	RETAINING RING	125x4.00mm		◆	◆
22	K20.00039	1296 333 023	(0769 186 286)	1	AĞIR SERİ SENKROMENÇ HALKA	ENGAGING SLEEVE			◆	
22	K20.00831	1316 333 034		1	AĞIR SERİ SENKROMENÇ HALKA	ENGAGING SLEEVE	NEW			◆
23	K20.01332	0735 298 169		1	SERİ SENK.ALIN MAS.BİLYA	NEEDLE BEARING	104.50X128.40X10mm		◆	◆
24	K20.00158	1316 233 015		1	SERİ SENKROMENÇ	ENGAGING RING			◆	
24	K20.00896	1316 233 029	(1316 233 011)	1	SERİ SENKROMENÇ	ENGAGING RING	NEW			◆
25	K20.00341	1296 334 004		2	AĞIR SERİ HİLAL PABUCU	SLIDING PAD			◆	◆
26		1315 334 039		1	AĞIR SERİ HİLALİ	GEAR SHIFT FORK			◆	◆
27	K20.00648	1315 334 071	(1315 334 058)	1	AĞIR SERİ HİLAL MİLİ	GEAR SHIFT RAIL			◆	◆
28	K20.01026	0750 112 253	(0750 112 131)	1	AĞIR SERİ HİLAL MİL KEÇESİ	FLANGE PACKING	25.0X40.0X15.0mm		◆	◆
29	K20.01019	0734 307 294	(0734 307 280)	2	AĞIR SERİ HAVA KEÇESİ	SEALING RING			◆	◆
30	K20.01773	1315 334 034		1	AĞIR SERİ HİLAL MİL PİSTONU	PISTON			◆	◆
31	K20.01657	0750 112 066		1	AĞIR SERİ HİLAL MİL FİBERİ	GUIDE RING	85.1X90.0X5.4mm		◆	◆
32	K20.01774	0737 006 095		1	AĞIR SERİ HİLAL MİL SOMUNU	NUT	M16X1.5mm		◆	◆
33		0501 317 536		1	A.SERİ SİLİNDİR ORİNGİ	O-RING			◆	◆

NOTES :

X1,X2 are used conjunction with the encoded parts.

X1 : 16 S 151 SG, 16 S 1620 TO, 16 S 1621 TO
16 S 1625 TO, 16 S 1820 TO, 16 S 1821 TO 16 S 1822 TO
16 S 1823 TO, 16 S 1825 TO

X2 : 16 S 151 DG, 16 S 1620 TD, 16 S 1621 TD
16 S 1625 TD, 16 S 1820 TD, 16 S 1821 TD, 16 S 1822 TD
16 S 1823 TD, 16 S 1825 TD

NOTLAR :

X1,X2 ile kodlanan parçalar birlikte kullanılır.

X1 : 16 S 151 SG, 16 S 1620 TO, 16 S 1621 TO
16 S 1625 TO, 16 S 1820 TO, 16 S 1821 TO 16 S 1822 TO
16 S 1823 TO, 16 S 1825 TO

X2 : 16 S 151 DG, 16 S 1620 TD, 16 S 1621 TD
16 S 1625 TD, 16 S 1820 TD, 16 S 1821 TD, 16 S 1822 TD
16 S 1823 TD, 16 S 1825 TD

Original parts names, oem numbers, symbols and descriptions used in this catalogue are for reference purposes only.

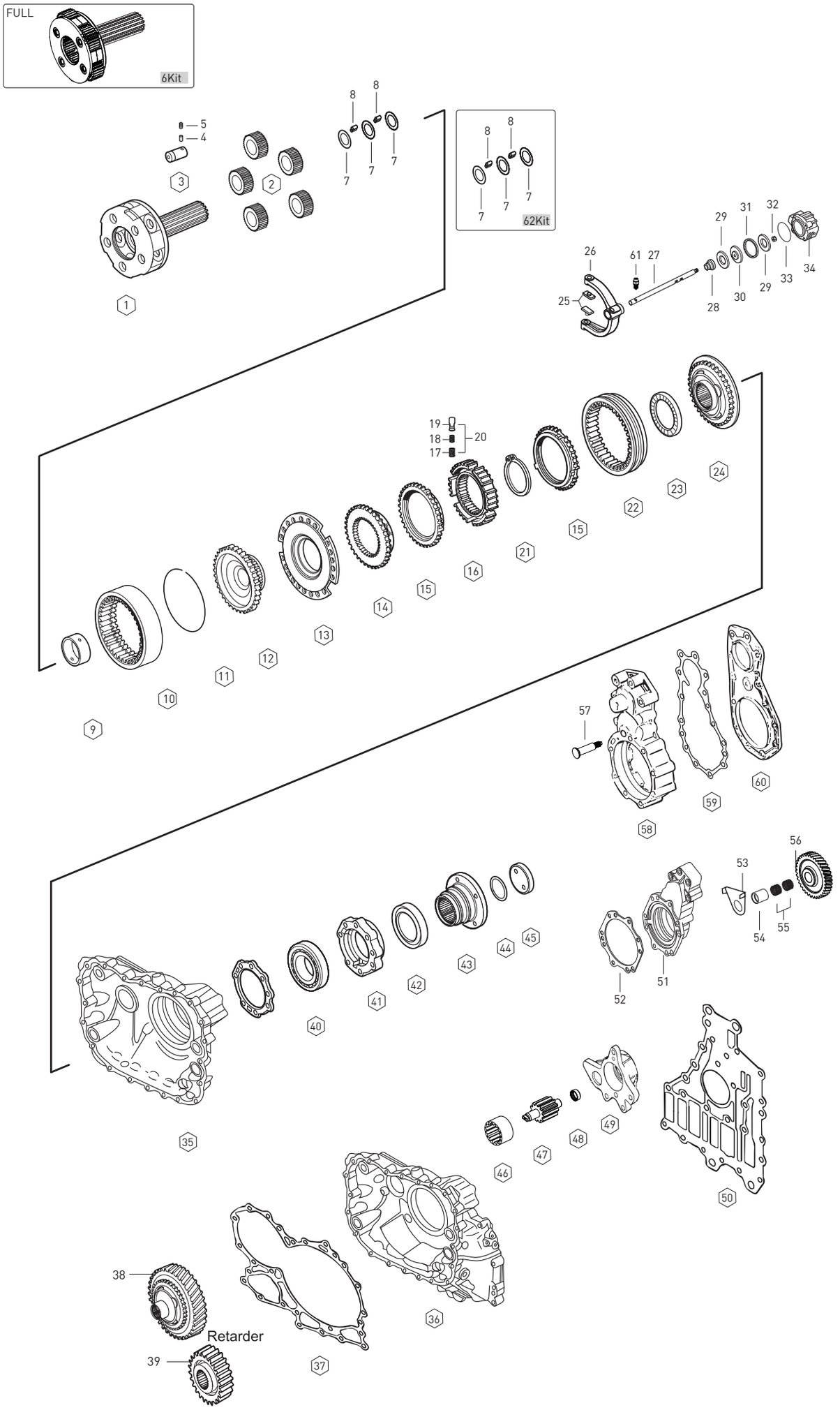

Original parts names, oem numbers, symbols and descriptions used in this catalogue are for reference purposes only.

Fig.	Kacmaz No.	Oem No	Oem Old No	Pcs.	Ürün Tanımı	Description	Sizes	Notes	(X1)	(X2)
34	K20.00842	1315 334 069	(1315 334 056)	1	AĞIR SERİ SİLİNDİR GÖVDESİ	CYLINDER			◆	◆
35		1315 201 224	(1315 301 223)	1	ŞANZIMAN ARKA GÖVDE	HOUSING			◆	◆
36		6085 201 079		1	ŞANZIMAN ARKA GÖVDE	HOUSING	RETARDER		◆	◆
37	K20.01733	0501 315 048	(0501 313 511)	1	ŞANZ.ARKA GÖVDE CONTASI	GASKET	RETARDER		◆	◆
38	K20.00403	1316 233 014		1	RETARDER DİŞLİSİ 59 DİŞ	GEAR 59 T	RETARDER		◆	
38	K20.00796	1316 233 028		1	RETARDER DİŞLİSİ 59 DİŞ	GEAR 59 T	NEW - RETARDER			◆
39	K20.00649	6085 301 012		1	RETARDER DİŞLİ KARŞILIĞI 29 DİŞ	GEAR 29 T	RETARDER		◆	◆
40	K20.01134	0750 116 394	(0750 116 002)	1	ŞANZIMAN ARKA BİLYA	ROLLER BEARING	90x160x30mm		◆	◆
			(0635 304 904)							
41		1315 231 004		1	ŞANZIMAN ARKA KEÇE KAPAĞI	COVER			◆	◆
42	K20.01013	0750 111 341		1	ŞANZIMAN ARKA KEÇE	OIL SEAL	105x130x12mm		◆	◆
42	K20.01022	0734 319 459	(0734 300 421)	1	ŞANZIMAN ARKA KEÇE	OIL SEAL	RETARDER		◆	◆
43	K20.00427	1297 333 110	(1315 333 048)	1	ŞANZIMAN FLANŞI	COMPANION FLANGE			◆	◆
44	K20.02113	0634 313 805		1	ŞANZIMAN FLANŞ ORİNGİ	O-RING	82x4mm		◆	◆
45	K20.01861	1312 332 028		1	ŞANZIMAN FLANŞ PULU	WASHER			◆	◆
46	K20.00804	6085 303 008		1	RETAR.POMPA DİŞLİSİ DIŞ ROTOR	RING GEAR			◆	◆
47	K20.00805	6085 203 001		1	RETAR.POMPA DİŞLİSİ İÇ ROTOR	SHAFT			◆	◆
48	K20.01472	0635 303 038		1	RETAR.POMPA MASURA BİLYA	NEEDLE CAGE			◆	◆
49	K20.00825	6085 303 011	(6085 403 011)	1	RETARDER POMPA GÖVDESİ	HOUSING			◆	◆
50	K20.02058	0501 314 434		1	RETARDER CONTASI	GASKET			◆	◆
51	K20.02080	6091 315 009		1	PTO KAPAĞI	COVER PTO			◆	◆
52		0501 331 906		1	PTO KAPAK CONTASI	GASKET			◆	◆
53	K20.02076	1304 313 058		1	GEZİNTİ PULU SACI	WASHER			◆	◆
54	K20.02170	0735 295 067		1	DİREKSİYON POMPA DİŞLİ BURCU	BUSHING			◆	◆
55	K20.01469	0735 320 885		2	DİREK.POMPA DİŞLİ MAS.BİLYA	NEEDLE CAGE			◆	◆
56		1304 313 063		1	DİREKSİYON POMPA DİŞLİSİ	IDLER GEAR			◆	◆
57	K20.01067	1304 313 057		1	DİREKSİYON POMPA PİMİ	PIN			◆	◆
58	K20.01823	6091 316 004		1	DİREKSİYON POMPA GÖVDESİ	HOUSING			◆	◆
59	K20.02145	1295 338 145		1	DİREK.POMPA GÖVDE CONTASI	GASKET			◆	◆
60	K20.01962	6091 303 018	(1295 338 091)	1	DİREK.POMPA GÖVDE KAPAĞI	COVER			◆	◆
61	K20.00838	1324 207 035	(1313 207 005)	1	İSTİNATLAMA FİŞEĞİ	DETENT PLUNGER	145 N		◆	◆
			(1313 207 001)							
62	K20.01744	2001744		kit	ŞANZ.HEYKELİ BİLYA VE PUL TK.	REPAIR KIT			◆	◆

NOTES :

X1,X2 are used conjunction with the encoded parts.

X1 : 16 S 151 SG, 16 S 1620 TO, 16 S 1621 TO
16 S 1625 TO, 16 S 1820 TO, 16 S 1821 TO 16 S 1822 TO
16 S 1823 TO, 16 S 1825 TO

X2 : 16 S 151 DG, 16 S 1620 TD, 16 S 1621 TD
16 S 1625 TD, 16 S 1820 TD, 16 S 1821 TD, 16 S 1822 TD
16 S 1823 TD, 16 S 1825 TD

NOTLAR :

X1,X2 ile kodlanan parçalar birlikte kullanılır.

X1 : 16 S 151 SG, 16 S 1620 TO, 16 S 1621 TO
16 S 1625 TO, 16 S 1820 TO, 16 S 1821 TO 16 S 1822 TO
16 S 1823 TO, 16 S 1825 TO

X2 : 16 S 151 DG, 16 S 1620 TD, 16 S 1621 TD
16 S 1625 TD, 16 S 1820 TD, 16 S 1821 TD, 16 S 1822 TD
16 S 1823 TD, 16 S 1825 TD

Original parts names, oem numbers, symbols and descriptions used in this catalogue are for reference purposes only.

SYNCHRONIZER KIT CONST.

Fig.	Kacmaz No.	Oem No	Oem Old No	Pcs.	Ürün Tanımı	Description
	K20.00523	1312 204 031		Kit	TAKVİYE SENK.KİT	SYNCH.KIT Const.
1	K20.00101	1312 304 027		1	TAKVİYE SENKROMENÇ	ENGAGING RING
2	K20.00108	1297 304 484	(1297 304 402)	1	TAKVİYE FRENLEME	SYNCHRONIZING CONE

SYNCHRONIZER KIT Const.

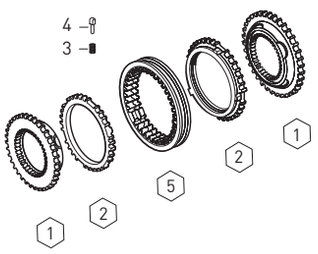

Fig.	Kacmaz No.	Oem No	Oem Old No	Pcs.	Ürün Tanımı	Description
	K20.00524	1315 298 030		Kit	TAKVİYE SENKROMENÇ KİT	SYNCH.KIT Const.
1	K20.00101	1312 304 027		2	TAKVİYE SENKROMENÇ	ENGAGING RING
2	K20.00108	1297 304 484	(1297 304 402)	2	TAKVİYE SENK.FRENLEME	SYNCHRONIZING CONE
3	K20.00111	1297 304 436		3	TAK.YILDIZ DİŞLİ FİŞEĞİ	PRESSURE PIECE
4	K20.00110	0732 040 409		3	TAKVİYE YILDIZ DİŞLİ YAYI	SPRING
5	K20.00098	1310 304 202	(1312 302 057)	1	TAKVİYE SENK.HALKA	ENGAGING SLEEVE

SYNCHRONIZER KIT 3rd/4th

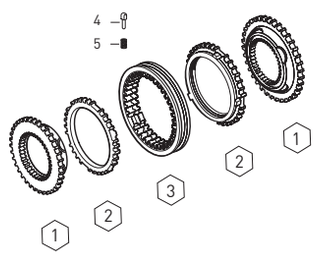

Fig.	Kacmaz No.	Oem No	Oem Old No	Pcs.	Ürün Tanımı	Description
	K20.00894	1315 298 067		Kit	3./4.VİT.SENKROMENÇ KİT	SYNCH.KIT 3rd/4th
1	K20.00102	1316 304 159	(1316 304 145)	2	3./4.VİT.SENKROMENÇ	ENGAGING RING
2	K20.00109	1316 304 168	(1316 304 149)	2	3./4.VİT.SENK.FRENLEME	SYNCH.CONE
3	K20.00103	1316 304 167	(1315 304 135)	1	3./4.VİT.SENK.HALKA	ENGAGING SLEEVE
4	K20.00111	1297 304 436		3	3./4.VİT.YILDIZ DİŞLİ FİŞEĞİ	PRESSURE PIECE
5	K20.00110	0732 040 409		3	3./4.VİT.YILDIZ DİŞLİ YAYI	SPRING

SYNCHRONIZER KIT 3rd/4th

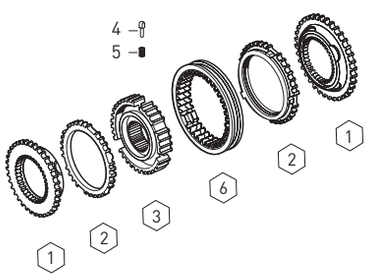

Fig.	Kacmaz No.	Oem No	Oem Old No	Pcs.	Ürün Tanımı	Description
	K20.00088	1315 298 061		Kit	3./4.VİT.SENKROMENÇ KİT	SYNCH.KIT 3rd/4th
1	K20.00102	1316 304 159	(1316 304 145)	2	3./4.VİT.SENKROMENÇ	ENGAGING RING
2	K20.00109	1316 304 168	(1316 304 149)	2	3./4.VİT.SENK.FRENLEME	SYNCHRONIZING CONE
3	K20.00136	1316 304 162		1	3./4.VİT.YILDIZ DİŞLİ	GUIDE SLEEVE
4	K20.00111	1297 304 436		3	3./4.VİT.YILDIZ DİŞLİ FİŞEĞİ	PRESSURE PIECE
5	K20.00110	0732 040 409		3	3./4.VİT.YILDIZ DİŞLİ YAYI	SPRING
6	K20.00103	1316 304 167	(1315 304 135)	1	3./4.VİT.SENK.HALKA	ENGAGING SLEEVE

SYNCHRONIZER KIT 3rd/4th

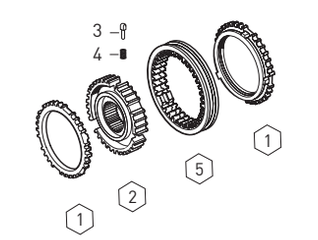

Fig.	Kacmaz No.	Oem No	Oem Old No	Pcs.	Ürün Tanımı	Description
	K20.00794	1316 204 016	(1316 204 014)	Kit	3./4.VİT.FRENLEME KİTİ	SYNCH.KIT 3rd/4th
1	K20.00109	1316 304 168	(1316 304 149)	2	3./4.VİT.SENK.FRENLEME	SYNCHRONIZING CONE
2	K20.00136	1316 304 162		1	3./4.VİT.YILDIZ DİŞLİ	GUIDE SLEEVE
3	K20.00111	1297 304 436		3	3./4.VİT.YILDIZ DİŞLİ FİŞEĞİ	PRESSURE PIECE
4	K20.00110	0732 040 409		3	3./4.VİT.YILDIZ DİŞLİ YAYI	SPRING
5	K20.00103	1316 304 167	(1315 304 135)	1	TAKVİYE SENK.HALKA	ENGAGING SLEEVE

SYNCHRONIZER KIT 3rd/4th

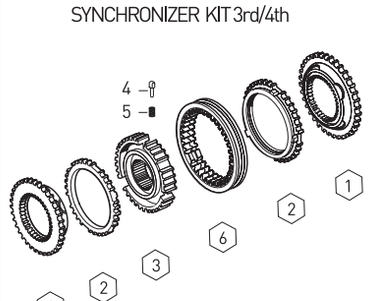

Fig.	Kacmaz No.	Oem No	Oem Old No	Pcs.	Ürün Tanımı	Description
	K20.01794	1356 204 006		Kit	3./4.VİT.FRENLEME KİTİ	SYNCH.KIT 3rd/4th
1	K20.00881	1316 304 190		2	3./4.VİT.SENKROMENÇ	ENGAGING RING
2	K20.00880	1316 304 189		2	3./4.VİT.SENK.FRENLEME	SYNCH.CONE (mlb)
3	K20.00898	1356 304 019		1	3./4.VİT.YILDIZ DİŞLİ	GUIDE SLEEVE
4	K20.00111	1297 304 436		3	3./4.VİT.YILDIZ DİŞLİ FİŞEĞİ	PRESSURE PIECE
5	K20.00110	0732 040 409		3	3./4.VİT.YILDIZ DİŞLİ YAYI	SPRING
6	K20.00871	1356 304 023	(1316 304 188)	1	3./4.VİT.SENK.HALKA	ENGAGING SLEEVE

Original parts names, oem numbers, symbols and descriptions used in this catalogue are for reference purposes only.

Fig.	Kacmaz No.	Oem No	Oem Old No	Pcs.	Ürün Tanımı	Description
	K20.00879	1325 298 008		Kit	3./4.VİT.SENKROMENÇ KİT	SYNCH.KIT 3rd/4th
1	K20.00881	1316 304 190		2	3./4.VİT.SENKROMENÇ	ENGAGING RING
2	K20.00880	1316 304 189		2	3./4.VİT.SENK.FREN. (mlb)	SYNCH.CONE (mlb)
3	K20.00111	1297 304 436		3	3./4.VİT. YILDIZ DİŞLİ FİŞEĞİ	PRESSURE PIECE
4	K20.00110	0732 040 409		3	3./4.VİT. YILDIZ DİŞLİ YAYI	SPRING
5	K20.00871	1356 304 023	(1316 304 188)	1	3./4.VİT.SENK.HALKA	ENGAGING SLEEVE

SYNCHRONIZER KIT 3rd/4th

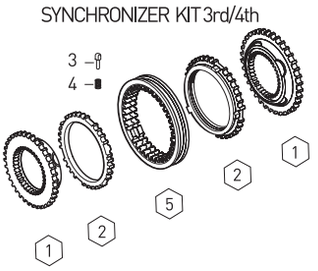

Fig.	Kacmaz No.	Oem No	Oem Old No	Pcs.	Ürün Tanımı	Description
	K20.01793	1356 204 007		Kit	1./2.VİT.SENKROMENÇ KİT	SYNCH.KIT 1st/2nd
1	K20.00183	1316 304 156		2	1./2.VİT.SENKROMENÇ	ENGAGING RING
2	K20.00113	1316 304 170	(1316 304 150)	2	1./2.VİT.FRENLEME (mlb)	SYNCH.CONE (mlb)
3	K20.00889	1356 204 022		1	1./2.VİT.YILDIZ DİŞLİ	GUIDE SLEEVE
4	K20.00111	1297 304 436		3	1./2.VİT.YILDIZ DİŞLİ FİŞEĞİ	PRESSURE PIECE
5	K20.00110	0732 040 409		3	1./2.VİT.YILDIZ DİŞLİ YAYI	SPRING
6	K20.00803	1356 304 024		1	1./2.VİT.SENK.HALKA	ENGAGING SLEEVE

SYNCHRONIZER KIT 1st/2nd

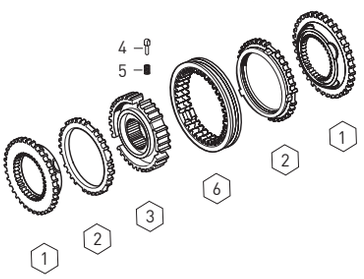

Fig.	Kacmaz No.	Oem No	Oem Old No	Pcs.	Ürün Tanımı	Description
	K20.00087	1315 298 060	(1316 204 017)	Kit	1./2.VİT.SENKROMENÇ KİT	SYNCH.KIT 1st/2nd
1	K20.00183	1316 304 156		2	1./2.VİT.SENKROMENÇ	ENGAGING RING
2	K20.00113	1316 304 170	(1316 304 150)	2	1./2.VİT.FRENLEME	SYNCH.CONE
3	K20.00180	1316 304 163		1	1./2.VİT.YILDIZ DİŞLİ	GUIDE SLEEVE
4	K20.00111	1297 304 436		3	1./2.VİT.YILDIZ DİŞLİ FİŞEĞİ	PRESSURE PIECE
5	K20.00110	0732 040 409		3	1./2.VİT.YILDIZ DİŞLİ YAYI	SPRING
6	K20.00114	1316 304 169	(1315 304 136)	1	1./2.VİT.SENK.HALKA	ENGAGING SLEEVE

SYNCHRONIZER KIT 1st/2nd

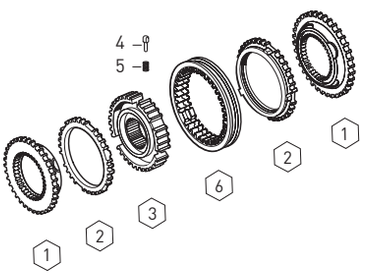

Fig.	Kacmaz No.	Oem No	Oem Old No	Pcs.	Ürün Tanımı	Description
	K20.00893	1315 298 066		Kit	1./2.VİT.SENKROMENÇ KİT	SYNCH.KIT 1st/2nd
1	K20.00183	1316 304 156		2	1./2.VİT.SENKROMENÇ	ENGAGING RING
2	K20.00113	1316 304 170	(1316 304 150)	2	1./2.VİT.FRENLEME	SYNCH.CONE
3	K20.00114	1316 304 169	(1315 304 136)	1	1./2.VİT.SENK.HALKA	ENGAGING SLEEVE
4	K20.00111	1297 304 436		3	1./2.VİT.YILDIZ DİŞLİ FİŞEĞİ	PRESSURE PIECE
5	K20.00110	0732 040 409		3	1./2.VİT.YILDIZ DİŞLİ YAYI	SPRING

SYNCHRONIZER KIT 1st/2nd

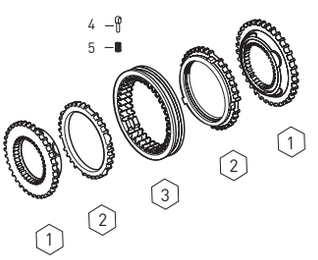

Fig.	Kacmaz No.	Oem No	Oem Old No	Pcs.	Ürün Tanımı	Description
	K20.00906	2000906		Kit	AĞIR SERİ SENK.KİT	SYNCHRONIZER KIT
1	K20.00074	1296 333 050		1	AĞIR SERİ SENKROMENÇ	ENGAGING RING
2	K20.00038	1296 333 045	(1296 333 022)	2	AĞIR SERİ FRENLEME	SYNCHRONIZING CONE
3	K20.00469	0732 040 385		9	AĞIR SERİ YILDIZ DİŞLİ YAYI	SPRING
4	K20.00470	0732 040 386		9	AĞIR SERİ YILDIZ DİŞLİ YAYI	SPRING
5	K20.00471	1240 304 278		9	AĞIR SERİ YILDIZ DİŞ.FİŞEĞİ	PRESSURE PIECE
6	K20.00831	1316 333 034		1	AĞIR SERİ SENK.HALKA	ENGAGING SLEEVE
7	K20.00896	1316 233 011	(1316 233 029)	1	SERİ SENKROMENÇ	ENGAGING RING

SYNCHRONIZER KIT PLANETARY

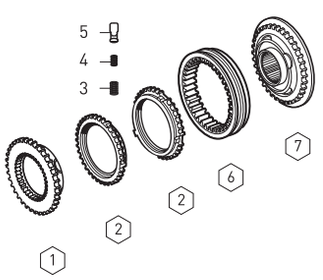

Fig.	Kacmaz No.	Oem No	Oem Old No	Pcs.	Ürün Tanımı	Description
	K20.00907	2000907		Kit	AĞIR SERİ SENK.KİT	SYNCHRONIZER KIT
1	K20.00074	1296 333 050		1	AĞIR SERİ SENKROMENÇ	ENGAGING RING
2	K20.00038	1296 333 045	(1296 333 022)	2	AĞIR SERİ FRENLEME	SYNCHRONIZING CONE
3	K20.00185	1313 333 001		1	AĞIR SERİ YILDIZ DİŞLİ	GUIDE SLEEVE
4	K20.00469	0732 040 385		9	AĞIR SERİ YILDIZ DİŞLİ YAYI	SPRING
5	K20.00470	0732 040 386		9	AĞIR SERİ YILDIZ DİŞLİ YAYI	SPRING
6	K20.00471	1240 304 278		9	AĞIR SERİ YILDIZ DİŞ.FİŞEĞİ	PRESSURE PIECE
7	K20.00831	1316 333 034		1	AĞIR SERİ SENK.HALKA	ENGAGING SLEEVE
8	K20.00896	1316 233 011	(1316 233 029)	1	SERİ SENKROMENÇ	ENGAGING RING

SYNCHRONIZER KIT PLANETARY

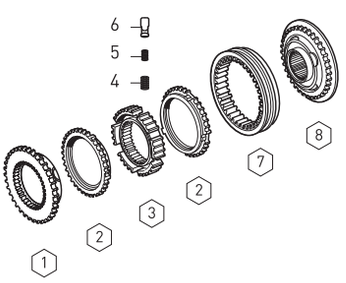

Original parts names, oem numbers, symbols and descriptions used in this catalogue are for reference purposes only.

SYNCHRONIZER KIT PLANETARY

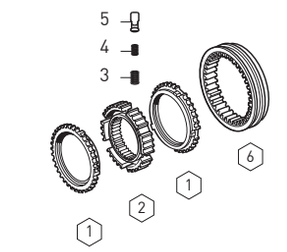

Fig.	Kacmaz No.	Oem No	Oem Old No	Pcs.	Ürün Tanımı	Description
	K20.00532	1315 233 029		Kit	AĞIR SERİ SENK.KİT	SYNCHRONIZER KIT
1	K20.00038	1296 333 045	(1296 333 022)	2	AĞIR SERİ FRENLEME	SYNCHRONIZING CONE
2	K20.00185	1313 333 001		1	AĞIR SERİ YILDIZ DİŞLİ	GUIDE SLEEVE
3	K20.00469	0732 040 385		9	AĞIR SERİ YILDIZ DİŞLİ YAYI	SPRING
4	K20.00470	0732 040 386		9	AĞIR SERİ YILDIZ DİŞLİ YAYI	SPRING
5	K20.00471	1240 304 278		9	AĞIR SERİ YILDIZ DİŞ.FİŞEĞİ	PRESSURE PIECE
6	K20.00039	1296 333 023		1	AĞIR SERİ SENK.HALKA	ENGAGING SLEEVE

SYNCHRONIZER KIT PLANETARY

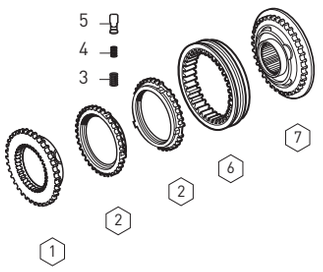

Fig.	Kacmaz No.	Oem No	Oem Old No	Pcs.	Ürün Tanımı	Description
	K20.00546	1315 298 034		Kit	AĞIR SERİ SENK.KİT	SYNCHRONIZER KIT
1	K20.00074	1296 333 050		1	AĞIR SERİ SENKROMENÇ	ENGAGING RING
2	K20.00038	1296 333 045	(1296 333 022)	2	AĞIR SERİ FRENLEME	SYNCHRONIZING CONE
3	K20.00469	0732 040 385		9	AĞIR SERİ YILDIZ DİŞLİ YAYI	SPRING
4	K20.00470	0732 040 386		9	AĞIR SERİ YILDIZ DİŞLİ YAYI	SPRING
5	K20.00471	1240 304 278		9	AĞIR SERİ YILDIZ DİŞ.FİŞEĞİ	PRESSURE PIECE
6	K20.00039	1296 333 023		1	AĞIR SERİ SENK.HALKA	ENGAGING SLEEVE
7	K20.00158	1316 233 015		1	SERİ SENKROMENÇ	ENGAGING RING

SYNCHRONIZER KIT PLANETARY

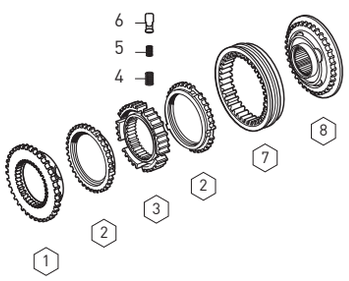

Fig.	Kacmaz No.	Oem No	Oem Old No	Pcs.	Ürün Tanımı	Description
	K20.00545	1315 298 029		Kit	AĞIR SERİ SENK.KİT	SYNCHRONIZER KIT
1	K20.00074	1296 333 050		1	AĞIR SERİ SENKROMENÇ	ENGAGING RING
2	K20.00038	1296 333 045	(1296 333 022)	2	AĞIR SERİ FRENLEME	SYNCHRONIZING CONE
3	K20.00185	1313 333 001		1	AĞIR SERİ YILDIZ DİŞLİ	GUIDE SLEEVE
4	K20.00469	0732 040 385		9	AĞIR SERİ YILDIZ DİŞLİ YAYI	SPRING
5	K20.00470	0732 040 386		9	AĞIR SERİ YILDIZ DİŞLİ YAYI	SPRING
6	K20.00471	1240 304 278		9	AĞIR SERİ YILDIZ DİŞ.FİŞEĞİ	PRESSURE PIECE
7	K20.00039	1296 333 023		1	AĞIR SERİ SENK.HALKA	ENGAGING SLEEVE
8	K20.00158	1316 233 015		1	SERİ SENKROMENÇ	ENGAGING RING

P.T.O. (POWER TAKE OFF)

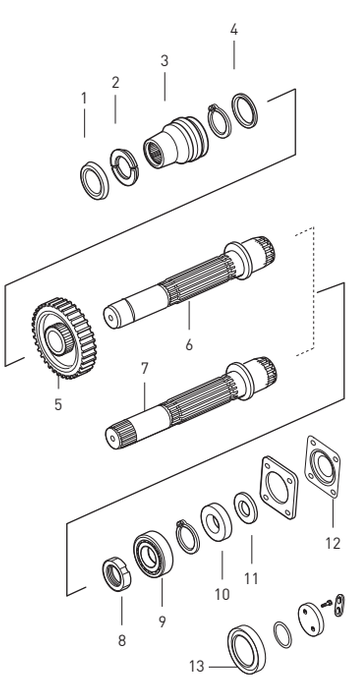

Fig.	Kacmaz No.	Oem No	Oem Old No	Pcs.	Ürün Tanımı	Description
1		1296 313 131		1	P.KİLİT EMNİYET SACI	RETAINING RING
2		0730 104 627		1	PARÇALI KİLİT	SPLIT RING
3		1296 313 238		1	PTO MİL KOVANI	SLIDING SLEEVE
4		0730 104 628		1	PTO DİŞLİ AYAR PULU	THRUST WASHER
5		1296 313 082		1	PTO DİŞLİ	GEAR 33 T
5		1296 313 083		1	PTO DİŞLİ	GEAR 36 T
5		1296 313 084		1	PTO DİŞLİ	GEAR 38 T
5		1296 313 085		1	PTO DİŞLİ	GEAR 39 T
5		1296 313 086		1	PTO DİŞLİ	GEAR 46 T
6	K20.00556	1296 213 028		1	PTO MİLİ DÜZ	INTERM.SHAFT
7	K20.00555	1296 213 028		1	PTO MİLİ FREZELİ	INTERM.SHAFT (Milled)
8		1296 313 125		1	PTO MİL SOMUNU	NUT
9		0735 410 139		1	PTO MİL BİLYASI	ROLLER BEARING
10		7429 032 102		1	PTO BİLYA KAPAK PULU	THRUST WASHER
11		1232 304 062		1	PTO BİLYA KAPAK RAYNELİ	SHIM (1.00mm)
11		1232 304 063		1	PTO BİLYA KAPAK RAYNELİ	SHIM (0.90mm)
11		1232 304 072		1	PTO BİLYA KAPAK RAYNELİ	SHIM (0.70mm)
12		1250 313 190		1	PTO BAĞLANTI KAPAĞI	COVER
13	K20.01013	0750 111 341		1	ŞANZ.ARKA KAPAK KEÇESİ	OIL SEAL

Original parts names, oem numbers, symbols and descriptions used in this catalogue are for reference purposes only.

GEARBOX GASKET KIT

Fig.	Kacmaz No.	Oem No	Oem Old No	Pcs.	Ürün Tanımı	Description
1	K20.01585	1315 298 001		Kit	ŞANZIMAN CONTA TAKIMI	GASKET KIT
2		1315 301 233		1	ŞANZ.ÖN GÖVDE CONTASI	GASKET
3		0501 314 246		1	PRİZ.KEÇE KAPAK CONTASI	GASKET
3		0501 314 587		1	PRİZ.KEÇE KAPAK CONTASI	GASKET
4		1316 301 042		2	ŞANZ.ARKA GÖVDE CONTASI	GASKET
4		1315 301 007		2	ŞANZ.ARKA GÖVDE CONTASI	GASKET
5		0501 318 308		2	ŞANZ.KULE KAPAK CONTASI	GASKET
6		1315 307 012		1	ŞANZ.KULESİ GÖVDE CONTASI	GASKET
7		1315 307 013		1	ŞANZ.KULE ALT KAPAK CONTASI	GASKET
8		0501 317 240		1	ŞANZ.KULE ÜST KAPAK CONTASI	GASKET
9		1315 331 001		1	ŞANZ.BİLYA KAPAK CONTASI	GASKET
10	K20.02108	1238 308 201		1	PTO BAĞLANTI KAPAK CONTASI	GASKET
11		0501 316 146		1	ŞANZ.DAMPER CONTASI	GASKET
11		1315 301 234		1	ŞANZ.DAMPER CONTASI	GASKET
12		1316 301 022		1	ŞANZ.MÜŞÜR KAPAK CONTASI	GASKET
13		1315 303 060		1	YAĞ POMPA CONTASI	GASKET
14		1315 307 242		1	SERVO KULE PİSTON CONTASI	GASKET

GEARBOX GASKET KIT

Fig.	Kacmaz No.	Oem No	Oem Old No	Pcs.	Ürün Tanımı	Description	Sizes
	K20.01039	1315 298 002		Kit	KEÇE TAKIMI	SEAL KIT	
1	K20.01037	0634 300 302	(0734 300 196)	1	KEÇE	OIL SEAL	25X35X7mm
2	K20.01036	0634 307 367		1	KEÇE	OIL SEAL	25X35X7/10mm
3	K20.01008	0734 310 104		1	PRİZDİREK KEÇESİ	OIL SEAL	52X68X8mm
4	K20.01034	0501 312 738	(0501 325 918)	4	KEÇE	OIL SEAL	30X37X4mm
5	K20.01035	0634 300 020		1	KEÇE	OIL SEAL	25X32X5mm
6	K20.01003	0734 310 387	(0734 310 311)	1	PRİZDİREK KEÇESİ	OIL SEAL	55X75X8mm
7	K20.01038	0734 309 765	(0734 309 376)	1	KEÇE	OIL SEAL	28X42X11mm
8	K20.01013	0750 111 341	(0734 319 551)	1	ŞANZ.FLANŞ KEÇESİ	OIL SEAL	105X130X12mm

GEARBOX GASKET KIT

Fig.	Kacmaz No.	Oem No	Oem Old No	Pcs.	Ürün Tanımı	Description	Sizes
	K20.01044	1315 298 003		kit	KEÇE TAKIMI	SEAL KIT	
1	K20.01016	0750 112 034		2	TAK.HİLAL MİL KEÇESİ	OIL SEAL	25X38X14.2mm
2	K20.01026	0750 112 131		2	HİLAL MİL KEÇESİ	OIL SEAL	25X40X15mm
3	K20.01019	0734 307 294	(0734 307 280)	2	A.SERİ HAVA KEÇESİ	OIL SEAL	50X91X7.5mm
4	K20.01024	0734 317 150	(0750 112 019)	2	A.SERİ HAVA KEÇESİ	OIL SEAL	80X90X4.8mm
5	K20.01779	0501 324 670		1	TAK.SİLİNDİR PİSTONU	PISTON	
6	K20.01657	0750 112 066	(0501 307 769)	1	A.SERİ HİLAL MİL FİBERİ	RING	85X90X5.5mm
7	K20.01020	0750 112 177		1	SİLİNDİR HAVA KEÇESİ	OIL SEAL	55X63X9.4mm
8		0634 801 062		12	ALM.PUL	SEAL RING	18X24X1.4mm
9		0634 801 097		1	ALM.PUL	WASHER	30X36mm
10		0634 801 173		5	ALM.PUL	WASHER	22X27mm
11		0634 801 203		1	ALM.PUL	SEAL RING	16X22X1.4mm
12		0634 801 206		5	ALM.PUL	SEAL RING	24X29mm
13		0634 801 219		2	ALM.PUL	SEAL RING	16X22X1.4mm
14		0634 801 249		1	ALM.PUL	SEAL RING	
15		0634 801 321		1	ALM.PUL	WASHER	
16		0730 008 055		1	ALM.PUL	WASHER	
17		0730 008 056		1	ALM.PUL	WASHER	
18		0730 008 057		8	ALM.PUL	WASHER	
19		0734 303 046		1	ORİNG	O-RING	
20		0634 314 020		4	ORİNG	O-RING	
21		0634 313 198		1	ORİNG	O-RING	
22		0634 313 293		1	ORİNG	O-RING	
23		0634 313 320		1	ORİNG	O-RING	
24		0634 313 018		1	ORİNG	O-RING	
25		0634 313 505		1	ORİNG	O-RING	
26		0634 314 015		1	ORİNG	O-RING	
27	K20.02113	0634 313 805		1	ORİNG	O-RING	
28		0634 314 021		2	ORİNG	O-RING	
29		0634 312 523		1	LASTİK KEÇE	RING	
30		0501 317 536		1	KANALLI ORİNG	RING	

Original parts names, oem numbers, symbols and descriptions used in this catalogue are for reference purposes only.

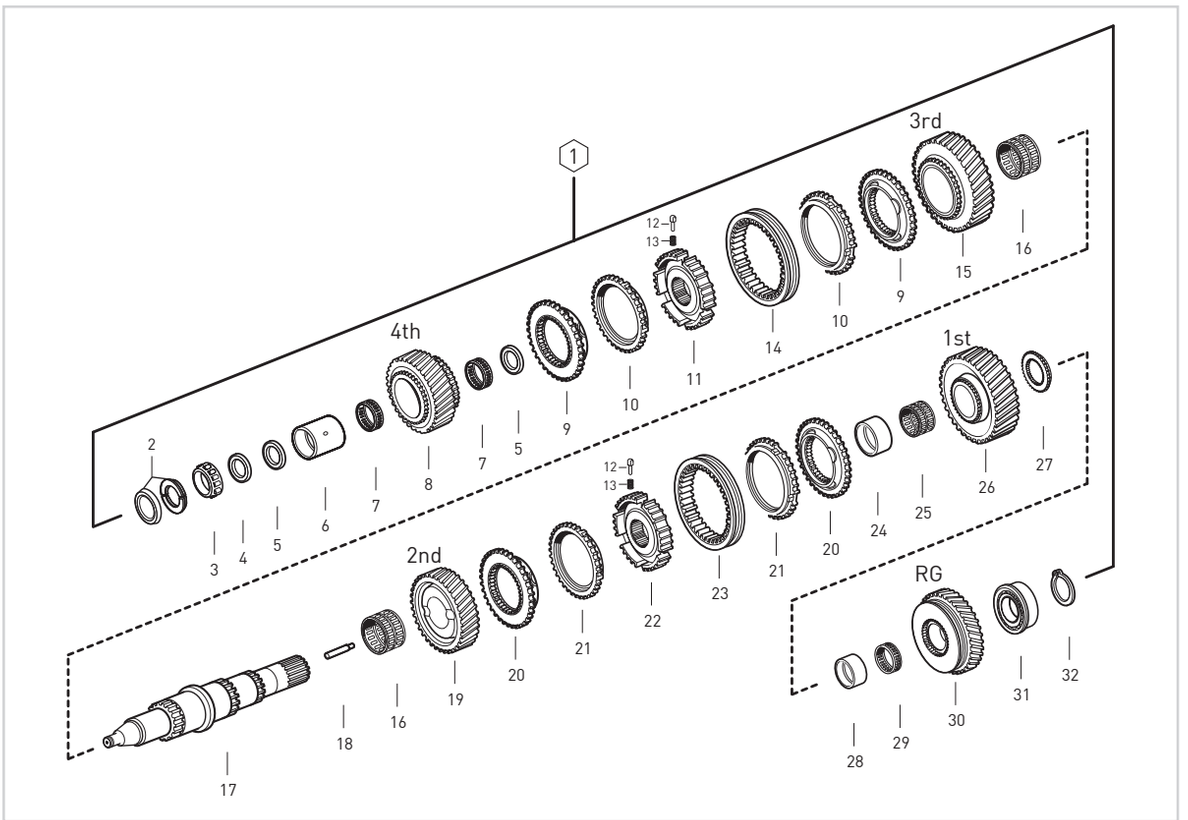

Fig.	Kacmaz No.	Oem No	Oem Old No	Pcs.	Ürün Tanımı	Description	Sizes
1	K20.01887	2001887		kit	KAMALI MİL KOMPLE	MAIN SHAFT COMPLETE	
2	K20.01565	1499 298 025		1	EMN.SACI ve KİLİT TAK.	SPLIT RING KIT	4.80mm
3	K20.01109	0750 117 232	(0735 371 563)	1	KAMALI MİL UÇ BİLYA	ROLLER BEARING	
4	K20.01527	1315 304 048		1	KAMALI MİL UÇ BİLYA PULU	THRUST WASHER	8.00mm
5	K20.01533	0750 101 158		2	4.VİT.ÇANAK ALIN PULU	THRUST WASHER	
6	K20.00174	0750 119 125		1	4.VİT.MASURA BİLYA ÇANAĞI	BEARING RACE	
7	K20.01303	0750 115 531	(0750 115 534)	2	4.VİT.DİŞLİ MASURA BİLYA	NEEDLE CAGE	77X101X29mm
8	K20.00173	1315 304 089		1	4.VİTES DİŞLİSİ 32 DİŞ	GEAR 4th 32 T	
9	K20.00881	1316 304 190		2	3./4.VİTES SENKROMENÇ	ENGAGING RING	
10	K20.00880	1316 304 189		2	3./ 4.VİT.SENK.FRENLEME	SYNCHRONIZING CONE	
11	K20.00898	1356 304 019		1	3./4.VİTES YILDIZ DİŞLİ	GUIDE SLEEVE	
12	K20.00111	1297 304 436		6	YILDIZ DİŞLİ FİŞEĞİ	PRESSURE PIECE	
13	K20.00110	0732 040 409		6	YILDIZ DİŞLİ YAYI	SPRING	
14	K20.00871	1356 304 023	(1316 304 188)	1	3./4.VİT.SENK.HALKA	ENGAGING SLEEVE	
15	K20.00176	1315 304 027		1	3.VİTES DİŞLİSİ 34 DİŞ	GEAR 3rd 34 T	
16	K20.01322	0735 321 087	(0750 115 584)	2	2./3.VİTES MASURA BİLYA	NEEDLE CAGE	
17	K20.00299	1315 304 131	(1315 304 084)	1	KAMALI MİL	MAIN SHAFT	
18	K20.01506	1324 304 014	(1312 304 150)	1	KAMALI MİL YAĞ BORUSU	OIL PIPE	
19	K20.00178	1315 304 025		1	2.VİTES DİŞLİSİ 38 DİŞ	GEAR 2nd 38 T	
20	K20.00183	1316 304 156		2	1./2.VİTES SENKROMENÇ	ENGAGING RING	
21	K20.00113	1316 304 170	(1316 304 150)	2	1./2.VİTES SENK.FRENLEME	SYCNHRONIZING CONE	
22	K20.00889	1356 304 022		1	1./2.VİTES YILDIZ DİŞLİ	GUIDE SLEEVE	
23	K20.00803	1356 304 024		1	1./2.VİTES SENK.HALKA	ENGAGING SLEEVE	
24	K20.00374	1313 304 038		1	1.VİT.MASURA BİLYA ÇANAĞI	BEARING RACE	
25	K20.01323	0750 115 325		1	1.VİTES MSURA BİLYA	NEEDLE CAGE	96X104X55mm
26	K20.00391	1315 304 004		1	1.VİTES DİŞLİSİ 47 DİŞ	GEAR 1st 47 T	
27	K20.00393	1315 304 018		1	GERİ VİTES YILDIZ DİŞLİ	HUB	
28	K20.00378	1315 304 132		1	GERİ VİT.MASURA BİLYA ÇANAĞI	BEARING RACE	
29	K20.01324	0750 115 324		1	GERİ VİTES MASURA BİLYA	NEEDLE CAGE	90X98X41mm
30	K20.00395	1315 304 006	(1315 304 380)	1	GERİ VİTES DİŞLİSİ 44 DİŞ	REVERSE GEAR 44 T	
31	K20.01119	0750 117 677		1	KAMALI MİL ARKA BİLYA	ROLLER BEARING	80X130X36mm
32	K20.02146	0630 501 316		1	KAMALI MİL ARKA BİLYA SEGMANI	RETAINING RING	3.50 mm

Original parts names, oem numbers, symbols and descriptions used in this catalogue are for reference purposes only.

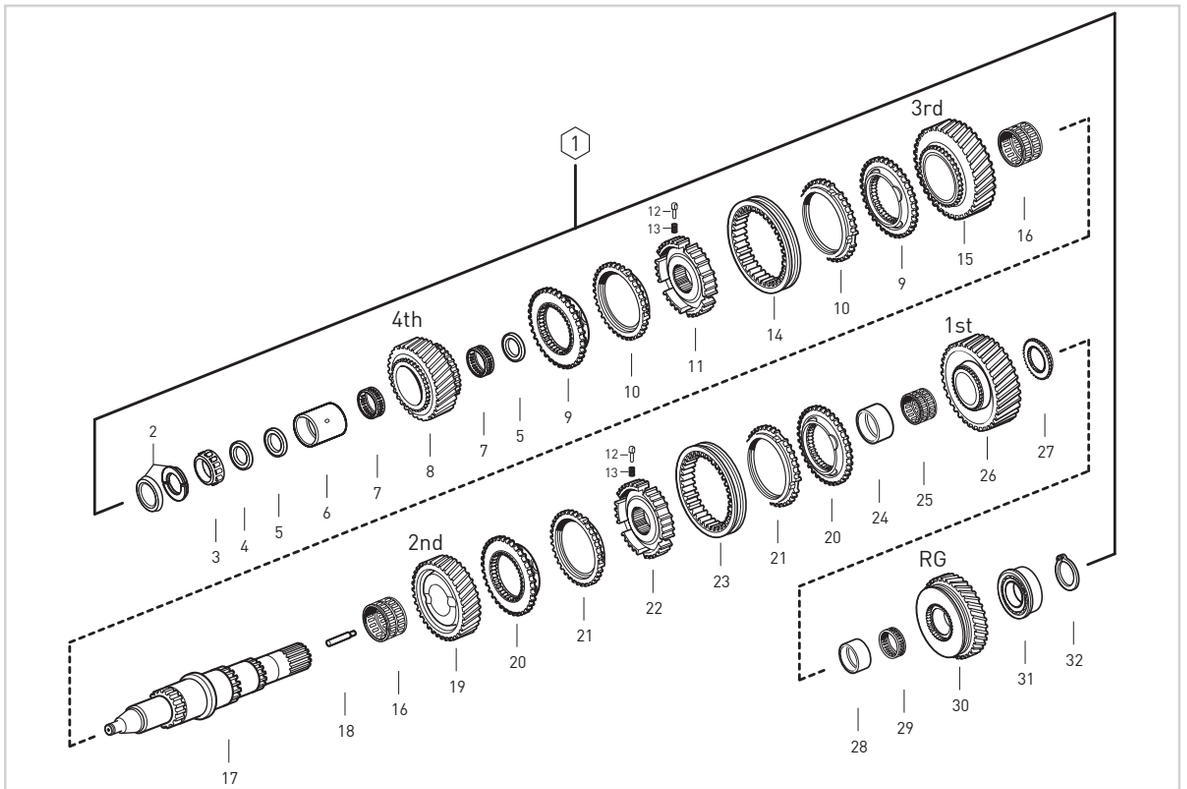

Fig.	Kacmaz No.	Oem No	Oem Old No	Pcs.	Ürün Tanımı	Description	Sizes
1	K20.00853	1315 104 026		kit	KAMALI MİL KOMPLE	MAIN SHAFT COMPLETE	
2	K20.01565	1499 298 025		1	EMN.SACI ve KİLİT TAK.	SPLIT RING KIT	4.80mm
3	K20.01109	0750 117 232	(0735 371 563)	1	KAMALI MİL UÇ BİLYA	ROLLER BEARING	
4	K20.01527	1315 304 048		1	KAMALI MİL UÇ BİLYA PULU	THRUST WASHER	8.00mm
5	K20.01533	0750 101 158		2	4.VİT.ÇANAK ALIN PULU	THRUST WASHER	
6	K20.00174	0750 119 125		1	4.VİT.MASURA BİLYA ÇANAĞI	BEARING RACE	
7	K20.01303	0750 115 531	(0750 115 534)	2	4.VİT.DİŞLİ MASURA BİLYA	NEEDLE CAGE	77X101X29mm
8	K20.00173	1315 304 089		1	4.VİTES DİŞLİSİ 32 DİŞ	GEAR 4th. 32 T	
9	K20.00102	1316 304 159	(1316 304 145)	2	3./4.VİTES SENKROMENÇ	ENGAGING RING	
10	K20.00109	1316 304 168	(1316 304 149)	2	3./ 4.VİT.SENK.FRENLEME	SYNCHRONIZING CONE	
11	K20.00136	1316 304 162	(1316 304 147)	1	3./4.VİTES YILDIZ DİŞLİ	GUIDE SLEEVE	
12	K20.00111	1297 304 436		6	YILDIZ DİŞLİ FİŞEĞİ	PRESSURE PIECE	
13	K20.00110	0732 040 409		6	YILDIZ DİŞLİ YAYI	SPRING	
14	K20.00103	1316 304 167	(0769 186 281)	1	3./4.VİT.SENK.HALKA	ENGAGING SLEEVE	
			(1297 304 515)				
			(1315 304 135)				
15	K20.00176	1315 304 027		1	3.VİTES DİŞLİSİ 34 DİŞ	GEAR 3rd. 34 T	
16	K20.01322	0735 321 087	(0750 115 584)	2	2./3.VİTES MASURA BİLYA	NEEDLE CAGE	
17	K20.00299	1315 304 131	(1315 304 084)	1	KAMALI MİL	MAIN SHAFT	
18	K20.01506	1324 304 014	(1312 304 150)	1	KAMALI MİL YAĞ BORUSU	OIL PIPE	
19	K20.00178	1315 304 025		1	2.VİTES DİŞLİSİ 38 DİŞ	GEAR 2nd 38 T	
20	K20.00183	1316 304 156		2	1./2.VİTES SENKROMENÇ	ENGAGING RING	
21	K20.00113	1316 304 170	(1316 304 150)	2	1./2.VİTES SENK.FRENLEME	SYCNHRONIZING CONE	
22	K20.00180	1316 304 163	(1316 304 148)	1	1./2.VİTES YILDIZ DİŞLİ	GUIDE SLEEVE	
23	K20.00114	1316 304 169	(1315 304 136)	1	1./2.VİTES SENK.HALKA	ENGAGING SLEEVE	
24	K20.00374	1313 304 038		1	1.VİT.MASURA BİLYA ÇANAĞI	BEARING RACE	
25	K20.01323	0750 115 325		1	1.VİTES MSURA BİLYA	NEEDLE CAGE	96X104X55mm
26	K20.00391	1315 304 004		1	1.VİTES DİŞLİSİ 47 DİŞ	GEAR 1st. 47 T	
27	K20.00393	1315 304 018		1	GERİ VİTES YILDIZ DİŞLİ	HUB	
28	K20.00378	1315 304 132		1	GERİ VİT.MASURA BİLYA ÇANAĞI	BEARING RACE	
29	K20.01324	0750 115 324		1	GERİ VİTES MASURA BİLYA	NEEDLE CAGE	90X98X41mm
30	K20.00395	1315 304 006	(1315 304 380)	1	GERİ VİTES DİŞLİSİ 44 DİŞ	REVERSE GEAR 44 T	
31	K20.01119	0750 117 677		1	KAMALI MİL ARKA BİLYA	ROLLER BEARING	80X130X36mm
32	K20.02146	0630 501 316		1	KAMALI MİL ARKA BİLYA SEGMANI	RETAINING RING	3.50 mm

Original parts names, oem numbers, symbols and descriptions used in this catalogue are for reference purposes only.

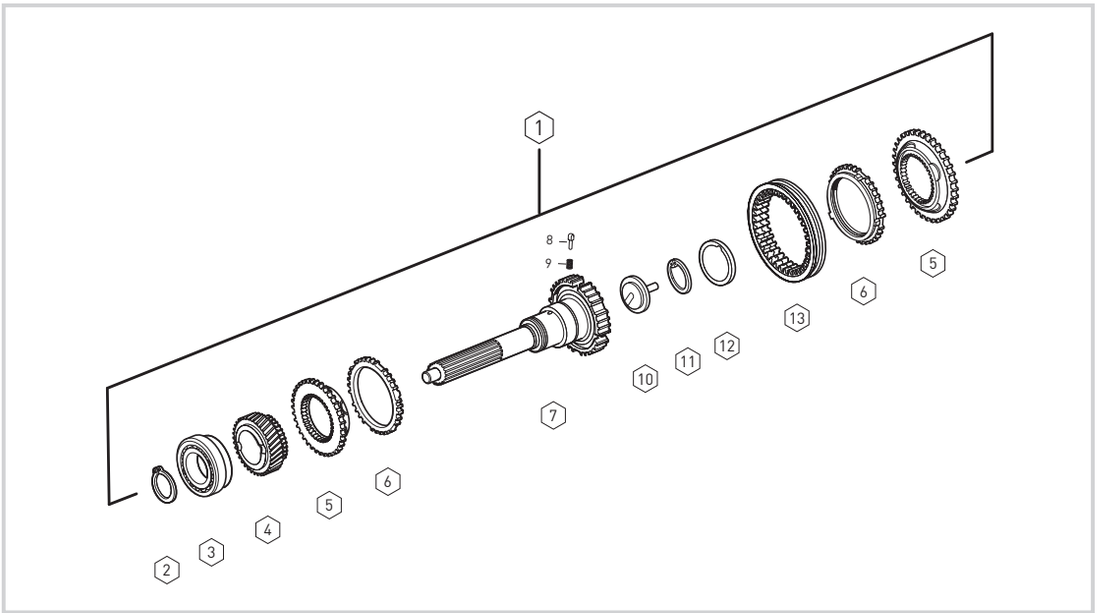

DG-TD

Fig.	Kacmaz No.	Oem No	Oem Old No	Pcs.	Ürün Tanımı	Description	Sizes
1	K20.00848	1315 102 036		Kit	PRİZDİREK KOMPLE	INPUT SHAFT COMPLETE	
2	K20.01897	0730 501 598		1	PRİZDİREK ÖN BİLYA SEGMANI	RETAINING RING	4.00 mm
3	K20.01104	0750 117 732		1	PRİZDİREK ÖN BİLYA	ROLLER BEARING	
4	K20.00163	1315 302 157		1	TAKVİYE DİŞLİSİ 30 DİŞ	CONSTANT GEAR 30 T	
5	K20.00101	1312 304 027		2	TAKVİYE KİLİT SENKROMENÇ	ENGAGING RING	
6	K20.00108	1297 304 484	(1297 304 402)	2	TAKVİYE FRENLEME	SYNCHRONIZING CONE	
7	K20.00151	1315 202 037	(1315 302 153)	1	PRİZDİREK	INPUT SHAFT	
			(1355 302 002)				
8	K20.00111	1297 304 436		3	PRİZDİREK FİŞEĞİ	PRESSURE PIECE	
9	K20.00110	0732 040 409		3	PRİZDİREK FİŞEK YAYI	SPRING	
10	K20.01504	1315 302 196		1	PRİZDİREK YAĞ PİPETİ	OIL PIPET	
11	K20.01505	0630 502 027		1	PRİZDİREK SEGMANI	RETAINING RING	
12	K20.01011	0501 314 060	(0750 101 179)	1	PRİZDİREK ARKA KEÇE	OIL SEAL	
13	K20.00098	1310 304 202	(1310 304 174)	1	TAKVİYE SENK.HALKA	ENGAGING SLEEVE	
			(1312 304 057)				

SG-TO

Fig.	Kacmaz No.	Oem No	Oem Old No	Pcs.	Ürün Tanımı	Description	Sizes
1	K20.00849	1315 102 055		Kit	PRİZDİREK KOMPLE	INPUT SHAFT COMPLETE	
2	K20.01897	0730 501 598		1	PRİZDİREK ÖN BİLYA SEGMANI	RETAINING RING	4.00 mm
3	K20.01104	0750 117 732		1	PRİZDİREK ÖN BİLYA	ROLLER BEARING	
4	K20.00162	1315 302 158		1	TAKVİYE DİŞLİSİ 35 DİŞ	CONSTANT GEAR 35 T	
5	K20.00101	1312 304 027		2	TAKVİYE KİLİT SENKROMENÇ	ENGAGING RING	
6	K20.00108	1297 304 484	(1297 304 402)	2	TAKVİYE FRENLEME	SYNCHRONIZING CONE	
7	K20.00151	1315 202 037	(1315 302 153)	1	PRİZDİREK	INPUT SHAFT	
			(1355 302 002)				
8	K20.00111	1297 304 436		3	PRİZDİREK FİŞEĞİ	PRESSURE PIECE	
9	K20.00110	0732 040 409		3	PRİZDİREK FİŞEK YAYI	SPRING	
10	K20.01504	1315 302 196		1	PRİZDİREK YAĞ PİPETİ	OIL PIPET	
11	K20.01505	0630 502 027		1	PRİZDİREK SEGMANI	RETAINING RING	
12	K20.01011	0501 314 060	(0750 101 179)	1	PRİZDİREK ARKA KEÇE	OIL SEAL	
13	K20.00098	1310 304 202	(1310 304 174)	1	TAKVİYE SENK.HALKA	ENGAGING SLEEVE	
			(1312 304 057)				

Original parts names, oem numbers, symbols and descriptions used in this catalogue are for reference purposes only.

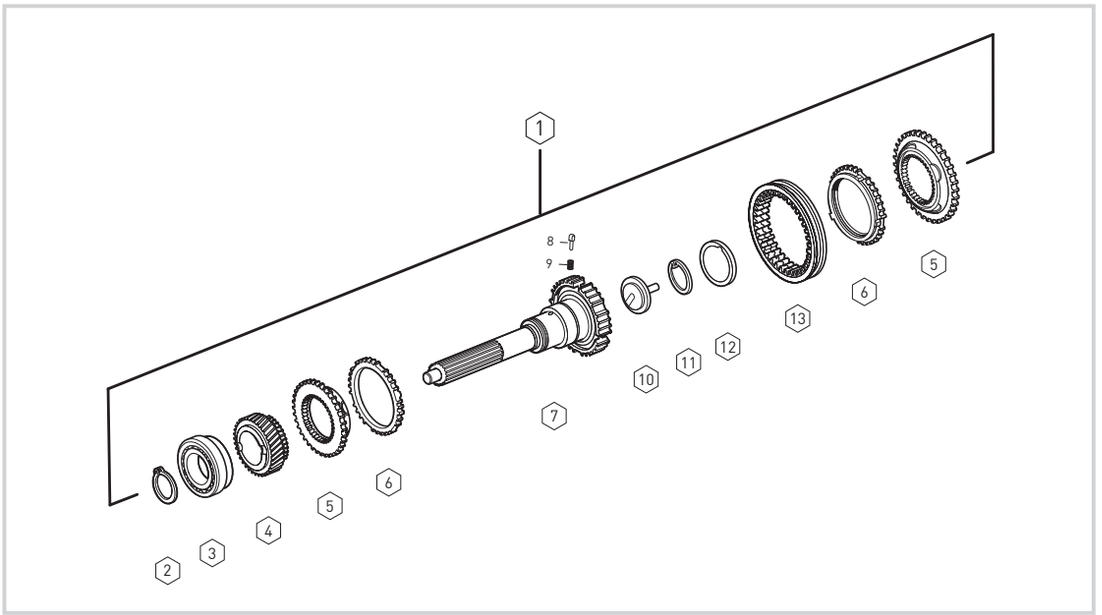

DG-TD

Fig.	Kacmaz No.	Oem No	Oem Old No	Pcs.	Ürün Tanımı	Description	Sizes
1	K20.01888	1315 102 073		Kit	PRİZDİREK KOMPLE	INPUT SHAFT COMPLETE	
2	K20.01897	0730 501 598		1	PRİZDİREK ÖN BİLYA SEGMANI	RETAINING RING	4.00 mm
3	K20.01104	0750 117 732		1	PRİZDİREK ÖN BİLYA	ROLLER BEARING	
4	K20.00163	1315 302 157		1	TAKVİYE DİŞLİSİ 30 DİŞ	CONSTANT GEAR 30 T	
5	K20.00101	1312 304 027		2	TAKVİYE KİLİT SENKROMENÇ	ENGAGING RING	
6	K20.00108	1297 304 484	(1297 304 402)	2	TAKVİYE FRENLEME	SYNCHRONIZING CONE	
7	K20.00640	1315 202 038	(1315 302 164)	1	PRİZDİREK	INPUT SHAFT	
8	K20.00111	1297 304 436		3	PRİZDİREK FİŞEĞİ	PRESSURE PIECE	
9	K20.00110	0732 040 409		3	PRİZDİREK FİŞEK YAYI	SPRING	
10	K20.01504	1315 302 196		1	PRİZDİREK YAĞ PİPETİ	OIL PIPET	
11	K20.01505	0630 502 027		1	PRİZDİREK SEGMANI	RETAINING RING	
12	K20.01011	0501 314 060	(0750 101 179)	1	PRİZDİREK ARKA KEÇE	OIL SEAL	
13	K20.00098	1310 304 202	(1310 304 174)	1	TAKVİYE SENK.HALKA	ENGAGING SLEEVE	
			(1312 304 057)				

SG-TO

Fig.	Kacmaz No.	Oem No	Oem Old No	Pcs.	Ürün Tanımı	Description	Sizes
1	K20.01889	1315 102 072		Kit	PRİZDİREK KOMPLE	INPUT SHAFT COMPLETE	
2	K20.01897	0730 501 598		1	PRİZDİREK ÖN BİLYA SEGMANI	RETAINING RING	4.00 mm
3	K20.01104	0750 117 732		1	PRİZDİREK ÖN BİLYA	ROLLER BEARING	
4	K20.00162	1315 302 158		1	TAKVİYE DİŞLİSİ 35 DİŞ	CONSTANT GEAR 35 T	
5	K20.00101	1312 304 027		2	TAKVİYE KİLİT SENKROMENÇ	ENGAGING RING	
6	K20.00108	1297 304 484	(1297 304 402)	2	TAKVİYE FRENLEME	SYNCHRONIZING CONE	
7	K20.00640	1315 202 038	(1315 302 164)	1	PRİZDİREK	INPUT SHAFT	
8	K20.00111	1297 304 436		3	PRİZDİREK FİŞEĞİ	PRESSURE PIECE	
9	K20.00110	0732 040 409		3	PRİZDİREK FİŞEK YAYI	SPRING	
10	K20.01504	1315 302 196		1	PRİZDİREK YAĞ PİPETİ	OIL PIPET	
11	K20.01505	0630 502 027		1	PRİZDİREK SEGMANI	RETAINING RING	
12	K20.01011	0501 314 060	(0750 101 179)	1	PRİZDİREK ARKA KEÇE	OIL SEAL	
13	K20.00098	1310 304 202	(1310 304 174)	1	TAKVİYE SENK.HALKA	ENGAGING SLEEVE	
			(1312 304 057)				

Original parts names, oem numbers, symbols and descriptions used in this catalogue are for reference purposes only.

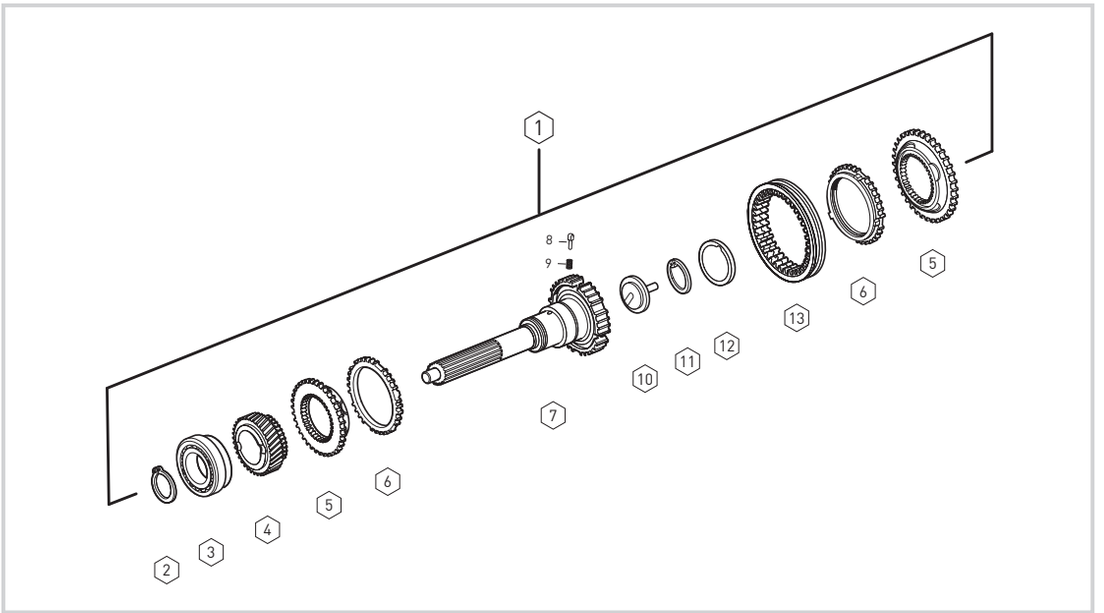

DG-TD

Fig.	Kacmaz No.	Oem No	Oem Old No	Pcs.	Ürün Tanımı	Description	Sizes
1	K20.00850	1315 102 040		Kit	PRİZDİREK KOMPLE	INPUT SHAFT COMPLETE	
2	K20.01897	0730 501 598		1	PRİZDİREK ÖN BİLYA SEGMANI	RETAINING RING	4.00 mm
3	K20.01104	0750 117 732		1	PRİZDİREK ÖN BİLYA	ROLLER BEARING	
4	K20.00163	1315 302 157		1	TAKVİYE DİŞLİSİ 30 DİŞ	CONSTANT GEAR 30 T	
5	K20.00101	1312 304 027		2	TAKVİYE KİLİT SENKROMENÇ	ENGAGING RING	
6	K20.00108	1297 304 484	(1297 304 402)	2	TAKVİYE FRENLEME	SYNCHRONIZING CONE	
7	K20.00152	1315 202 040	(1315 302 162)	1	PRİZDİREK	INPUT SHAFT	
8	K20.00111	1297 304 436		3	PRİZDİREK FİŞEĞİ	PRESSURE PIECE	
9	K20.00110	0732 040 409		3	PRİZDİREK FİŞEK YAYI	SPRING	
10	K20.01504	1315 302 196		1	PRİZDİREK YAĞ PİPETİ	OIL PIPET	
11	K20.01505	0630 502 027		1	PRİZDİREK SEGMANI	RETAINING RING	
12	K20.01011	0501 314 060	(0750 101 179)	1	PRİZDİREK ARKA KEÇE	OIL SEAL	
13	K20.00098	1310 304 202	(1310 304 174)	1	TAKVİYE SENK.HALKA	ENGAGING SLEEVE	
			(1312 304 057)				

SG-TO

Fig.	Kacmaz No.	Oem No	Oem Old No	Pcs.	Ürün Tanımı	Description	Sizes
1	K20.00846	1315 102 056		Kit	PRİZDİREK KOMPLE	INPUT SHAFT COMPLETE	
2	K20.01897	0730 501 598		1	PRİZDİREK ÖN BİLYA SEGMANI	RETAINING RING	4.00 mm
3	K20.01104	0750 117 732		1	PRİZDİREK ÖN BİLYA	ROLLER BEARING	
4	K20.00162	1315 302 158		1	TAKVİYE DİŞLİSİ 35 DİŞ	CONSTANT GEAR 35 T	
5	K20.00101	1312 304 027		2	TAKVİYE KİLİT SENKROMENÇ	ENGAGING RING	
6	K20.00108	1297 304 484	(1297 304 402)	2	TAKVİYE FRENLEME	SYNCHRONIZING CONE	
7	K20.00152	1315 202 040	(1315 302 162)	1	PRİZDİREK	INPUT SHAFT	
8	K20.00111	1297 304 436		3	PRİZDİREK FİŞEĞİ	PRESSURE PIECE	
9	K20.00110	0732 040 409		3	PRİZDİREK FİŞEK YAYI	SPRING	
10	K20.01504	1315 302 196		1	PRİZDİREK YAĞ PİPETİ	OIL PIPET	
11	K20.01505	0630 502 027		1	PRİZDİREK SEGMANI	RETAINING RING	
12	K20.01011	0501 314 060	(0750 101 179)	1	PRİZDİREK ARKA KEÇE	OIL SEAL	
13	K20.00098	1310 304 202	(1310 304 174)	1	TAKVİYE SENK.HALKA	ENGAGING SLEEVE	
			(1312 304 057)				

Original parts names, oem numbers, symbols and descriptions used in this catalogue are for reference purposes only.

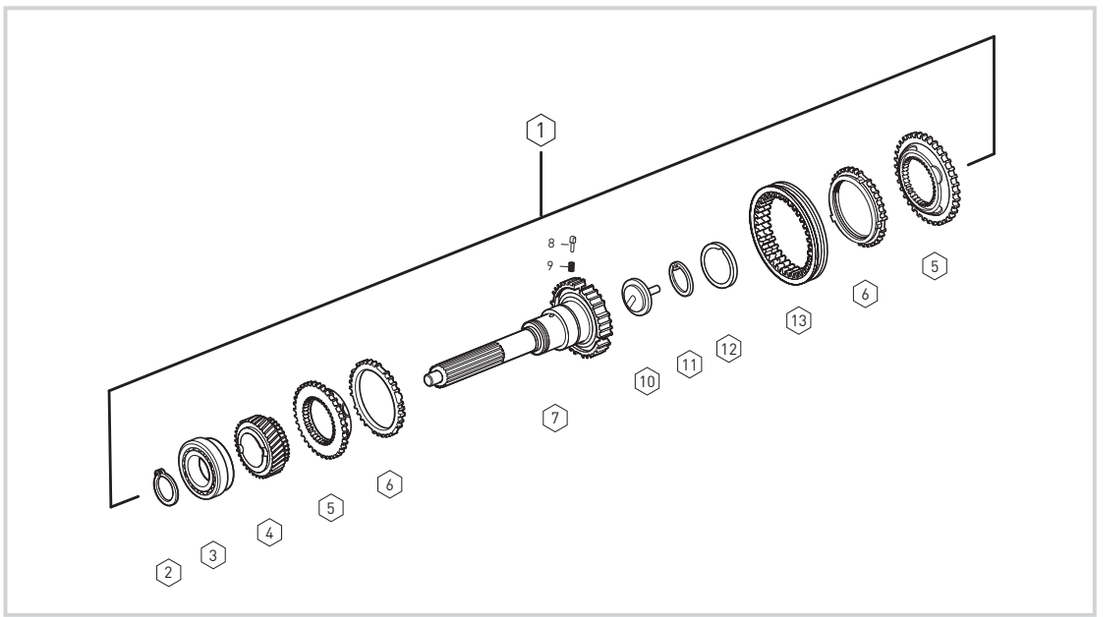

DG-TD

Fig.	Kacmaz No.	Oem No	Oem Old No	Pcs.	Ürün Tanımı	Description	Sizes
1	K20.00847	1315 102 079		Kit	PRİZDİREK KOMPLE	INPUT SHAFT COMPLETE	
2	K20.01897	0730 501 598		1	PRİZDİREK ÖN BİLYA SEGMANI	RETAINING RING	4.00 mm
3	K20.01104	0750 117 732		1	PRİZDİREK ÖN BİLYA	ROLLER BEARING	
4	K20.00163	1315 302 157		1	TAKVİYE DİŞLİSİ 30 DİŞ	CONSTANT GEAR 30 T	
5	K20.00101	1312 304 027		2	TAKVİYE KİLİT SENKROMENÇ	ENGAGING RING	
6	K20.00108	1297 304 484	(1297 304 402)	2	TAKVİYE FRENLEME	SYNCHRONIZING CONE	
7	K20.00668	1315 202 070	(1355 302 012)	1	PRİZDİREK	INPUT SHAFT	
8	K20.00111	1297 304 436		3	PRİZDİREK FİŞEĞİ	PRESSURE PIECE	
9	K20.00110	0732 040 409		3	PRİZDİREK FİŞEK YAYI	SPRING	
10	K20.01504	1315 302 196		1	PRİZDİREK YAĞ PİPETİ	OIL PIPET	
11	K20.01505	0630 502 027		1	PRİZDİREK SEGMANI	RETAINING RING	
12	K20.01011	0501 314 060	(0750 101 179)	1	PRİZDİREK ARKA KEÇE	OIL SEAL	
13	K20.00098	1310 304 202	(1310 304 174)	1	TAKVİYE SENK.HALKA	ENGAGING SLEEVE	
			(1312 304 057)				

Original parts names, oem numbers, symbols and descriptions used in this catalogue are for reference purposes only.

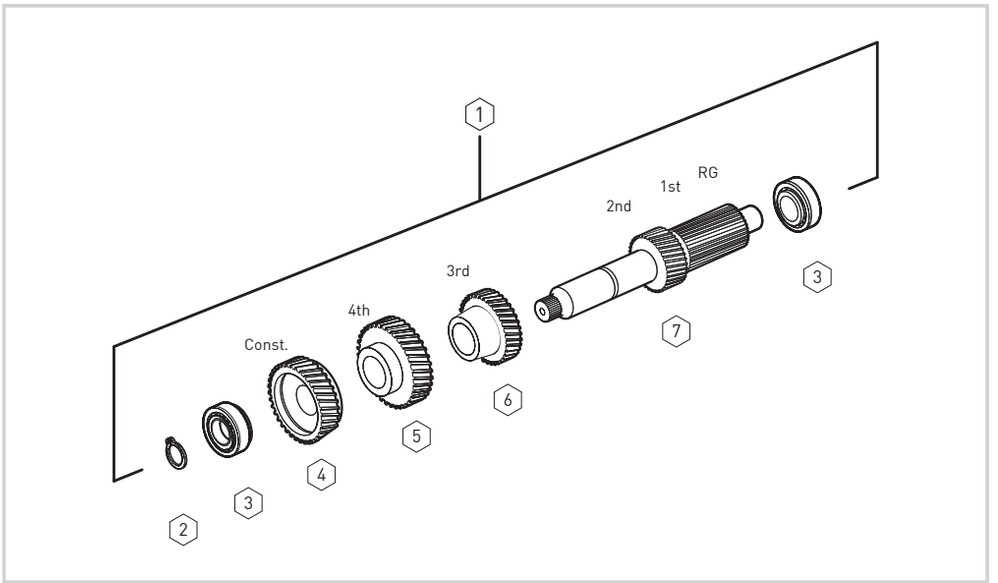

DG-TD

Fig.	Kacmaz No.	Oem No	Oem Old No	Pcs.	Ürün Tanımı	Description	Sizes
1	K20.00864	1315 103 017		Kit	GRUP MİLİ KOMPLE	COUNTER SHAFT COMPLETE	
2	K20.02200	0630 531 064		1	GRUP MİLİ ÖN BİLYA SEKMANI	RETAINING RING	50X2.50mm
3	K20.01126	0750 117 009	(0735 372 156)	2	GRUP MİLİ ÖN VE ARKA BİLYA	ROLLER BEARING	49.2X103.1X43.6mm
4	K20.00166	1315 303 008		1	TAKVİYE DİŞLİ KARŞILIĞI 39 DİŞ	CONSTANT GEAR 39 T	
5	K20.00168	1315 303 050		1	4.VİT.DİŞLİ KARŞILIĞI 35 DİŞ	GEAR 4th 35 T	
6	K20.00171	1315 303 004		1	3.VİT.DİŞLİ KARŞILIĞI 26 DİŞ	GEAR 3rd 26 T	
7	K20.00463	1315 303 063		1	GRUP MİLİ 17-20 DİŞ	COUNTER SHAFT 17-20 T	

SG-TO

Fig.	Kacmaz No.	Oem No	Oem Old No	Pcs.	Ürün Tanımı	Description	Sizes
1	K20.00863	1315 103 019		Kit	GRUP MİLİ KOMPLE	COUNTER SHAFT COMPLETE	
2	K20.02200	0630 531 064		1	GRUP MİLİ ÖN BİLYA SEKMANI	RETAINING RING	50X2.50mm
3	K20.01126	0750 117 009	(0735 372 156)	2	GRUP MİLİ ÖN VE ARKA BİLYA	ROLLER BEARING	49.2X103.1X43.6mm
4	K20.00165	1315 303 051	(1315 303 064)	1	TAKVİYE DİŞLİ KARŞILIĞI 32 DİŞ	CONSTANT GEAR 32 T	
5	K20.00168	1315 303 050		1	4.VİT.DİŞLİ KARŞILIĞI 35 DİŞ	GEAR 4th 35 T	
6	K20.00171	1315 303 004		1	3.VİT.DİŞLİ KARŞILIĞI 26 DİŞ	GEAR 3rd 26 T	
7	K20.00463	1315 303 063		1	GRUP MİLİ 17-20 DİŞ	COUNTER SHAFT 17-20 T	

Original parts names, oem numbers, symbols and descriptions used in this catalogue are for reference purposes only.

ECOSPLIT III	NEW ECOSPLIT
16 S 181	16 S 1920 TO 16 S 1920 TD 16 S 1921 TO 16 S 1921 TD 16 S 1922 TO 16 S 1922 TD 16 S 1923 TO 16 S 1923 TD 16 S 1925 TO 16 S 1925 TD 16 S 2021 TO 16 S 2021 TD 16 S 2220 TO 16 S 2220 TD 16 S 2221 TO 16 S 2221 TD 16 S 2222 TO 16 S 2222 TD 16 S 2223 TO 16 S 2223 TD 16 S 2225 TO 16 S 2225 TD

Original parts names, oem numbers, symbols and descriptions used in this catalogue are for reference purposes only.

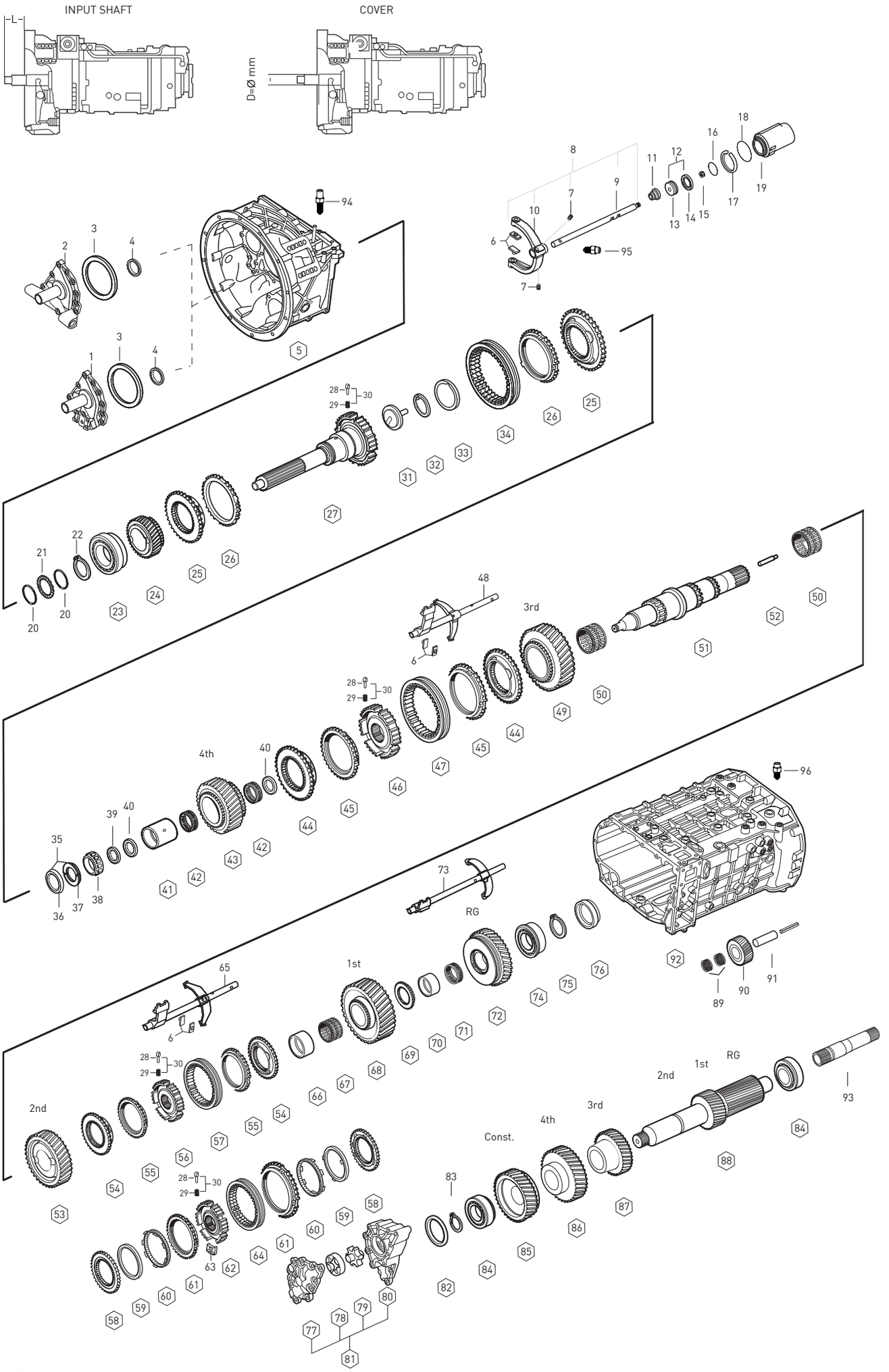

Original parts names, oem numbers, symbols and descriptions used in this catalogue are for reference purposes only.

Fig.	Kacmaz No.	Oem No	Oem Old No	Pcs.	Ürün Tanımı	Description	Sizes	Not	(X1) :SG 13.80-0.84	(X2) :DG 16.41-1.00	(X3) :DG 16.41-1.00
1	K20.00559	1315 302 075	(1315 402 075)	1	PRİZDİREK KEÇE KAPAĞI	COVER	L=7 D=60	(D)	◆	◆	◆
1	K20.00560	1315 302 136	(1315 402 136)	1	PRİZDİREK KEÇE KAPAĞI	COVER	L=7 D=60	(M)(R)(B)	◆	◆	◆
2	K20.00653	1315 302 072	(1315 402 072)	1	PRİZDİREK KEÇE KAPAĞI	COVER	L=3 D=62.6	(I)	◆	◆	◆
2	K20.00663	1315 302 134	(1315 302 122)	1	PRİZDİREK KEÇE KAPAĞI	COVER		(M)	◆	◆	◆
3	K20.01683	0730 007 486			PRİZ.ÖN BİLYA RAYNELİ	SHIM	2.00mm		◆	◆	◆
3	K20.01684	0730 007 483			PRİZ.ÖN BİLYA RAYNELİ	SHIM	1.85mm		◆	◆	◆
3	K20.01685	0730 007 479			PRİZ.ÖN BİLYA RAYNELİ	SHIM	1.65mm		◆	◆	◆
3	K20.01686	0730 007 136			PRİZ.ÖN BİLYA RAYNELİ	SHIM	1.60mm		◆	◆	◆
3	K20.01687	0730 007 129			PRİZ.ÖN BİLYA RAYNELİ	SHIM	1.25mm		◆	◆	◆
3	K20.01668	0730 005 748			PRİZ.ÖN BİLYA RAYNELİ	SHIM	0.90mm		◆	◆	◆
3	K20.01671	2050 309 067			PRİZ.ÖN BİLYA RAYNELİ	SHIM	0.30mm		◆	◆	◆
3	K20.01582	0730 005 747			PRİZ.ÖN BİLYA RAYNELİ	SHIM	0.25mm		◆	◆	◆
3	K20.01672	2050 309 068			PRİZ.ÖN BİLYA RAYNELİ	SHIM	0.20mm		◆	◆	◆
3	K20.01673	2001673			PRİZ.ÖN BİLYA RAYNELİ	SHIM	0.10mm		◆	◆	◆
4	K20.01003	0734 310 387	(0734 310 386)	1	PRİZDİREK KEÇESİ	OIL SEAL	55x75x8mm		◆	◆	◆
5		1316 201 142	(1316 301 064)	1	ŞANZIMAN ÖN GÖVDE	HOUSING			◆	◆	◆
5		1316 201 149		1	ŞANZIMAN ÖN GÖVDE	HOUSING			◆	◆	◆
6	K20.00325	1316 306 015		6	TAK.-1.-2.-3.-4.VİT. HİLAL PABUCU	SLIDING PAD			◆	◆	◆
7	K20.01688	1315 312 047		2	TAKVİYE HİLAL VİDASI	SCREW			◆	◆	◆
8	K20.00655	1316 212 010		1	TAKVİYE HİLALİ KOMPLE	G.S.FORK and RAILY ASSY.			◆	◆	◆
9	K20.00654	1316 312 023		1	TAKVİYE HİLAL MİLİ	G SHIFT RAIL			◆	◆	◆
10	K20.00635	1315 312 074		1	TAKVİYE HİLALİ	G SHIFT FORK			◆	◆	◆
11	K20.01026	0750 112 253	(0750 112 131)	1	TAKVİYE HİLAL MİL KEÇESİ	FLANCE PACKING	25x40x14.50mm		◆	◆	◆
12	K20.01779	0501 324 670		1	TAKVİYE PİSTON SİLİNDİRİ	PISTON			◆	◆	◆
13	K20.01772	1315 312 020		1	TAKVİYE HİLAL MİL PİSTONU	PISTON			◆	◆	◆
14	K20.01020	0750 112 177		1	TAKVİYE HAVA KEÇESİ	DOUBLE PACKING	55x63x9.40mm		◆	◆	◆
15	K20.01774	0737 006 095		1	TAK.HİLAL MİL SOMUNU	NUT	M16x1.50mm		◆	◆	◆
16		0634 313 320		1	TAKVİYE SİLİNDİR ORİNGİ	O-RING			◆	◆	◆
17	K20.01689	1315 312 034		1	TAKVİYE SİLİNDİR SEGMANI	RETAINING RING			◆	◆	◆
18		0634 313 018		1	TAKVİYE SİLİNDİR ORİNGİ	O-RING			◆	◆	◆
19	K20.00885	1316 312 015		1	TAKVİYE SİLİNDİR GÖVDESİ	CYLINDER			◆	◆	◆
20	K20.01530	0730 150 766		2	P.DİREK YAĞLAMA PULU	THRUST WASHER			◆	◆	◆
21		1315 302 040		1	P.DİREK YAĞLAMA PUL SACI	SPACER RING			◆	◆	◆
22	K20.01897	0730 501 598		1	P.DİREK B.BİLYA SEGMANI	RETAINING RING			◆	◆	◆
23	K20.01104	0750 117 732		1	PRİZDİREK ÖN BİLYA	ROLLER BEARING	85X150X30.5mm		◆	◆	◆
24	K20.00214	1316 302 057		1	OVARDİRE DİŞLİSİ 35 DİŞ	CONSTANT GEAR 35 T			◆		
24	K20.00196	1316 302 066		1	OVARDİRE DİŞLİSİ 30 DİŞ	CONSTANT GEAR 30 T				◆	
24	K20.00557	1316 302 056		1	OVARDİRE DİŞLİSİ 30 DİŞ	CONSTANT GEAR 30 T					◆
25	K20.00101	1312 304 027		2	TAKVİYE SENKROMENÇ	ENGAGING RING			◆	◆	◆
26	K20.00108	1297 304 484	(1297 304 402)	2	TAKVİYE SENK.FRENLEME	SYNCHRONIZING CONE			◆	◆	◆
27	K20.00187	1316 202 025	(1316 302 085)	1	PRİZDİREK	INPUT SHAFT	L=9 SAE 2	(M)(R)(B)	◆	◆	◆

NOTES :

X1,X2,X3 are used conjunction with the encoded parts.
Alphabetical Coding has been done according to Input Shaft

X1 : 16 S 181 SG, 16 S 1920 TO, 16 S 1921 TO 16 S 1922 TO
16 S 1923 TO, 16 S 1925 TO 16 S 2021 TO, 16 S 2220 TO
16 S 2220 TO, 16 S 2221 TO, 16 S 2222 TO, 16 S 2223 TO, 16 S 2225 TO

X2-X3 : 16 S 181 SG, 16 S 1920 TD, 16 S 1921 TD, 16 S 1922 TD
16 S 1923 TD, 16 S 1925 TD 16 S 2021 TD, 16 S 2220 TD
16 S 2220 TD, 16 S 2221 TD, 16 S 2222 TD, 16 S 2223 TD, 16 S 2225 TD

NOTLAR :

X1,X2,X3 ile kodlanan parçalar birlikte kullanılır.
Alfabetik kodlamalar prizdireklere göre yapılmıştır.

X1 : 16 S 181 SG, 16 S 1920 TO, 16 S 1921 TO 16 S 1922 TO
16 S 1923 TO, 16 S 1925 TO 16 S 2021 TO, 16 S 2220 TO
16 S 2220 TO, 16 S 2221 TO, 16 S 2222 TO, 16 S 2223 TO, 16 S 2225 TO

X2-X3 : 16 S 181 SG, 16 S 1920 TD, 16 S 1921 TD, 16 S 1922 TD
16 S 1923 TD, 16 S 1925 TD 16 S 2021 TD, 16 S 2220 TD
16 S 2220 TD, 16 S 2221 TD, 16 S 2222 TD, 16 S 2223 TD, 16 S 2225 TD

Original parts names, oem numbers, symbols and descriptions used in this catalogue are for reference purposes only.

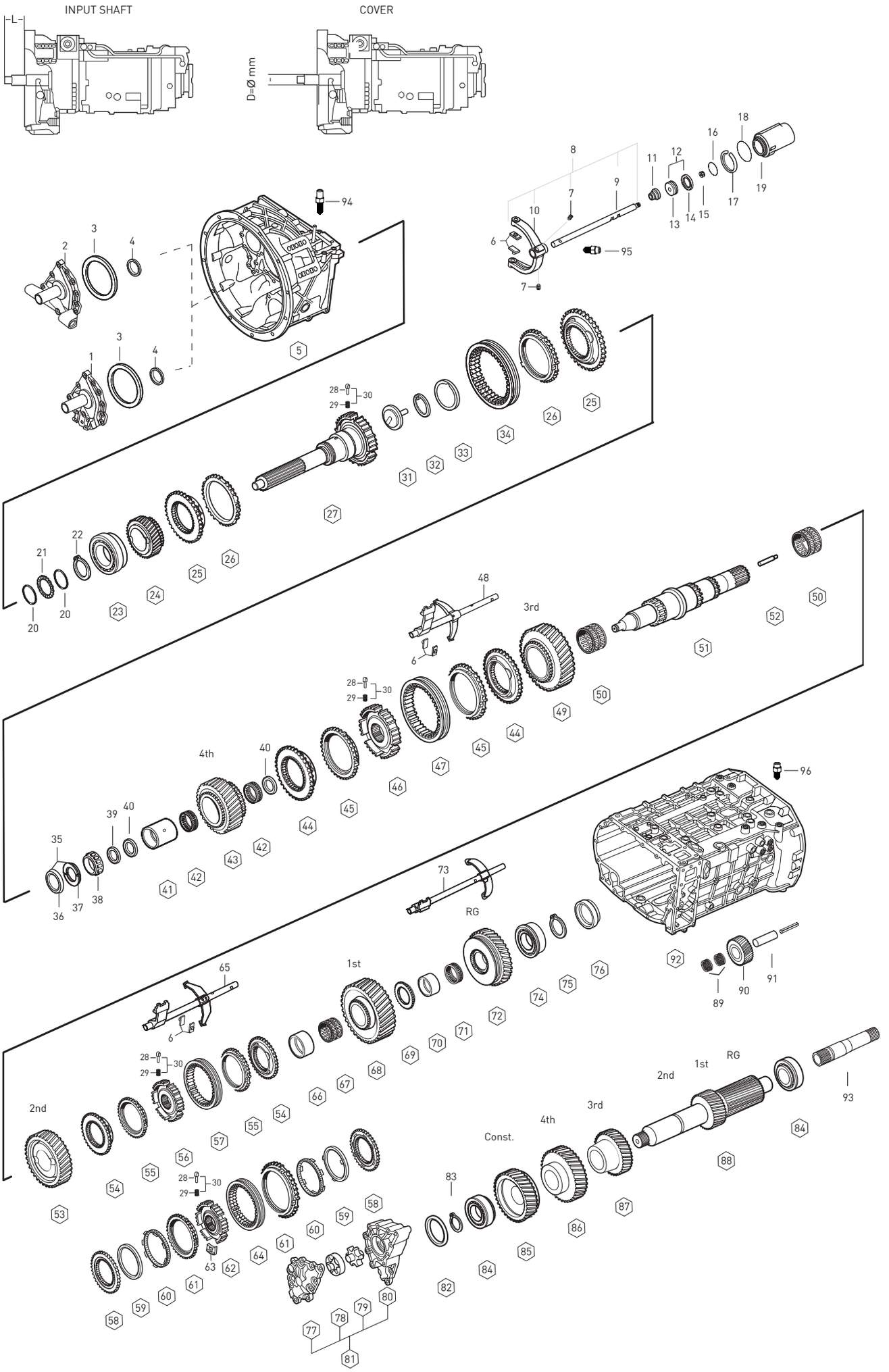

Original parts names, oem numbers, symbols and descriptions used in this catalogue are for reference purposes only.

Fig.	Kacmaz No.	Oem No	Oem Old No	Pcs.	Ürün Tanımı	Description	Sizes	Notes	(X1) :SG 13.80-0.84	(X2) :DG 16.41-1.00	(X3) :DG 16.41-1.00
27	K20.00188	1316 202 026	(1316 302 079)	1	PRİZDİREK	INPUT SHAFT	L=109 SAE 2	(I)	◆	◆	◆
27	K20.00190	1316 202 038	(1316 302 091)	1	PRİZDİREK	INPUT SHAFT	L=109 SAE 2	(RVI)	◆	◆	◆
28	K20.00110	0732 040 409		9	PRİZ.veYILDIZ DİŞLİ FİŞEĞİ	PRESSURE PIECE			◆	◆	◆
29	K20.00111	1297 304 436		9	PRİZ.veYILDIZ DİŞLİ FİŞEK YAYI	SPRING			◆	◆	◆
30	K20.01745	1295 298 956		kit	YAY FİŞEK TAKIMI	REPAIR KIT			◆	◆	◆
31	K20.01504	1315 302 196		1	PRİZDİREK YAĞ PİPETİ	OIL PIPET			◆	◆	◆
32	K20.01505	0630 502 027		1	PRİZDİREK SEGMANI	RETANING RING	472/50X2mm		◆	◆	◆
33	K20.01011	0501 314 060	(0750 101 179)	1	PRİZDİREK ARKA KEÇE	OIL SEAL			◆	◆	◆
34	K20.00098	1310 304 202	(1310 304 174)	1	TAKVİYE VİT.SENK.HALKA	ENGAGING SLEEVE			◆	◆	◆
			(1312 302 057)								
35	K20.01561	1499 298 027		1	EMN.SACI VE P.KİLİT TAK.	SPLIT RING KIT	5.00mm		◆	◆	◆
35	K20.01563	1499 298 026		1	EMN.SACI VE P.KİLİT TAK.	SPLIT RING KIT	4.90mm		◆	◆	◆
35	K20.01580	2001580		1	EMN.SACI VE P.KİLİT TAK.	SPLIT RING KIT	4.85mm		◆	◆	◆
35	K20.01565	1499 298 025		1	EMN.SACI VE P.KİLİT TAK.	SPLIT RING KIT	4.80mm		◆	◆	◆
35	K20.01567	1499 298 024		1	EMN.SACI VE P.KİLİT TAK.	SPLIT RING KIT	4.70mm		◆	◆	◆
35	K20.01569	1499 298 023		1	EMN.SACI VE P.KİLİT TAK.	SPLIT RING KIT	4.60mm		◆	◆	◆
36	K20.01571	0730 062 781		1	P. KİLİT EMNİYET SACI	RETAINING RING			◆	◆	◆
37	K20.01562	0730 107 023		2	PARÇALI KİLİT	SPLIT RING	5.00mm		◆	◆	◆
37	K20.01564	0730 107 022		2	PARÇALI KİLİT	SPLIT RING	4.90mm		◆	◆	◆
37	K20.01581	2001581		2	PARÇALI KİLİT	SPLIT RING	4.85mm		◆	◆	◆
37	K20.01566	0730 107 021		2	PARÇALI KİLİT	SPLIT RING	4.80mm		◆	◆	◆
37	K20.01568	0730 107 020		2	PARÇALI KİLİT	SPLIT RING	4.70mm		◆	◆	◆
37	K20.01570	0730 107 019		2	PARÇALI KİLİT	SPLIT RING	4.60mm		◆	◆	◆
38	K20.01109	0750 117 232	(0735 371 563)	1	KAMALI MİL UÇ BİLYA	ROLLER BEARING	42X40.3mm		◆	◆	◆
39	K20.01781	1315 304 051		1	KAMALI MİL UÇ BİLYA PULU	THRUST WASHER	8.30mm		◆	◆	◆
39	K20.01527	1315 304 048		1	KAMALI MİL UÇ BİLYA PULU	THRUST WASHER	8.00mm		◆	◆	◆
39	K20.01528	1315 304 047		1	KAMALI MİL UÇ BİLYA PULU	THRUST WASHER	7.90mm		◆	◆	◆
39	K20.01529	1315 304 046		1	KAMALI MİL UÇ BİLYA PULU	THRUST WASHER	7.80mm		◆	◆	◆
39	K20.01762	1315 304 045		1	KAMALI MİL UÇ BİLYA PULU	THRUST WASHER	7.70mm		◆	◆	◆
39	K20.01763	1315 304 044		1	KAMALI MİL UÇ BİLYA PULU	THRUST WASHER	7.60mm		◆	◆	◆
39	K20.01764	1315 304 043		1	KAMALI MİL UÇ BİLYA PULU	THRUST WASHER	7.50mm		◆	◆	◆
39	K20.01765	1315 304 085		1	KAMALI MİL UÇ BİLYA PULU	THRUST WASHER	7.40mm		◆	◆	◆
39	K20.01766	1315 304 086		1	KAMALI MİL UÇ BİLYA PULU	THRUST WASHER	7.30mm		◆	◆	◆
40	K20.01533	0750 101 158		2	4.VİT.ÇANAK ALIN PULU	THRUST WASHER			◆	◆	◆
41	K20.00388	0750 119 124		1	4.VİT.MAS.BİL.ÇANAĞI	BEARING RACE	67X77X66.1mm		◆	◆	◆
42	K20.01303	0750 115 531	(0750 115 534)	2	4.VİTES DİŞLİ MAS.BİLYA	NEEDLE CAGE	77X101X29mm		◆	◆	◆
43	K20.00208	1316 304 103		1	4.VİTES DİŞLİSİ 32 DİŞ	GEAR 4th 32 T			◆	◆	◆
44	K20.00102	1316 304 159	(1316 304 145)	2	3./ 4.VİT.SENKROMENÇ	ENGAGING RING			◆	◆	◆
44	K20.00881	1316 304 190		2	3./ 4.VİT.SENKROMENÇ	ENGAGING RING	NEW		◆	◆	◆
45	K20.00109	1316 304 168	(1297 304 402)	2	3./ 4.VİT.SENK.FRENLEME	SYNCHRONIZING CONE			◆	◆	◆
45	K20.00880	1316 304 189		2	3./ 4.VİT.SENK.FRENLEME	SYNCHRONIZING CONE	NEW		◆	◆	◆

NOTES :

X1,X2,X3 are used conjunction with the encoded parts.
Alphabetical Coding has been done according to Input Shaft

X1 : 16 S 181 SG, 16 S 1920 TO, 16 S 1921 TO 16 S 1922 TO
16 S 1923 TO, 16 S 1925 TO 16 S 2021 TO, 16 S 2220 TO
16 S 2220 TO, 16 S 2221 TO, 16 S 2222 TO, 16 S 2223 TO, 16 S 2225 TO

X2-X3 : 16 S 181 SG, 16 S 1920 TD, 16 S 1921 TD, 16 S 1922 TD
16 S 1923 TD, 16 S 1925 TD 16 S 2021 TD, 16 S 2220 TD
16 S 2220 TD, 16 S 2221 TD, 16 S 2222 TD, 16 S 2223 TD, 16 S 2225 TD

NOTLAR :

X1,X2,X3 ile kodlanan parçalar birlikte kullanılır.
Alfabetik kodlamalar prizdireklere göre yapılmıştır.

X1 : 16 S 181 SG, 16 S 1920 TO, 16 S 1921 TO 16 S 1922 TO
16 S 1923 TO, 16 S 1925 TO 16 S 2021 TO, 16 S 2220 TO
16 S 2220 TO, 16 S 2221 TO, 16 S 2222 TO, 16 S 2223 TO, 16 S 2225 TO

X2-X3 : 16 S 181 SG, 16 S 1920 TD, 16 S 1921 TD, 16 S 1922 TD
16 S 1923 TD, 16 S 1925 TD 16 S 2021 TD, 16 S 2220 TD
16 S 2220 TD, 16 S 2221 TD, 16 S 2222 TD, 16 S 2223 TD, 16 S 2225 TD

Original parts names, oem numbers, symbols and descriptions used in this catalogue are for reference purposes only.

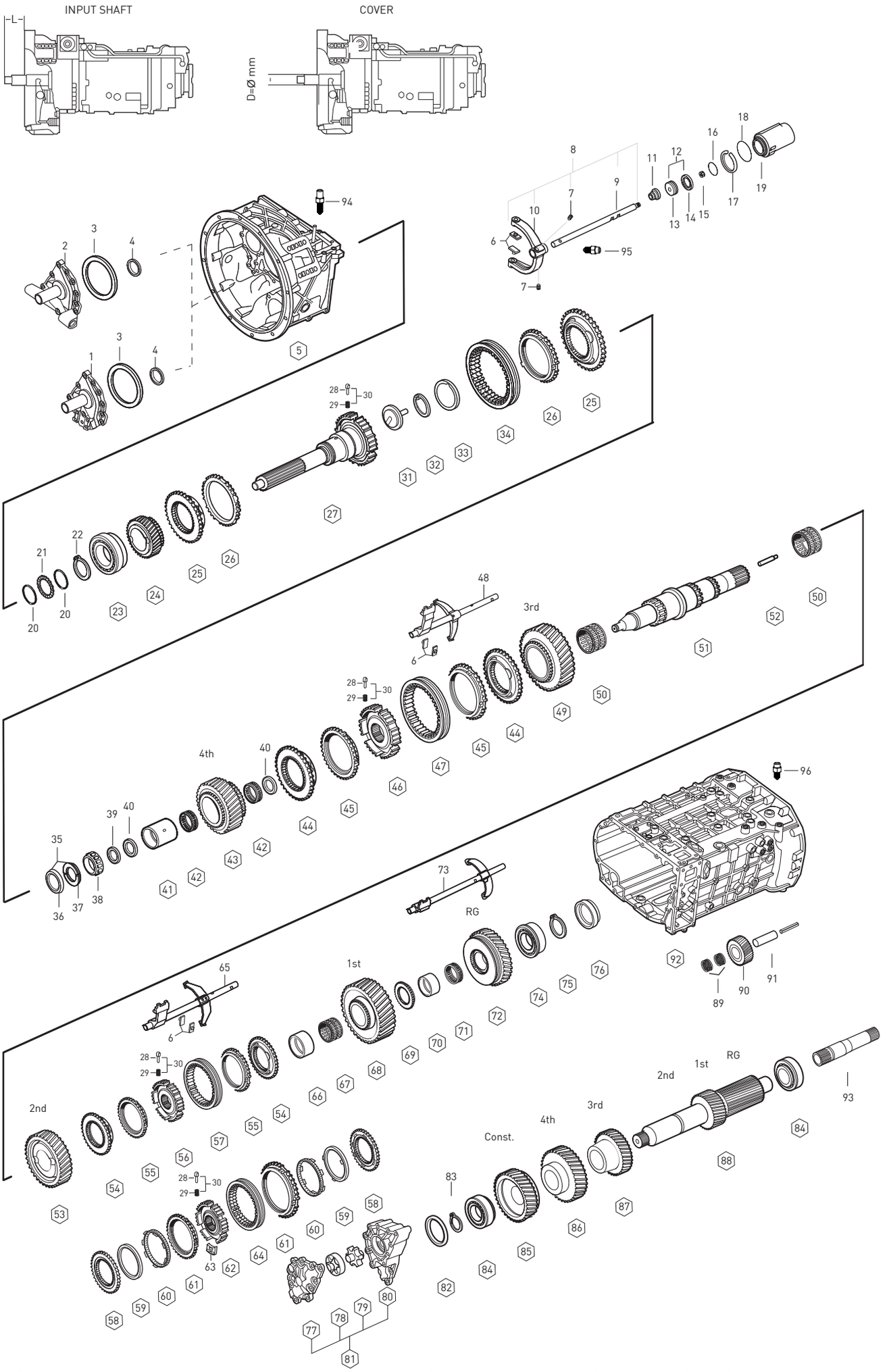

Original parts names, oem numbers, symbols and descriptions used in this catalogue are for reference purposes only.

Fig.	Kacmaz No.	Oem No	Oem Old No	Pcs.	Ürün Tanımı	Description	Sizes	Notes	(X1) :SG 13.80-0.84	(X2) :DG 16.41-1.00	(X3) :DG 16.41-1.00
46	K20.00136	1316 304 162		1	3./ 4.VİT.YILDIZ DİŞLİ	GUIDE SLEEVE			◆	◆	◆
46	K20.00898	1356 304 019		1	3./ 4.VİT.YILDIZ DİŞLİ	GUIDE SLEEVE	NEW		◆	◆	◆
47	K20.00103	1316 304 167	(0769 186 281)	1	3./ 4.VİT.SENK.HALKA	ENGAGING SLEEVE			◆	◆	◆
			(1297 304 515)								
			(1315 304 135)								
47	K20.00871	1356 304 023	(1316 304 188)	1	3./ 4.VİT.SENK.HALKA	ENGAGING SLEEVE	NEW		◆	◆	◆
48		1316 206 058		1	3./4.VİTES HİLALİ	GEAR SHIFT FORK 3rd/4th			◆	◆	◆
49	K20.00219	1316 304 094		1	3.VİTES DİŞLİSİ 34 DİŞ	GEAR 3rd 34 T			◆	◆	◆
50	K20.01326	0750 115 303	(0735 321 094)	2	2./3.VİTES MASURA BİLYA	NEEDLE CAGE	92x100x63mm		◆	◆	◆
51	K20.00301	1316 304 132	(1316 304 079)	1	KAMALI MİL	MAIN SHAFT			◆	◆	◆
52	K20.01506	1324 304 014	(1312 304 150)	1	KAMALI MİL YAĞ BORUSU	OIL PIPE			◆	◆	◆
53	K20.00213	1316 304 002		1	2.VİTES DİŞLİSİ 38 DİŞ	GEAR 2nd 38 T			◆	◆	◆
54	K20.00183	1316 304 156		2	1./ 2.VİT.SENKROMENÇ	ENGAGING RING			◆	◆	◆
55	K20.00113	1316 304 170	(1316 304 150)	2	1./ 2.VİT.SENK.FRENLEME	SYNCHRONIZING CONE			◆	◆	◆
56	K20.00180	1316 304 163		1	1./ 2.VİT.YILDIZ DİŞLİ	GUIDE SLEEVE			◆	◆	◆
57	K20.00114	1316 304 169	(1315 304 136)	1	1./ 2.VİT.SENK.HALKA	ENGAGING SLEEVE			◆	◆	◆
58	K20.00143	1312 304 106		2	1./ 2.VİT.SENKROMENÇ	ENGAGING RING			◆	◆	◆
59	K20.00144	1268 304 424		2	1./ 2.VİT.SENK.FRENLEME	SYNCHRONIZING CONE			◆	◆	◆
60	K20.00302	1268 304 494	(1268 304 491)	2	1./ 2.VİT.SENK.FRENLEME	INTERMEDIATE CONE			◆	◆	◆
61	K20.00145	1268 304 525		2	1./ 2.VİT.SENK.FRENLEME	SYNCHRONIZING CONE			◆	◆	◆
62	K20.00146	1312 304 158		1	1./ 2.VİT.YILDIZ DİŞLİ	GUIDE SLEEVE			◆	◆	◆
63	K20.00209	1312 304 159		3	1./ 2.VİT.YILDIZ DİŞLİ BAKLASI	SLIDING BLOCK			◆	◆	◆
64	K20.00147	1310 304 175	(1312 304 157)	1	1./ 2.VİT.SENK.HALKA	ENGAGING SLEEVE			◆	◆	◆
65		1316 206 055		1	1./2.VİTES HİLALİ	GEAR SHIFT FORK 1st/2nd			◆	◆	◆
66	K20.00389	1312 304 084		1	1.VİTES MAS.BİLYA ÇANAĞI	BEARING RACE			◆	◆	◆
67	K20.01328	0750 115 327		1	1.VİTES MASURA BİLYA	NEEDLE CAGE	96X104X72mm		◆	◆	◆
68	K20.00420	1316 304 010		1	1.VİTES DİŞLİSİ 47 DİŞ	GEAR 1st 47 T			◆	◆	◆
69	K20.00421	1312 304 124		1	GERİ VİTES YILDIZ DİŞLİ	HUB			◆	◆	◆
70	K20.00422	1316 304 133	(1312 304 082)	1	GERİ VİT.MAS.BİL.ÇANAĞI	BEARING RACE			◆	◆	◆
71	K20.01330	0750 115 326		1	GERİ VİTES MASURA BİLYA	NEEDLE CAGE	90X98X50mm		◆	◆	◆
72	K20.00423	1316 304 235	(1316 304 012)	1	GERİ VİTES DİŞLİSİ 44 DİŞ	REVERSE GEAR 44 T			◆	◆	◆
73		1316 206 061		1	GERİ VİTES HİLALİ	GEAR SHIFT FORK/RG			◆	◆	◆
74	K20.01121	0750 117 678		1	KAMALI MİL ARKA BİLYA	ROLLER BEARING	80X140X36.5mm		◆	◆	◆
75	K20.02151	0630 501 339		1	K.MİL ARKA BİLYA SEGMANI	RETAINING RING	80x3.65mm		◆	◆	◆
75		0630 501 338		1	K.MİL ARKA BİLYA SEGMANI	RETAINING RING	80x3.60mm		◆	◆	◆
75	K20.02146	0630 501 316		1	K.MİL ARKA BİLYA SEGMANI	RETAINING RING	80x3.50mm		◆	◆	◆
75	K20.02147	0630 501 315		1	K.MİL ARKA BİLYA SEGMANI	RETAINING RING	80x3.40mm		◆	◆	◆
75	K20.02141	0630 501 314		1	K.MİL ARKA BİLYA SEGMANI	RETAINING RING	80x3.30mm		◆	◆	◆
75	K20.02148	0630 501 313		1	K.MİL ARKA BİLYA SEGMANI	RETAINING RING	80x3.20mm		◆	◆	◆
75		0630 501 333		1	K.MİL ARKA BİLYA SEGMANI	RETAINING RING	80x3.15mm		◆	◆	◆
75		0630 501 312		1	K.MİL ARKA BİLYA SEGMANI	RETAINING RING	80x3.10mm		◆	◆	◆

NOTES :

X1,X2,X3 are used conjunction with the encoded parts.
Alphabetical Coding has been done according to Input Shaft

X1 : 16 S 181 SG, 16 S 1920 TO, 16 S 1921 TO 16 S 1922 TO
16 S 1923 TO, 16 S 1925 TO 16 S 2021 TO, 16 S 2220 TO
16 S 2220 TO, 16 S 2221 TO, 16 S 2222 TO, 16 S 2223 TO, 16 S 2225 TO

X2-X3 : 16 S 181 SG, 16 S 1920 TD, 16 S 1921 TD, 16 S 1922 TD
16 S 1923 TD, 16 S 1925 TD 16 S 2021 TD, 16 S 2220 TD
16 S 2220 TD, 16 S 2221 TD, 16 S 2222 TD, 16 S 2223 TD, 16 S 2225 TD

NOTLAR :

X1,X2,X3 ile kodlanan parçalar birlikte kullanılır.
Alfabetik kodlamalar prizdireklere göre yapılmıştır.

X1 : 16 S 181 SG, 16 S 1920 TO, 16 S 1921 TO 16 S 1922 TO
16 S 1923 TO, 16 S 1925 TO 16 S 2021 TO, 16 S 2220 TO
16 S 2220 TO, 16 S 2221 TO, 16 S 2222 TO, 16 S 2223 TO, 16 S 2225 TO

X2-X3 : 16 S 181 SG, 16 S 1920 TD, 16 S 1921 TD, 16 S 1922 TD
16 S 1923 TD, 16 S 1925 TD 16 S 2021 TD, 16 S 2220 TD
16 S 2220 TD, 16 S 2221 TD, 16 S 2222 TD, 16 S 2223 TD, 16 S 2225 TD

Original parts names, oem numbers, symbols and descriptions used in this catalogue are for reference purposes only.

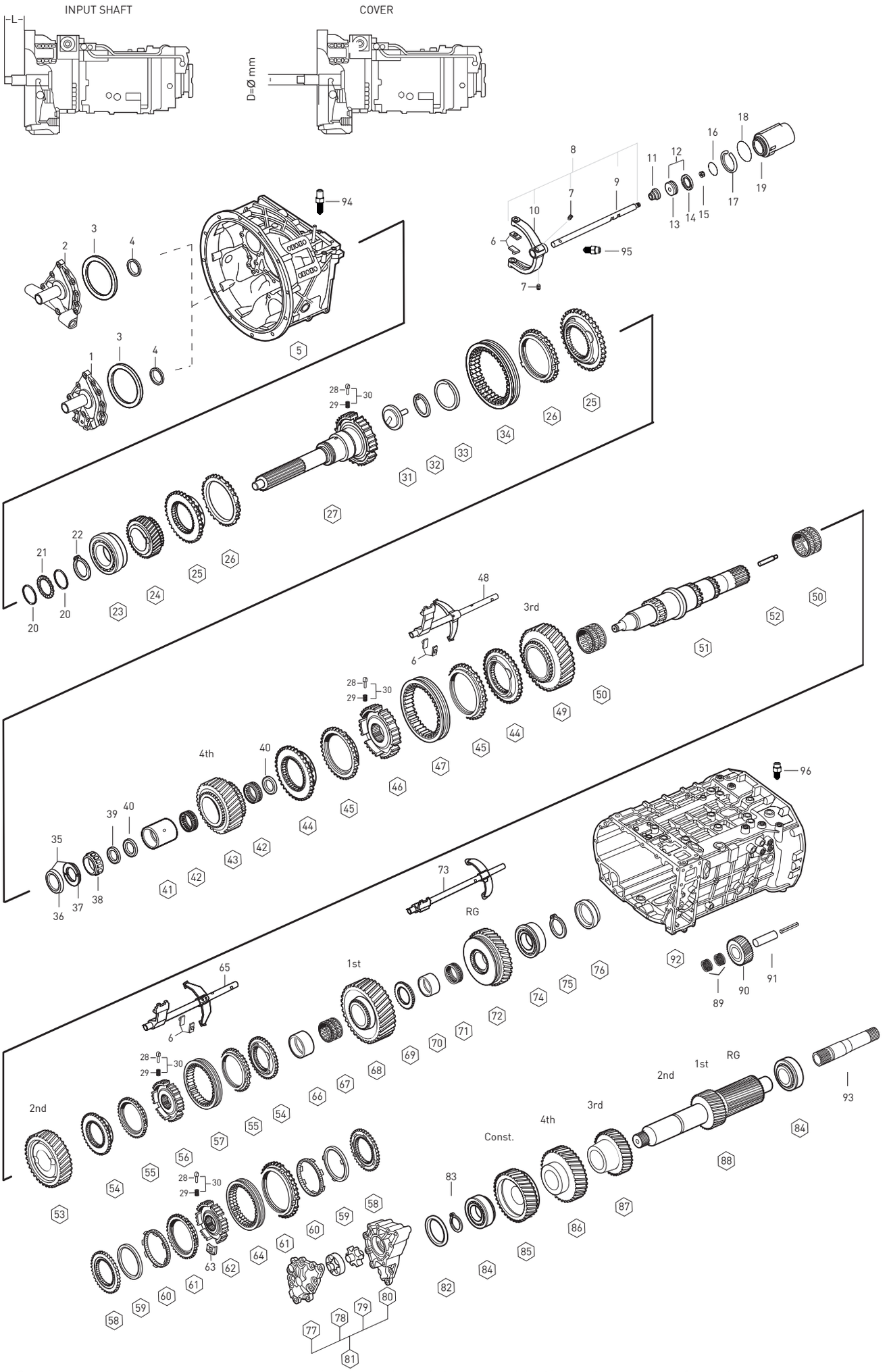

Original parts names, oem numbers, symbols and descriptions used in this catalogue are for reference purposes only.

Fig.	Kacmaz No.	Oem No	Oem Old No	Pcs.	Ürün Tanımı	Description	Sizes	Not	(X1) :SG 13.80-0.84	(X2) :DG 16.41-1.00	(X3) :DG 16.41-1.00
76	K20.01692	1316 332 109		1	KAMALI MİL ARKA PUL	WASHER			◆	◆	◆
77	K20.00568	1315 302 120	(1315 402 120)	1	ŞANZ.YAĞ POMPA KAPAĞI	PUMP COVER			◆	◆	◆
78	K20.00542	1314 202 039		1	YAĞ POMPA İÇ ROTOR	OIL PUMP GEAR			◆	◆	◆
79	K20.00543	1315 303 027		1	YAĞ POMPA DIŞ ROTOR	ROTOR			◆	◆	◆
80	K20.00569	1315 302 121	(1315 402 121)	1	ŞANZ.YAĞ POMPA GÖVDESİ	PUMP HOUSING			◆	◆	◆
81	K20.00570	2000570		kit	ŞANZ.YAĞ POMPASI KOMPLE	OIL PUMP ASSY.			◆	◆	◆
82	K20.01674	0730 106 917		1	G.MİLİ ÖN BİLYA RAYNELİ	SHIM	3.00mm		◆	◆	◆
82		0730 106 916		1	G.MİLİ ÖN BİLYA RAYNELİ	SHIM	2.95mm		◆	◆	◆
82	K20.01751	0730 106 915		1	G.MİLİ ÖN BİLYA RAYNELİ	SHIM	2.90mm		◆	◆	◆
82	K20.01750	0730 106 913		1	G.MİLİ ÖN BİLYA RAYNELİ	SHIM	2.80mm		◆	◆	◆
82	K20.01749	0730 106 911		1	G.MİLİ ÖN BİLYA RAYNELİ	SHIM	2.70mm		◆	◆	◆
82	K20.01675	0730 106 909		1	G.MİLİ ÖN BİLYA RAYNELİ	SHIM	2.60mm		◆	◆	◆
82	K20.01748	0730 100 799		1	G.MİLİ ÖN BİLYA RAYNELİ	SHIM	2.50mm		◆	◆	◆
82	K20.01747	0730 100 801		1	G.MİLİ ÖN BİLYA RAYNELİ	SHIM	2.40mm		◆	◆	◆
82	K20.01746	0730 100 803		1	G.MİLİ ÖN BİLYA RAYNELİ	SHIM	2.30mm		◆	◆	◆
82	K20.01676	0730 101 467		1	G.MİLİ ÖN BİLYA RAYNELİ	SHIM	2.20mm		◆	◆	◆
82		0730 101 469		1	G.MİLİ ÖN BİLYA RAYNELİ	SHIM	2.10mm		◆	◆	◆
82	K20.01739	0730 106 906		1	G.MİLİ ÖN BİLYA RAYNELİ	SHIM	1.90mm		◆	◆	◆
82	K20.01752	2001752		1	G.MİLİ ÖN BİLYA RAYNELİ	SHIM	0.50mm		◆	◆	◆
82	K20.01778	2001778		1	G.MİLİ ÖN BİLYA RAYNELİ	SHIM	0.30mm		◆	◆	◆
82	K20.01679	2001679		1	G.MİLİ ÖN BİLYA RAYNELİ	SHIM	0.20mm		◆	◆	◆
82	K20.01680	2001680		1	G.MİLİ ÖN BİLYA RAYNELİ	SHIM	0.10mm		◆	◆	◆
83		0631 531 065		1	G.MİLİ ÖN BİLYA SEGMANI	RETAINING RING	50x3mm		◆	◆	◆
84	K20.01126	0750 117 009	(0735 372 156)	2	GRUP MİLİ BİLYASI	ROLLER BEARING	49.20x103.10x43.60mm		◆	◆	◆
85	K20.00215	1316 303 056		1	OVARD.DİŞLİ KARŞILIĞI 32 DİŞ	CONSTANT GEAR 32 T			◆		
85	K20.00216	1316 303 055		1	OVARD.DİŞLİ KARŞILIĞI 39 DİŞ	CONSTANT GEAR 39 T				◆	◆
86	K20.00217	1316 303 063		1	4.VİTES DİŞLİ KARŞILIĞI 35 DİŞ	GEAR 4th 35 T			◆	◆	◆
87	K20.00218	1316 303 058		1	3.VİTES DİŞLİ KARŞILIĞI 26 DİŞ	GEAR 3rd 26 T			◆	◆	◆
88	K20.00424	1316 303 033		1	GRUP MİLİ 17-20 DİŞ	COUNTER SHAFT 17-20 T			◆	◆	◆
89	K20.01338	0750 115 369		2	KÜÇÜK GERİ VİT.MASURA BİLYA	NEEDLE CAGE	45.0x57.0x25.0mm		◆	◆	◆
90	K20.00656	1316 305 001	(1316 305 008)	1	K.GERİ VİTES DİŞLİSİ 22 DİŞ	REV.IDLER GEAR 22 T			◆	◆	◆
91	K20.00657	1316 201 029		1	KÜÇÜK GERİ VİTES PİMİ	PIN			◆	◆	◆
92		1316 201 110		1	ŞANZIMAN ORTA GÖVDE	HOUSING			◆	◆	◆
93	K20.00983	1316 203 001	(1316 303 036)	1	ŞANZIMAN DAMPER MİLİ	SHAFT			◆	◆	◆
94	K20.00813	1324 207 004	(1315 207 014)	1	İSTİNATLAMA FİŞEĞİ	DETENT PLUNGER	168 N		◆	◆	◆
95	K20.00819	1324 207 033	(1313 207 003)	1	İSTİNATLAMA FİŞEĞİ	DETENT PLUNGER	235 N		◆	◆	◆
96	K20.00838	1324 207 035	(1313 207 005)	1	İSTİNATLAMA FİŞEĞİ	DETENT PLUNGER	145 N		◆	◆	◆
			(1313 207 001)								

NOTES :

X1,X2,X3 are used conjunction with the encoded parts.
Alphabetical Coding has been done according to Input Shaft

X1 : 16 S 181 SG, 16 S 1920 TO, 16 S 1921 TO 16 S 1922 TO
16 S 1923 TO, 16 S 1925 TO 16 S 2021 TO, 16 S 2220 TO
16 S 2220 TO, 16 S 2221 TO, 16 S 2222 TO, 16 S 2223 TO, 16 S 2225 TO

X2-X3 : 16 S 181 SG, 16 S 1920 TD, 16 S 1921 TD, 16 S 1922 TD
16 S 1923 TD, 16 S 1925 TD 16 S 2021 TD, 16 S 2220 TD
16 S 2220 TD, 16 S 2221 TD, 16 S 2222 TD, 16 S 2223 TD, 16 S 2225 TD

NOTLAR :

X1,X2,X3 ile kodlanan parçalar birlikte kullanılır.
Alfabetik kodlamalar prizdireklere göre yapılmıştır.

X1 : 16 S 181 SG, 16 S 1920 TO, 16 S 1921 TO 16 S 1922 TO
16 S 1923 TO, 16 S 1925 TO 16 S 2021 TO, 16 S 2220 TO
16 S 2220 TO, 16 S 2221 TO, 16 S 2222 TO, 16 S 2223 TO, 16 S 2225 TO

X2-X3 : 16 S 181 SG, 16 S 1920 TD, 16 S 1921 TD, 16 S 1922 TD
16 S 1923 TD, 16 S 1925 TD 16 S 2021 TD, 16 S 2220 TD
16 S 2220 TD, 16 S 2221 TD, 16 S 2222 TD, 16 S 2223 TD, 16 S 2225 TD

Original parts names, oem numbers, symbols and descriptions used in this catalogue are for reference purposes only.

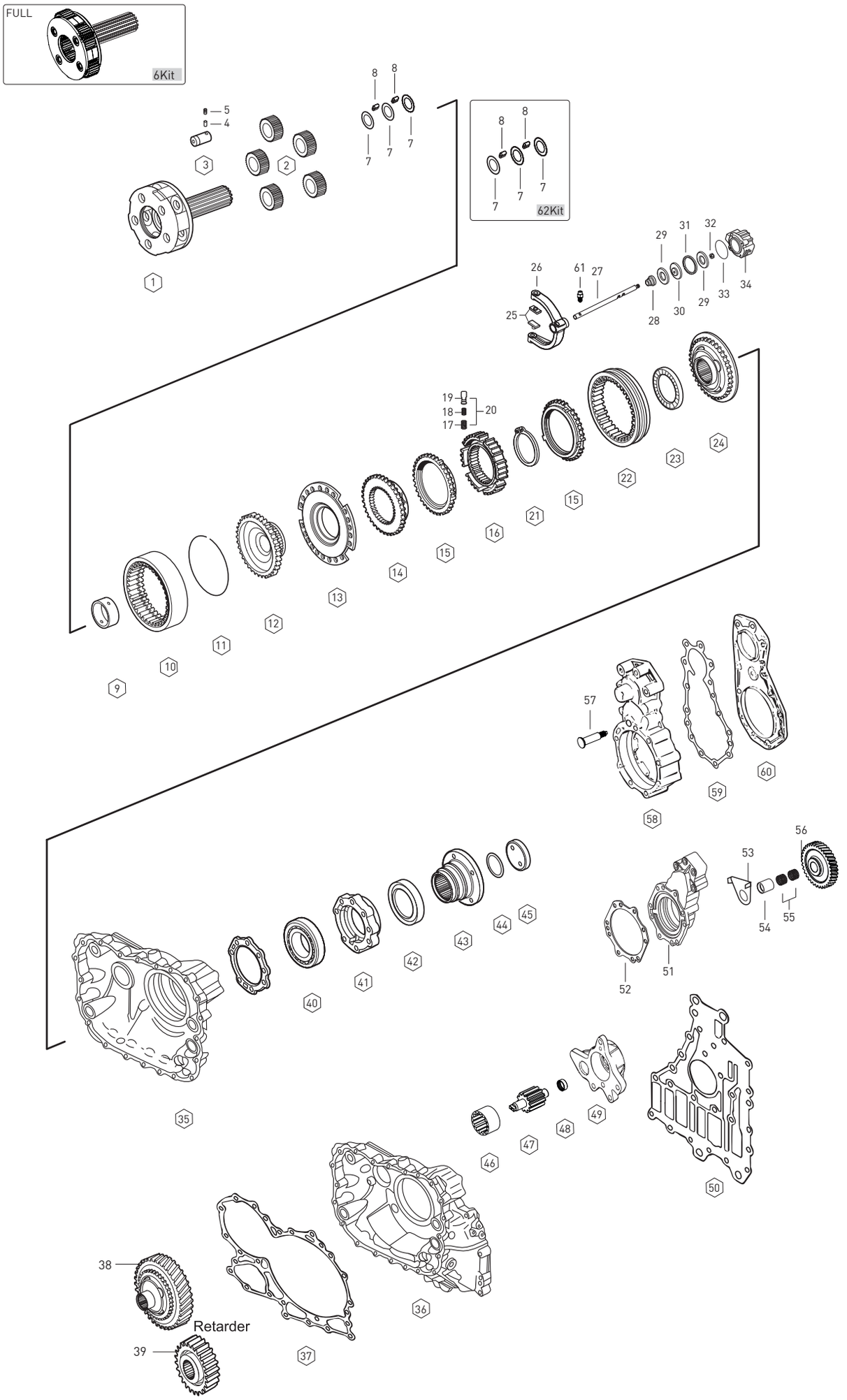

Original parts names, oem numbers, symbols and descriptions used in this catalogue are for reference purposes only.

Fig.	Kacmaz No.	Oem No	Oem Old No	Pcs.	Ürün Tanımı	Description	Sizes	(X1)	(X2)
1	K20.00645	1315 232 017	(1315 232 016)	1	ŞANZIMAN HEYKELİ (BOŞ)	PLANETARY CARRIER (EMPTY)		◆	
1	K20.00925	1315 232 027		1	ŞANZIMAN HEYKELİ (BOŞ)	PLANETARY CARRIER (EMPTY)	NEW		◆
2	K20.00156	1315 232 010		1	HEYKEL KOZA DİŞLİ TK. 28 DİŞ	PLANET.GEAR SET 28T		◆	◆
3	K20.00400	1315 332 053		5	HEYKEL KOZA DİŞLİ PİMİ	PLANET SHAFT		◆	
3	K20.00924	1315 332 091		5	HEYKEL KOZA DİŞLİ PİMİ	PLANET SHAFT	NEW		◆
4		0631 329 051		5	HEYKEL KOZA DİŞLİ PİM KİLİT PİM	LOCK PIN		◆	
4		0631 329 147		5	HEYKEL KOZA DİŞLİ PİM KİLİT PİMİ	LOCK PIN	NEW	◆	
5		0631 329 167		5	HEYKEL KOZA DİŞLİ PİM KİLİT PİM	LOCK PIN			◆
5		0631 329 261		5	HEYKEL KOZA DİŞLİ PİM KİLİT PİMİ	LOCK PIN	NEW		◆
6	K20.01062	1315 232 017		1	ŞANZIMAN HEYKELİ (DOLU)	PLANETARY CARRIER (FULL)		◆	
6	K20.01064	1315 232 027		1	ŞANZIMAN HEYKELİ (DOLU)	PLANETARY CARRIER (FULL)	NEW		◆
7	K20.01514	0730 107 168		15	HEYKEL KOZA DİŞLİ PULU	THRUST WASHER	1.00mm	◆	◆
8	K20.01454	0750 119 116		140	HEYKEL KOZA DİŞLİ TANE BİLYA	NEEDLE ROLLER	10X16.8mm	◆	◆
9	K20.01578	1316 333 014		1	ŞANZIMAN HEYKEL BURCU	BUSHING		◆	◆
10	K20.00646	1315 332 041		1	ÇEMBER DİŞLİ 82 DİŞ	RING WHEEL 82T		◆	◆
11	K20.01690	0730 513 583		1	ÇEMBER DİŞLİ SEGMANI	SPRING RING	3.20mm	◆	◆
12	K20.00647	1316 332 130	(1316 332 103)	1	PLANET ÇAN DİŞLİ	CARRIER HUB	H=91.00mm	◆	◆
13	K20.00220	1296 333 046	(1296 333 039)	1	PLEYT	PLATE		◆	◆
14	K20.00074	1296 333 050		1	AĞIR SERİ SENKROMENÇ	ENGAGING RING		◆	◆
15	K20.00038	1296 333 045	(1296 333 022)	2	AĞIR SERİ SENK.FRENLEME	SYNCHRONIZING CONE		◆	◆
			(0769 174 091)						
16	K20.00185	1313 333 001		1	AĞIR SERİ YILDIZ DİŞLİ	GUIDE SLEEVE		◆	◆
17	K20.00469	0732 040 385		9	AĞIR SERİ YILDIZ DİŞLİ YAYI	SPRING		◆	◆
18	K20.00470	0732 040 386		9	AĞIR SERİ YILDIZ DİŞLİ YAYI	SPRING		◆	◆
19	K20.00471	1240 304 278		9	AĞIR SERİ YILDIZ DİŞLİ FİŞEĞİ	PRESSURE PIECE		◆	◆
20	K20.00474	1295 298 933		kit	A.SERİ YILDIZ DİŞLİ YAY FİŞEK TK.	REPAIR KIT		◆	◆
21		0630 501 061		1	AĞIR SERİ YILDIZ DİŞLİ SEGMANI	RETAINING RING	125X4.00mm	◆	◆
22	K20.00039	1296 333 023	(0769 186 286)	1	AĞIR SERİ SENKROMENÇ HALKA	ENGAGING SLEEVE		◆	
22	K20.00831	1316 333 034		1	AĞIR SERİ SENKROMENÇ HALKA	ENGAGING SLEEVE	NEW		◆
23	K20.01332	0735 298 169		1	SERİ SENK.ALIN MAS.BİLYA	NEEDLE BEARING	104.50X128.40X10mm	◆	◆
24	K20.00158	1316 233 015		1	SERİ SENKROMENÇ	ENGAGING RING		◆	
24	K20.00896	1316 233 029	(1316 233 011)	1	SERİ SENKROMENÇ	ENGAGING RING	NEW		◆
25	K20.00341	1296 334 004		2	AĞIR SERİ HİLAL PABUCU	SLIDING PAD		◆	◆
26		1315 334 039		1	AĞIR SERİ HİLALİ	GEAR SHIFT FORK		◆	◆
27	K20.00648	1315 334 071	(1315 334 058)	1	AĞIR SERİ HİLAL MİLİ	GEAR SHIFT RAIL		◆	◆
28	K20.01026	0750 112 253	(0750 112 131)	1	AĞIR SERİ HİLAL MİL KEÇESİ	FLANGE PACKING	25.0X40.0X15.0mm	◆	◆
29	K20.01019	0734 307 294	(0734 307 280)	2	AĞIR SERİ HAVA KEÇESİ	SEALING RING		◆	◆
30	K20.01773	1315 334 034		1	AĞIR SERİ HİLAL MİL PİSTONU	PISTON		◆	◆
31	K20.01657	0750 112 066		1	AĞIR SERİ HİLAL MİL FİBERİ	GUIDE RING	85.1X90.0X5.4mm	◆	◆
32	K20.01774	0737 006 095		1	AĞIR SERİ HİLAL MİL SOMUNU	NUT	M16X1.5mm	◆	◆
33		0501317 536		1	A.SERİ SİLİNDİR ORİNGİ	O-RING		◆	◆

NOTES :
X1,X2 are used conjunction with the encoded parts.

X1 : 16 S 181 SG, 16 S 1920 TO, 16 S 1921 TO 16 S 1922 TO
16 S 1923 TO, 16 S 1925 TO 16 S 2021 TO, 16 S 2220 TO
16 S 2220 TO, 16 S 2221 TO, 16 S 2222 TO, 16 S 2223 TO, 16 S 2225 TO

X2 : 16 S 181 SG, 16 S 1920 TD, 16 S 1921 TD, 16 S 1922 TD
16 S 1923 TD, 16 S 1925 TD 16 S 2021 TD, 16 S 2220 TD
16 S 2220 TD, 16 S 2221 TD, 16 S 2222 TD, 16 S 2223 TD, 16 S 2225 TD

NOTLAR :
X1,X2 ile kodlanan parçalar birlikte kullanılır.

X1 : 16 S 181 SG, 16 S 1920 TO, 16 S 1921 TO 16 S 1922 TO
16 S 1923 TO, 16 S 1925 TO 16 S 2021 TO, 16 S 2220 TO
16 S 2220 TO, 16 S 2221 TO, 16 S 2222 TO, 16 S 2223 TO, 16 S 2225 TO

X2 : 16 S 181 SG, 16 S 1920 TD, 16 S 1921 TD, 16 S 1922 TD
16 S 1923 TD, 16 S 1925 TD 16 S 2021 TD, 16 S 2220 TD
16 S 2220 TD, 16 S 2221 TD, 16 S 2222 TD, 16 S 2223 TD, 16 S 2225 TD

Original parts names, oem numbers, symbols and descriptions used in this catalogue are for reference purposes only.

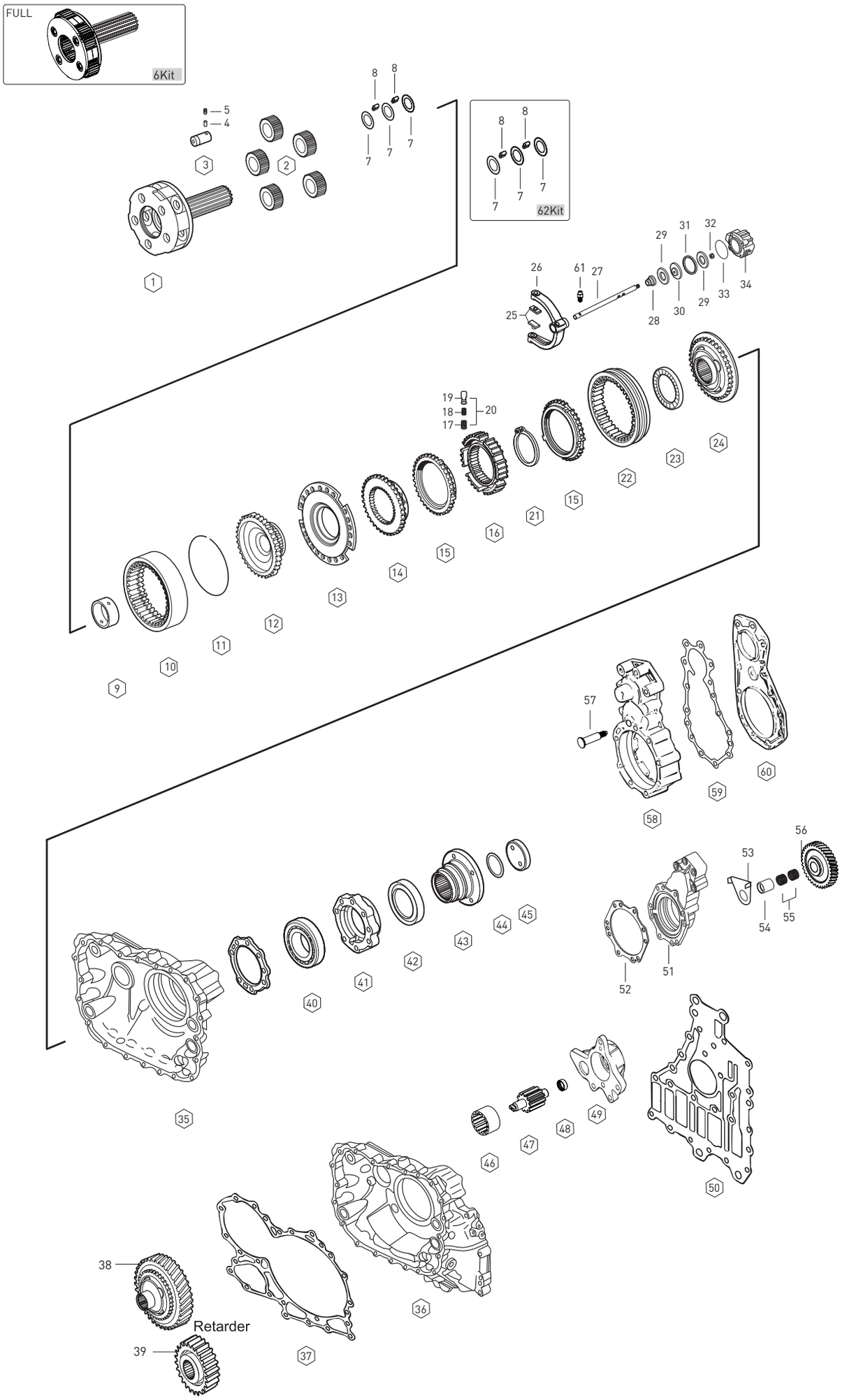

Original parts names, oem numbers, symbols and descriptions used in this catalogue are for reference purposes only.

Fig.	Kacmaz No.	Oem No	Oem Old No	Pcs.	Ürün Tanımı	Description	Sizes	(X1)	(X2)
34	K20.00842	1315 334 069	(1315 334 056)	1	AĞIR SERİ SİLİNDİR GÖVDESİ	CYLINDER		◆	◆
35		1315 201 224	(1315 301 223)	1	ŞANZIMAN ARKA GÖVDE	HOUSING		◆	◆
36		6085 201 079		1	ŞANZIMAN ARKA GÖVDE	HOUSING	RETARDER	◆	◆
37	K20.01733	0501 315 048	(0501 313 511)	1	ŞANZ.ARKA GÖVDE CONTASI	GASKET	RETARDER	◆	◆
38	K20.00403	1316 233 014		1	RETARDER DİŞLİSİ 59 DİŞ	GEAR 59 T	RETARDER	◆	
38	K20.00796	1316 233 028		1	RETARDER DİŞLİSİ 59 DİŞ	GEAR 59 T	NEW - RETARDER		◆
39	K20.00649	6085 301 012		1	RETARDER DİŞLİ KARŞILIĞI 29 DİŞ	GEAR 29 T	RETARDER	◆	◆
40	K20.01134	0750 116 394	(0750 116 002)	1	ŞANZIMAN ARKA BİLYA	ROLLER BEARING	90x160x30mm	◆	◆
			(0635 304 904)						
41		1315 231 004		1	ŞANZIMAN ARKA KEÇE KAPAĞI	COVER		◆	◆
42	K20.01013	0750 111 341		1	ŞANZIMAN ARKA KEÇE	OIL SEAL	105x130x12mm	◆	◆
42	K20.01022	0734 319 459	(0734 300 421)	1	ŞANZIMAN ARKA KEÇE	OIL SEAL	RETARDER	◆	◆
43	K20.00427	1297 333 110	(1315 333 048)	1	ŞANZIMAN FLANŞI	COMPANION FLANGE		◆	◆
44	K20.02113	0634 313 805		1	ŞANZIMAN FLANŞ ORİNGİ	O-RING	82x4mm	◆	◆
45	K20.01681	1312 332 028		1	ŞANZIMAN FLANŞ PULU	WASHER		◆	◆
46	K20.00804	6085 303 008		1	RETAR.POMPA DİŞLİSİ DIŞ ROTOR	RING GEAR		◆	◆
47	K20.00805	6085 203 001		1	RETAR.POMPA DİŞLİSİ İÇ ROTOR	SHAFT		◆	◆
48	K20.01472	0635 303 038		1	RETAR.POMPA MASURA BİLYA	NEEDLE CAGE		◆	◆
49	K20.00825	6085 303 011	(6085 403 011)	1	RETARDER POMPA GÖVDESİ	HOUSING		◆	◆
50	K20.02058	0501 314 434		1	RETARDER CONTASI	GASKET		◆	◆
51	K20.02080	6091 315 009		1	PTO KAPAĞI	COVER PTO		◆	◆
52		0501 331 906		1	PTO KAPAK CONTASI	GASKET		◆	◆
53	K20.02076	1304 313 058		1	GEZİNTİ PULU SACI	WASHER		◆	◆
54	K20.02170	0735 295 067		1	DİREKSİYON POMPA DİŞLİ BURCU	BUSHING		◆	◆
55	K20.01469	0735 320 885		2	DİREK.POMPA DİŞLİ MAS.BİLYA	NEEDLE CAGE		◆	◆
56		1304 313 063		1	DİREKSİYON POMPA DİŞLİSİ	IDLER GEAR		◆	◆
57	K20.01067	1304 313 057		1	DİREKSİYON POMPA PİMİ	PIN		◆	◆
58	K20.01823	6091 316 004		1	DİREKSİYON POMPA GÖVDESİ	HOUSING		◆	◆
59	K20.02145	1295 338 145		1	DİREK.POMPA GÖVDE CONTASI	GASKET		◆	◆
60	K20.01962	6091 303 018	(1295 338 091)	1	DİREK.POMPA GÖVDE KAPAĞI	COVER		◆	◆
61	K20.00838	1324 207 035	(1313 207 005)	1	İSTİNATLAMA FİŞEĞİ	DETENT PLUNGER	145 N	◆	◆
			(1313 207 001)						
62	K20.01744	2001744		kit	ŞANZ.HEYKELİ BİLYA VE PUL TK.	REPAIR KIT		◆	◆

NOTES :

X1,X2 are used conjunction with the encoded parts.

X1 : 16 S 181 SG, 16 S 1920 TO, 16 S 1921 TO 16 S 1922 TO
16 S 1923 TO, 16 S 1925 TO 16 S 2021 TO, 16 S 2220 TO
16 S 2220 TO, 16 S 2221 TO, 16 S 2222 TO, 16 S 2223 TO, 16 S 2225 TO

X2 : 16 S 181 SG, 16 S 1920 TD, 16 S 1921 TD, 16 S 1922 TD
16 S 1923 TD, 16 S 1925 TD 16 S 2021 TD, 16 S 2220 TD
16 S 2220 TD, 16 S 2221 TD, 16 S 2222 TD, 16 S 2223 TD, 16 S 2225 TD

NOTLAR :

X1,X2 ile kodlanan parçalar birlikte kullanılır.

X1 : 16 S 181 SG, 16 S 1920 TO, 16 S 1921 TO 16 S 1922 TO
16 S 1923 TO, 16 S 1925 TO 16 S 2021 TO, 16 S 2220 TO
16 S 2220 TO, 16 S 2221 TO, 16 S 2222 TO, 16 S 2223 TO, 16 S 2225 TO

X2 : 16 S 181 SG, 16 S 1920 TD, 16 S 1921 TD, 16 S 1922 TD
16 S 1923 TD, 16 S 1925 TD 16 S 2021 TD, 16 S 2220 TD
16 S 2220 TD, 16 S 2221 TD, 16 S 2222 TD, 16 S 2223 TD, 16 S 2225 TD

Original parts names, oem numbers, symbols and descriptions used in this catalogue are for reference purposes only.

SYNCHRONIZER KIT CONST.

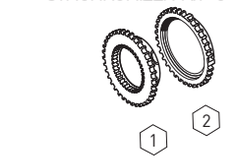

Fig.	Kacmaz No.	Oem No	Oem Old No	Pcs.	Ürün Tanımı	Description
	K20.00523	1312 204 031		Kit	TAKVİYE SENK.KİT	SYNCH.KIT Const.
1	K20.00101	1312 304 027		1	TAKVİYE SENKROMENÇ	ENGAGING RING
2	K20.00108	1297 304 484	(1297 304 402)	1	TAKVİYE FRENLEME	SYNCHRONIZING CONE

SYNCHRONIZER KIT CONST.

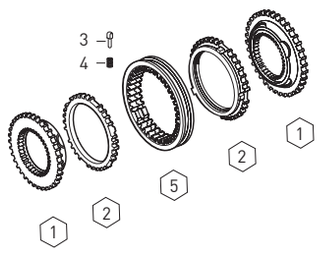

Fig.	Kacmaz No.	Oem No	Oem Old No	Pcs.	Ürün Tanımı	Description
	K20.00524	1315 298 030		Kit	TAKVİYE SENKROMENÇ KİT	SYNCH.KIT Const.
1	K20.00101	1312 304 027		2	TAKVİYE SENKROMENÇ	ENGAGING RING
2	K20.00108	1297 304 484	(1297 304 402)	2	TAKVİYE SENK.FRENLEME	SYNCHRONIZING CONE
3	K20.00111	1297 304 436		3	TAK.YILDIZ DİŞLİ FİŞEĞİ	PRESSURE PIECE
4	K20.00110	0732 040 409		3	TAKVİYE YILDIZ DİŞLİ YAYI	SPRING
5	K20.00098	1310 304 202	(1312 302 057)	1	TAKVİYE SENK.HALKA	ENGAGING SLEEVE
			(1310 304 174)			

SYNCHRONIZER KIT 3rd/4th

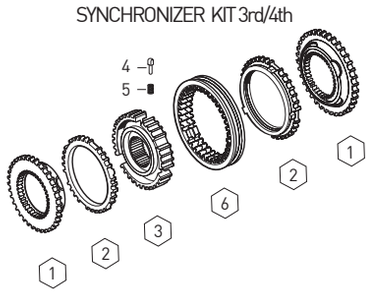

Fig.	Kacmaz No.	Oem No	Oem Old No	Pcs.	Ürün Tanımı	Description
	K20.00088	1315 298 061		kit	3./4.VİT.SENKROMENÇ KİT	SYNCH.KIT 3rd/4th
1	K20.00102	1316 304 159	(1316 304 145)	2	3./4.VİT.SENKROMENÇ	ENGAGING RING
2	K20.00109	1316 304 168	(1316 304 149)	2	3./4.VİT.SENK.FRENLEME	SYNCHRONIZING CONE
3	K20.00136	1316 304 162		1	3./4.VİT.YILDIZ DİŞLİ	GUIDE SLEEVE
4	K20.00111	1297 304 436		3	3./4.VİT.YILDIZ DİŞLİ FİŞEĞİ	PRESSURE PIECE
5	K20.00110	0732 040 409		3	3./4.VİT.YILDIZ DİŞLİ YAYI	SPRING
6	K20.00103	1316 304 167	(1315 304 135)	1	3./4.VİT.SENK.HALKA	ENGAGING SLEEVE

SYNCHRONIZER KIT 3rd/4th

Fig.	Kacmaz No.	Oem No	Oem Old No	Pcs.	Ürün Tanımı	Description
	K20.00794	1316 204 016	(1316 204 014)	kit	3./4.VİT.FRENLEME KİTİ	SYNCH.KIT 3rd/4th
1	K20.00109	1316 304 168	(1316 304 149)	2	3./4.VİT.SENK.FRENLEME	SYNCHRONIZING CONE
2	K20.00136	1316 304 162		1	3./4.VİT.YILDIZ DİŞLİ	GUIDE SLEEVE
3	K20.00111	1297 304 436		3	3./4.VİT.YILDIZ DİŞLİ FİŞEĞİ	PRESSURE PIECE
4	K20.00110	0732 040 409		3	3./4.VİT.YILDIZ DİŞLİ YAYI	SPRING
5	K20.00103	1316 304 167	(1315 304 135)	1	3./4.VİT.SENK.HALKA	ENGAGING SLEEVE

SYNCHRONIZER KIT 3rd/4th

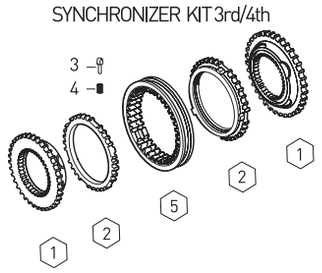

Fig.	Kacmaz No.	Oem No	Oem Old No	Pcs.	Ürün Tanımı	Description
	K20.00879	1325 298 008		Kit	3./4.VİT.FRENLEME KİTİ	SYNCH.KIT 3rd/4th
1	K20.00881	1316 304 190		2	3./4.VİT.SENKROMENÇ	ENGAGING RING
2	K20.00880	1316 304 189		2	3./4.VİT.SENK.FRENLEME	SYNCHRONIZING CONE
3	K20.00111	1297 304 436		3	PRİZ.YILDIZ DİŞLİ FİŞEĞİ	PRESSURE PIECE
4	K20.00110	0732 040 409		3	PRİZ.YILDIZ DİŞLİ YAYI	SPRING
5	K20.00871	1356 304 023	(1316 304 188)	1	3./4.VİT. SENK.HALKA	ENGAGING SLEEVE

SYNCHRONIZER KIT 3rd/4th

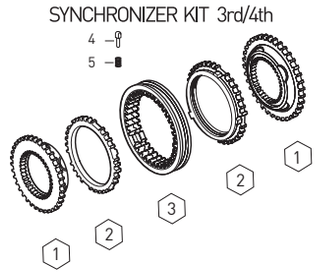

Fig.	Kacmaz No.	Oem No	Oem Old No	Pcs.	Ürün Tanımı	Description
	K20.00894	1315 298 067		Kit	3./4.VİT.SENKROMENÇ KİT	SYNCH.KIT 3rd/4th
1	K20.00102	1316 304 159	(1316 304 145)	2	3./4.VİT.SENKROMENÇ	ENGAGING RING
2	K20.00109	1316 304 168	(1316 304 149)	2	3./4.VİT.SENK.FRENLEME	SYNCH.CONE
3	K20.00103	1316 304 167	(1315 304 135)	1	3./4.VİT.SENK.HALKA	ENGAGING SLEEVE
4	K20.00111	1297 304 436		3	3./4.VİT.YILDIZ DİŞLİ FİŞEĞİ	PRESSURE PIECE
5	K20.00110	0732 040 409		3	3./4.VİT.YILDIZ DİŞLİ YAYI	SPRING

SYNCHRONIZER KIT 3rd/4th

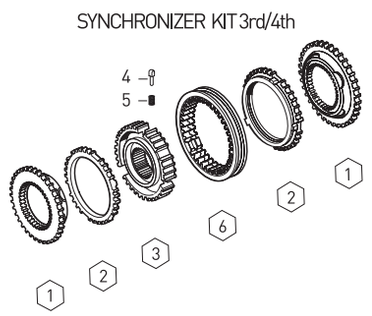

Fig.	Kacmaz No.	Oem No	Oem Old No	Pcs.	Ürün Tanımı	Description
	K20.01794	1356 204 006		Kit	3./4.VİT.SENKROMENÇ KİT	SYNCH.KIT 3rd/4th
1	K20.00881	1316 304 190		2	3./4.VİT.SENKROMENÇ	ENGAGING RING
2	K20.00880	1316 304 189		2	3./4.VİT.SENK.FRENLEME	SYNCH.CONE
3	K20.00898	1356 304 019		1	3./4.VİT.YILDIZ DİŞLİ	GUIDE SLEEVE
4	K20.00111	1297 304 436		3	3./4.VİT.YILDIZ DİŞLİ FİŞEĞİ	PRESSURE PIECE
5	K20.00110	0732 040 409		3	3./4.VİT.YILDIZ DİŞLİ YAYI	SPRING
6	K20.00871	1356 304 023	(1316 304 188)	1	3./4.VİT.SENK.HALKA	ENGAGING SLEEVE

Original parts names, oem numbers, symbols and descriptions used in this catalogue are for reference purposes only.

Fig.	Kacmaz No.	Oem No	Oem Old No	Pcs.	Ürün Tanımı	Description
	K20.00893	1315 298 066		Kit	1./2.VİT.SENKROMENÇ KİT	SYNCH.KIT 1st/2nd
1	K20.00183	1316 304 156		2	1./2.VİT.SENKROMENÇ	ENGAGING RING
2	K20.00113	1316 304 170	(1316 304 150)	2	1./2.VİT.FRENLEME	SYNCH.CONE
3	K20.00114	1316 304 169	(1315 304 136)	1	1./2.VİT.SENK.HALKA	ENGAGING SLEEVE
4	K20.00111	1297 304 436		3	1./2.VİT.YILDIZ DİŞLİ FİŞEĞİ	PRESSURE PIECE
5	K20.00110	0732 040 409		3	1./2.VİT.YILDIZ DİŞLİ YAYI	SPRING

SYNCHRONIZER KIT 1st/2nd

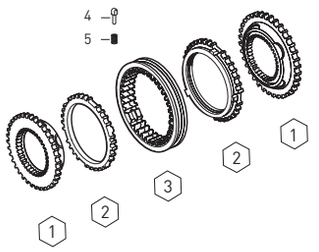

Fig.	Kacmaz No.	Oem No	Oem Old No	Pcs.	Ürün Tanımı	Description
	K20.00087	1315 298 060	(1316 204 017)	Kit	1./2.VİT.SENKROMENÇ KİT	SYNCH.KIT 1st/2nd
1	K20.00183	1316 304 156		2	1./2.VİT.SENKROMENÇ	ENGAGING RING
2	K20.00113	1316 304 170	(1316 304 150)	2	1./2.VİT.FRENLEME	SYNCH.CONE
3	K20.00180	1316 304 163		1	1./2.VİT.YILDIZ DİŞLİ	GUIDE SLEEVE
4	K20.00111	1297 304 436		3	1./2.VİT.YILDIZ DİŞLİ FİŞEĞİ	PRESSURE PIECE
5	K20.00110	0732 040 409		3	1./2.VİT.YILDIZ DİŞLİ YAYI	SPRING
6	K20.00114	1316 304 169	(1315 304 136)	1	1./2.VİT.SENK.HALKA	ENGAGING SLEEVE

SYNCHRONIZER KIT 1st/2nd

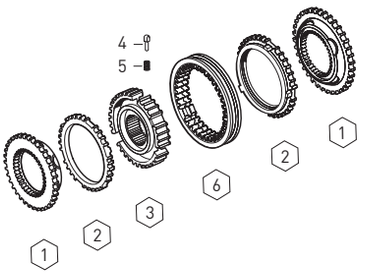

Fig.	Kacmaz No.	Oem No	Oem Old No	Pcs.	Ürün Tanımı	Description
	K20.00482	1315 204 006	(1312 298 911)	Kit	1./2.VİT.SENKROMENÇ KİT	SYNCH.KIT 1st/2nd
1	K20.00143	1312 304 106		2	1./ 2.VİT.SENKROMENÇ	ENGAGING RING
2	K20.00144	1268 304 424		2	1./ 2.VİT.SENK.FRENLEME	SYNCHRONIZING CONE
3	K20.00302	1268 304 494	(1268 304 491)	2	1./ 2.VİT.SENK.FRENLEME	INTERMEDIATE CONE
4	K20.00145	1268 304 525		2	1./ 2.VİT.SENK.FRENLEME	SYNCHRONIZING CONE
5	K20.00146	1312 304 158		1	1./ 2.VİT.YILDIZ DİŞLİ	GUIDE SLEEVE
6	K20.00209	1312 304 159		3	1./ 2.VİT.YIL.DİŞLİ BAKLASI	SLIDING BLOCK
7	K20.00111	1297 304 436		3	PRİZ.veYILDIZ DİŞLİ FİŞEĞİ	PRESSURE PIECE
8	K20.00110	0732 040 409		3	PRİZ.ve YILDIZ DİŞLİ YAYI	SPRING
9	K20.00147	1310 304 175	(1312 304 157)	1	1./ 2.VİT.SENK.HALKA	ENGAGING SLEEVE

SYNCHRONIZER KIT 1st/2nd

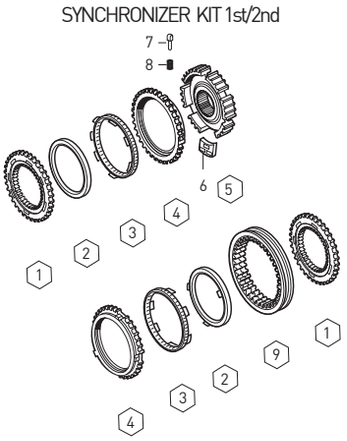

Fig.	Kacmaz No.	Oem No	Oem Old No	Pcs.	Ürün Tanımı	Description
	K20.00532	1315 233 029		Kit	AĞIR SERİ SENK.KİT	SYNCHRONIZER KIT
1	K20.00038	1296 333 045	(1296 333 022)	2	AĞIR SERİ FRENLEME	SYNCHRONIZING CONE
2	K20.00185	1313 333 001		1	AĞIR SERİ YILDIZ DİŞLİ	GUIDE SLEEVE
3	K20.00469	0732 040 385		9	AĞIR SERİ YILDIZ DİŞLİ YAYI	SPRING
4	K20.00470	0732 040 386		9	AĞIR SERİ YILDIZ DİŞLİ YAYI	SPRING
5	K20.00471	1240 304 278		9	AĞIR SERİ YILDIZ DİŞ.FİŞEĞİ	PRESSURE PIECE
6	K20.00039	1296 333 023		1	AĞIR SERİ SENK.HALKA	ENGAGING SLEEVE

SYNCHRONIZER KIT PLANETARY

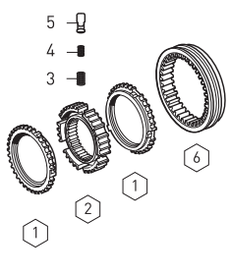

Fig.	Kacmaz No.	Oem No	Oem Old No	Pcs.	Ürün Tanımı	Description
	K20.00546	1315 298 034		Kit	AĞIR SERİ SENK.KİT	SYNCHRONIZER KIT
1	K20.00074	1296 333 050		1	AĞIR SERİ SENKROMENÇ	ENGAGING RING
2	K20.00038	1296 333 045	(1296 333 022)	2	AĞIR SERİ FRENLEME	SYNCHRONIZING CONE
3	K20.00469	0732 040 385		9	AĞIR SERİ YILDIZ DİŞLİ YAYI	SPRING
4	K20.00470	0732 040 386		9	AĞIR SERİ YILDIZ DİŞLİ YAYI	SPRING
5	K20.00471	1240 304 278		9	AĞIR SERİ YILDIZ DİŞ.FİŞEĞİ	PRESSURE PIECE
6	K20.00039	1296 333 023		1	AĞIR SERİ SENK.HALKA	ENGAGING SLEEVE
7	K20.00158	1316 233 015		1	SERİ SENKROMENÇ	ENGAGING RING

SYNCHRONIZER KIT PLANETARY

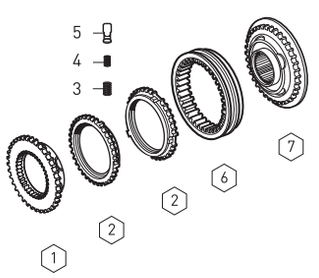

Original parts names, oem numbers, symbols and descriptions used in this catalogue are for reference purposes only.

SYNCHRONIZER KIT PLANETARY

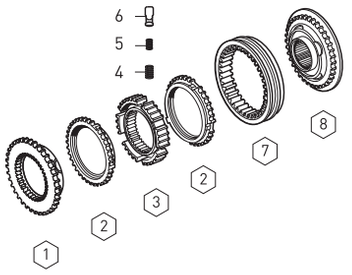

Fig.	Kacmaz No.	Oem No	Oem Old No	Pcs.	Ürün Tanımı	Description
	K20.00545	1315 298 029		Kit	AĞIR SERİ SENK.KİT	SYNCHRONIZER KIT
1	K20.00074	1296 333 050		1	AĞIR SERİ SENKROMENÇ	ENGAGING RING
2	K20.00038	1296 333 045	(1296 333 022)	2	AĞIR SERİ FRENLEME	SYNCHRONIZING CONE
3	K20.00185	1313 333 001		1	AĞIR SERİ YILDIZ DİŞLİ	GUIDE SLEEVE
4	K20.00469	0732 040 385		9	AĞIR SERİ YILDIZ DİŞLİ YAYI	SPRING
5	K20.00470	0732 040 386		9	AĞIR SERİ YILDIZ DİŞLİ YAYI	SPRING
6	K20.00471	1240 304 278		9	AĞIR SERİ YILDIZ DİŞ.FİŞEĞİ	PRESSURE PIECE
7	K20.00039	1296 333 023		1	AĞIR SERİ SENK.HALKA	ENGAGING SLEEVE
8	K20.00158	1316 233 015		1	SERİ SENKROMENÇ	ENGAGING RING

SYNCHRONIZER KIT PLANETARY

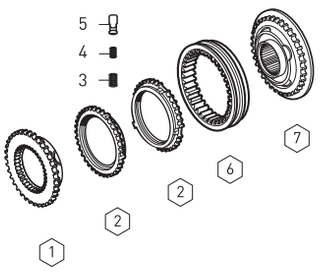

Fig.	Kacmaz No.	Oem No	Oem Old No	Pcs.	Ürün Tanımı	Description
	K20.00906	2000906		Kit	AĞIR SERİ SENK.KİT	SYNCHRONIZER KIT
1	K20.00074	1296 333 050		1	AĞIR SERİ SENKROMENÇ	ENGAGING RING
2	K20.00038	1296 333 045	(1296 333 022)	2	AĞIR SERİ FRENLEME	SYNCHRONIZING CONE
3	K20.00469	0732 040 385		9	AĞIR SERİ YILDIZ DİŞLİ YAYI	SPRING
4	K20.00470	0732 040 386		9	AĞIR SERİ YILDIZ DİŞLİ YAYI	SPRING
5	K20.00471	1240 304 278		9	AĞIR SERİ YILDIZ DİŞ.FİŞEĞİ	PRESSURE PIECE
6	K20.00831	1316 333 034		1	AĞIR SERİ SENK.HALKA	ENGAGING SLEEVE
7	K20.00896	1316 233 011	(1316 233 029)	1	SERİ SENKROMENÇ	ENGAGING RING

SYNCHRONIZER KIT PLANETARY

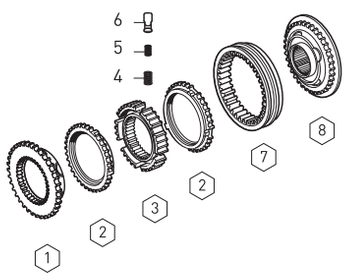

Fig.	Kacmaz No.	Oem No	Oem Old No	Pcs.	Ürün Tanımı	Description
	K20.00907	2000907		Kit	AĞIR SERİ SENK.KİT	SYNCHRONIZER KIT
1	K20.00074	1296 333 050		1	AĞIR SERİ SENKROMENÇ	ENGAGING RING
2	K20.00038	1296 333 045	(1296 333 022)	2	AĞIR SERİ FRENLEME	SYNCHRONIZING CONE
3	K20.00185	1313 333 001		1	AĞIR SERİ YILDIZ DİŞLİ	GUIDE SLEEVE
4	K20.00469	0732 040 385		9	AĞIR SERİ YILDIZ DİŞLİ YAYI	SPRING
5	K20.00470	0732 040 386		9	AĞIR SERİ YILDIZ DİŞLİ YAYI	SPRING
6	K20.00471	1240 304 278		9	AĞIR SERİ YILDIZ DİŞ.FİŞEĞİ	PRESSURE PIECE
7	K20.00831	1316 333 034		1	AĞIR SERİ SENK.HALKA	ENGAGING SLEEVE
8	K20.00896	1316 233 011	(1316 233 029)	1	SERİ SENKROMENÇ	ENGAGING RING

P.T.O. (POWER TAKE OFF)

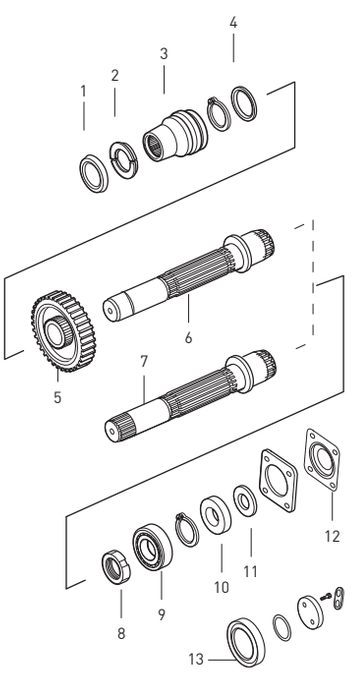

Fig.	Kacmaz No.	Oem No	Oem Old No	Pcs.	Ürün Tanımı	Description
1		1296 313 131		1	P.KİLİT EMNİYET SACI	RETAINING RING
2		0730 104 627		1	PARÇALI KİLİT	SPLIT RING
3		1296 313 238		1	PTO MİL KOVANI	SLIDING SLEEVE
4		0730 104 628		1	PTO DİŞLİ AYAR PULU	THRUST WASHER
5		1296 313 082		1	PTO DİŞLİ	GEAR 33 T
5		1296 313 083		1	PTO DİŞLİ	GEAR 36 T
5		1296 313 084		1	PTO DİŞLİ	GEAR 38 T
5		1296 313 085		1	PTO DİŞLİ	GEAR 39 T
5		1296 313 086		1	PTO DİŞLİ	GEAR 46 T
6	K20.00556	1296 213 028		1	PTO MİLİ DÜZ	INTERM.SHAFT
7	K20.00555	1296 213 028		1	PTO MİLİ FREZELİ	INTERM.SHAFT (Milled)
8		1296 313 125		1	PTO MİL SOMUNU	NUT
9		0735 410 139		1	PTO MİL BİLYASI	ROLLER BEARING
10		7429 032 102		1	PTO BİLYA KAPAK PULU	THRUST WASHER
11		1232 304 062		1	PTO BİLYA KAPAK RAYNELİ	SHIM (1.00mm)
11		1232 304 063		1	PTO BİLYA KAPAK RAYNELİ	SHIM (0.90mm)
11		1232 304 072		1	PTO BİLYA KAPAK RAYNELİ	SHIM (0.70mm)
12		1250 313 190		1	PTO BAĞLANTI KAPAĞI	COVER
13	K20.01013	0750 111 341		1	ŞANZ.ARKA KAPAK KEÇESİ	OIL SEAL

Original parts names, oem numbers, symbols and descriptions used in this catalogue are for reference purposes only.

GEARBOX GASKET KIT

Fig.	Kacmaz No.	Oem No	Oem Old No	Pcs.	Ürün Tanımı	Description
1	K20.01585	1315 298 001		Kit	ŞANZIMAN CONTA TAKIMI	GASKET KIT
2		1315 301 233		1	ŞANZ.ÖN GÖVDE CONTASI	GASKET
3		0501 314 246		1	PRİZ.KEÇE KAPAK CONTASI	GASKET
3		0501 314 587		1	PRİZ.KEÇE KAPAK CONTASI	GASKET
4		1316 301 042		2	ŞANZ.ARKA GÖVDE CONTASI	GASKET
4		1315 301 007		2	ŞANZ.ARKA GÖVDE CONTASI	GASKET
5		0501 318 308		2	ŞANZ.KULE KAPAK CONTASI	GASKET
6		1315 307 012		1	ŞANZ.KULESİ GÖVDE CONTASI	GASKET
7		1315 307 013		1	ŞANZ.KULE ALT KAPAK CONTASI	GASKET
8		0501 317 240		1	ŞANZ.KULE ÜST KAPAK CONTASI	GASKET
9		1315 331 001		1	ŞANZ.BİLYA KAPAK CONTASI	GASKET
10	K20.02108	1238 308 201		1	PTO BAĞLANTI KAPAK CONTASI	GASKET
11		0501 316 146		1	ŞANZ.DAMPER CONTASI	GASKET
11		1315 301 234		1	ŞANZ.DAMPER CONTASI	GASKET
12		1316 301 022		1	ŞANZ.MÜŞÜR KAPAK CONTASI	GASKET
13		1315 303 060		1	YAĞ POMPA CONTASI	GASKET
14		1315 307 242		1	SERVO KULE PİSTON CONTASI	GASKET

GEARBOX GASKET KIT

Fig.	Kacmaz No.	Oem No	Oem Old No	Pcs.	Ürün Tanımı	Description	Sizes
	K20.01039	1315 298 002		Kit	KEÇE TAKIMI	SEAL KIT	
1	K20.01037	0634 300 302	(0734 300 196)	1	KEÇE	OIL SEAL	25X35X7mm
2	K20.01036	0634 307 367		1	KEÇE	OIL SEAL	25X35X7/10mm
3	K20.01008	0734 310 104		1	PRİZDİREK KEÇESİ	OIL SEAL	52X68X8mm
4	K20.01034	0501 312 738	(0501 325 918)	4	KEÇE	OIL SEAL	30X37X4mm
5	K20.01035	0634 300 020		1	KEÇE	OIL SEAL	25X32X5mm
6	K20.01003	0734 310 387	(0734 310 311)	1	PRİZDİREK KEÇESİ	OIL SEAL	55X75X8mm
7	K20.01038	0734 309 765	(0734 309 376)	1	KEÇE	OIL SEAL	28X42X11mm
8	K20.01013	0750 111 341	(0734 319 551)	1	ŞANZ.FLANŞ KEÇESİ	OIL SEAL	105X130X12mm

GEARBOX GASKET KIT

Fig.	Kacmaz No.	Oem No	Oem Old No	Pcs.	Ürün Tanımı	Description	Sizes
	K20.01044	1315 298 003		kit	KEÇE TAKIMI	SEAL KIT	
1	K20.01016	0750 112 034		2	TAK.HİLAL MİL KEÇESİ	OIL SEAL	25X38X14.2mm
2	K20.01026	0750 112 131		2	HİLAL MİL KEÇESİ	OIL SEAL	25X40X15mm
3	K20.01019	0734 307 294	(0734 307 280)	2	A.SERİ HAVA KEÇESİ	OIL SEAL	50X91X7.5mm
4	K20.01024	0734 317 150	(0750 112 019)	2	A.SERİ HAVA KEÇESİ	OIL SEAL	80X90X4.8mm
5	K20.01779	0501 324 670		1	TAK.SİLİNDİR PİSTONU	PISTON	
6	K20.01657	0750 112 066	(0501 307 769)	1	A.SERİ HİLAL MİL FİBERİ	RING	85X90X5.5mm
7	K20.01020	0750 112 177		1	SİLİNDİR HAVA KEÇESİ	OIL SEAL	55X63X9.4mm
8		0634 801 062		12	ALM.PUL	SEAL RING	18X24X1.4mm
9		0634 801 097		1	ALM.PUL	WASHER	30X36mm
10		0634 801 173		5	ALM.PUL	WASHER	22X27mm
11		0634 801 203		1	ALM.PUL	SEAL RING	16X22X1.4mm
12		0634 801 206		5	ALM.PUL	SEAL RING	24X29mm
13		0634 801 219		2	ALM.PUL	SEAL RING	16X22X1.4mm
14		0634 801 249		1	ALM.PUL	SEAL RING	
15		0634 801 321		1	ALM.PUL	WASHER	
16		0730 008 055		1	ALM.PUL	WASHER	
17		0730 008 056		1	ALM.PUL	WASHER	
18		0730 008 057		8	ALM.PUL	WASHER	
19		0734 303 046		1	ORİNG	O-RING	
20		0634 314 020		4	ORİNG	O-RING	
21		0634 313 198		1	ORİNG	O-RING	
22		0634 313 293		1	ORİNG	O-RING	
23		0634 313 320		1	ORİNG	O-RING	
24		0634 313 018		1	ORİNG	O-RING	
25		0634 313 505		1	ORİNG	O-RING	
26		0634 314 015		1	ORİNG	O-RING	
27	K20.02113	0634 313 805		1	ORİNG	O-RING	
28		0634 314 021		2	ORİNG	O-RING	
29		0634 312 523		1	LASTİK KEÇE	RING	
30		0501 317 536		1	KANALLI ORİNG	RING	

Original parts names, oem numbers, symbols and descriptions used in this catalogue are for reference purposes only.

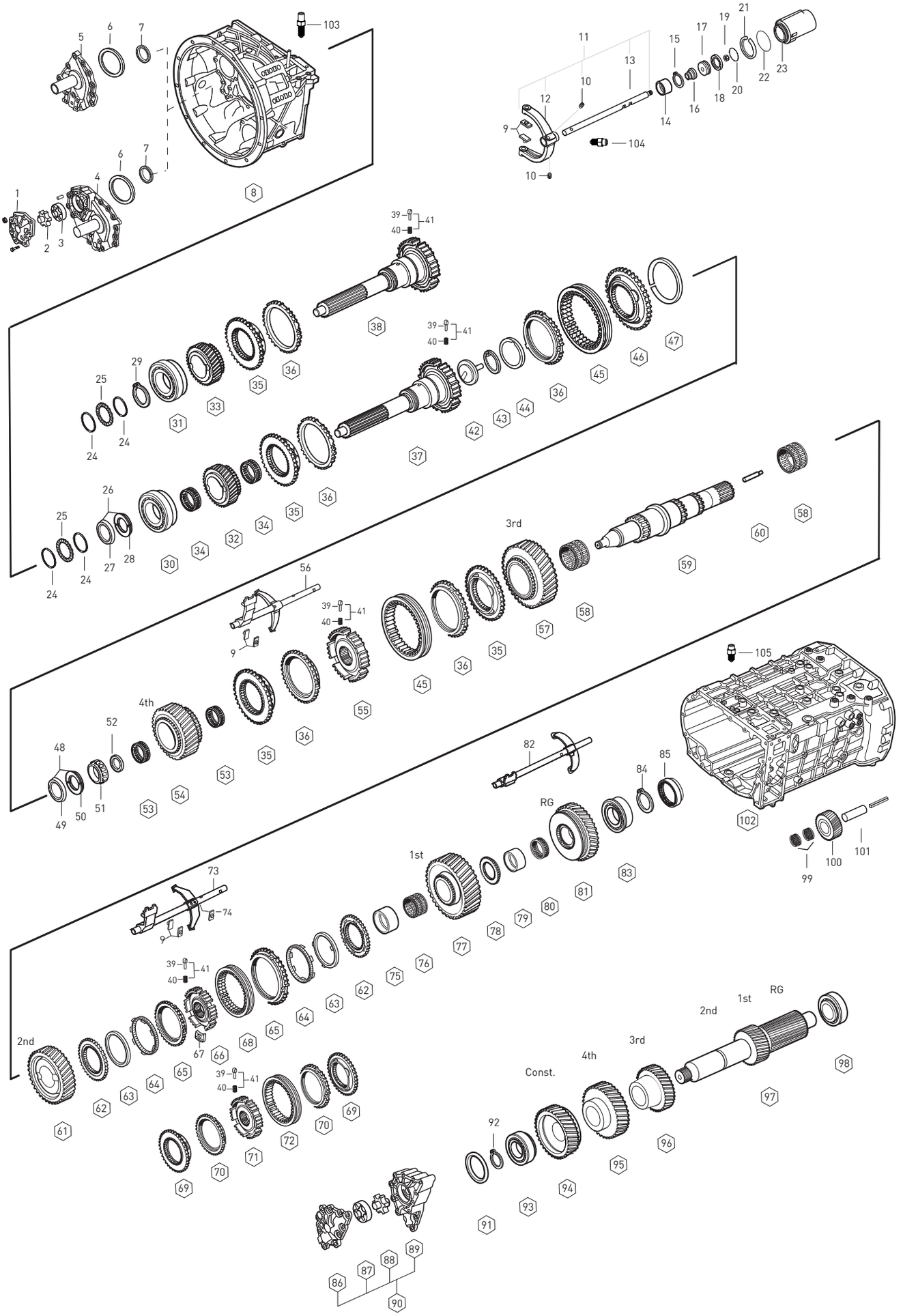

Original parts names, oem numbers, symbols and descriptions used in this catalogue are for reference purposes only.

Fig.	Kacmaz No.	Oem No	Oem Old No	Pcs.	Ürün Tanımı	Description	Sizes	Notes	X1).SG 13.85-0.84	X2).DG 16.53-1.00	X3).SG 13.85-0.84
1		1315 302 013		1	YAĞ POMPA KAPAĞI	COVER			◆	◆	◆
2	K20.00541	1315 202 014		1	YAĞ POMPA İÇ ROTOR	OIL PUMP GEAR			◆	◆	◆
3	K20.00543	1315 303 027		1	YAĞ POMPA DIŞ ROTOR	ROTOR			◆	◆	◆
4		1315 302 045		1	PRİZDİREK KEÇE KAPAĞI	COVER		(M)	◆	◆	◆
4		1315 302 044		1	PRİZDİREK KEÇE KAPAĞI	COVER		( )	◆	◆	◆
4		1315 302 057		1	PRİZDİREK KEÇE KAPAĞI	COVER		(M)	◆	◆	◆
4		1315 302 113		1	PRİZDİREK KEÇE KAPAĞI	COVER			◆	◆	◆
5	K20.00560	1315 302 136	(1315 402 136)	1	PRİZDİREK KEÇE KAPAĞI	COVER		(M)(R)	◆	◆	◆
5	K20.00559	1315 302 075	(1315 402 075)	1	PRİZDİREK KEÇE KAPAĞI	COVER		(D)	◆	◆	◆
6	K20.01683	0730 007 486		1	PRİZ.ÖN BİLYA RAYNELİ	SHIM	2.00mm		◆	◆	◆
6	K20.01684	0730 007 483		1	PRİZ.ÖN BİLYA RAYNELİ	SHIM	1.85mm		◆	◆	◆
6	K20.01685	0730 007 479		1	PRİZ.ÖN BİLYA RAYNELİ	SHIM	1.65mm		◆	◆	◆
6	K20.01686	0730 007 136		1	PRİZ.ÖN BİLYA RAYNELİ	SHIM	1.60mm		◆	◆	◆
6	K20.01687	0730 007 129		1	PRİZ.ÖN BİLYA RAYNELİ	SHIM	1.25mm		◆	◆	◆
6	K20.01668	0730 005 748		1	PRİZ.ÖN BİLYA RAYNELİ	SHIM	0.90mm		◆	◆	◆
6	K20.01671	2050 309 067		1	PRİZ.ÖN BİLYA RAYNELİ	SHIM	0.30mm		◆	◆	◆
6	K20.01582	0730 005 747		1	PRİZ.ÖN BİLYA RAYNELİ	SHIM	0.25mm		◆	◆	◆
6	K20.01672	2050 309 068		1	PRİZ.ÖN BİLYA RAYNELİ	SHIM	0.20mm		◆	◆	◆
6	K20.01673	2001673		1	PRİZ.ÖN BİLYA RAYNELİ	SHIM	0.10mm		◆	◆	◆
7	K20.01003	0734 310 386	(0734 310 387)	1	PRİZDİREK ÖN KEÇESİ	OIL SEAL	55x75x8mm		◆	◆	◆
8		1315 201 033		1	ŞANZIMAN ÖN GÖVDE	HOUSING			◆	◆	
8		1316 201 142		1	ŞANZIMAN ÖN GÖVDE	HOUSING					◆
8		1316 201 149		1	ŞANZIMAN ÖN GÖVDE	HOUSING					◆
9	K20.00204	1297 306 120		6	TAK-1-2-3-4.VİT.HİL.PABUCU	SLIDING PAD			◆	◆	◆
10	K20.01688	1315 312 047		2	TAK.HİLAL VİDASI	SCREW	M12x1.00mm		◆	◆	◆
11		1316 212 008		1	TAKVİYE HİLALİ KOMPLE	G.S.FORK and RAIL ASSY.			◆	◆	◆
12	K20.00635	1315 312 074		1	TAKVİYE HİLALİ	G.SHIFT FORK			◆	◆	◆
13		1316 312 024		1	TAKVİYE HİLAL MİLİ	G.SHIFT RAIL			◆	◆	◆
14		0730 260 396		1	TAKVİYE HİLALMİL BURCU	BUSHİNG			◆	◆	◆
15		0630 502 021		1	HİLAL MİL BURÇ SEKMANI	RETAINING RING			◆	◆	◆
16	K20.01016	0750 112 034		1	TAKVİYE HİLAL MİL KEÇESİ	FLANGE PACKING	25x38x14.20mm		◆	◆	◆
17	K20.01772	1315 312 020		1	TAK.HİLAL MİL PİSTONU	PISTON			◆	◆	◆
18	K20.01020	0750 112 177		1	TAKVİYE HAVA KEÇESİ	DOUBLE PACKING	55x63x9.40mm		◆	◆	◆
19	K20.01774	0737 006 095		1	TAK.HİLAL MİL SOMUNU	NUT	M16x1.50mm		◆	◆	◆
20		0634 313 320		1	TAKVİYE SİLİNDİR ORİNGİ	O-RING	67x3mm		◆	◆	◆
21	K20.01689	1315 312 034		1	TAKVİYE SİLİNDİR SEKMANI	RETAINING RING			◆	◆	◆
22		0634 313 018		1	TAKVİYE SİLİNDİR ORİNGİ	O-RING	82x3mm		◆	◆	◆
23	K20.00885	1316 312 015		1	TAKVİYE SİLİNDİR GÖVDESİ	CYLINDER			◆	◆	◆
24	K20.01530	0730 150 766		2	PRİZDİREK BİLYA PULU	THRUST WASHER	3.30mm		◆	◆	◆
25		1315 302 040		1	PRİZDİREK YAĞLAMA SACI	SPACER WASHER			◆	◆	◆
26	K20.01591	1499 298 038		1	EMN.SACI VE P.KİLİT TAK.	SIPLIT RING KIT	4.20mm		◆	◆	◆

NOTES :

X1,X2,X3 are used conjunction with the encoded parts.
Alphabetical Coding has been done according to Input Shaft

NOTLAR :

X1,X2,X3 ile kodlanan parçalar birlikte kullanılır.
Alfabetik kodlamalar prizdireklere göre yapılmıştır.

Original parts names, oem numbers, symbols and descriptions used in this catalogue are for reference purposes only.

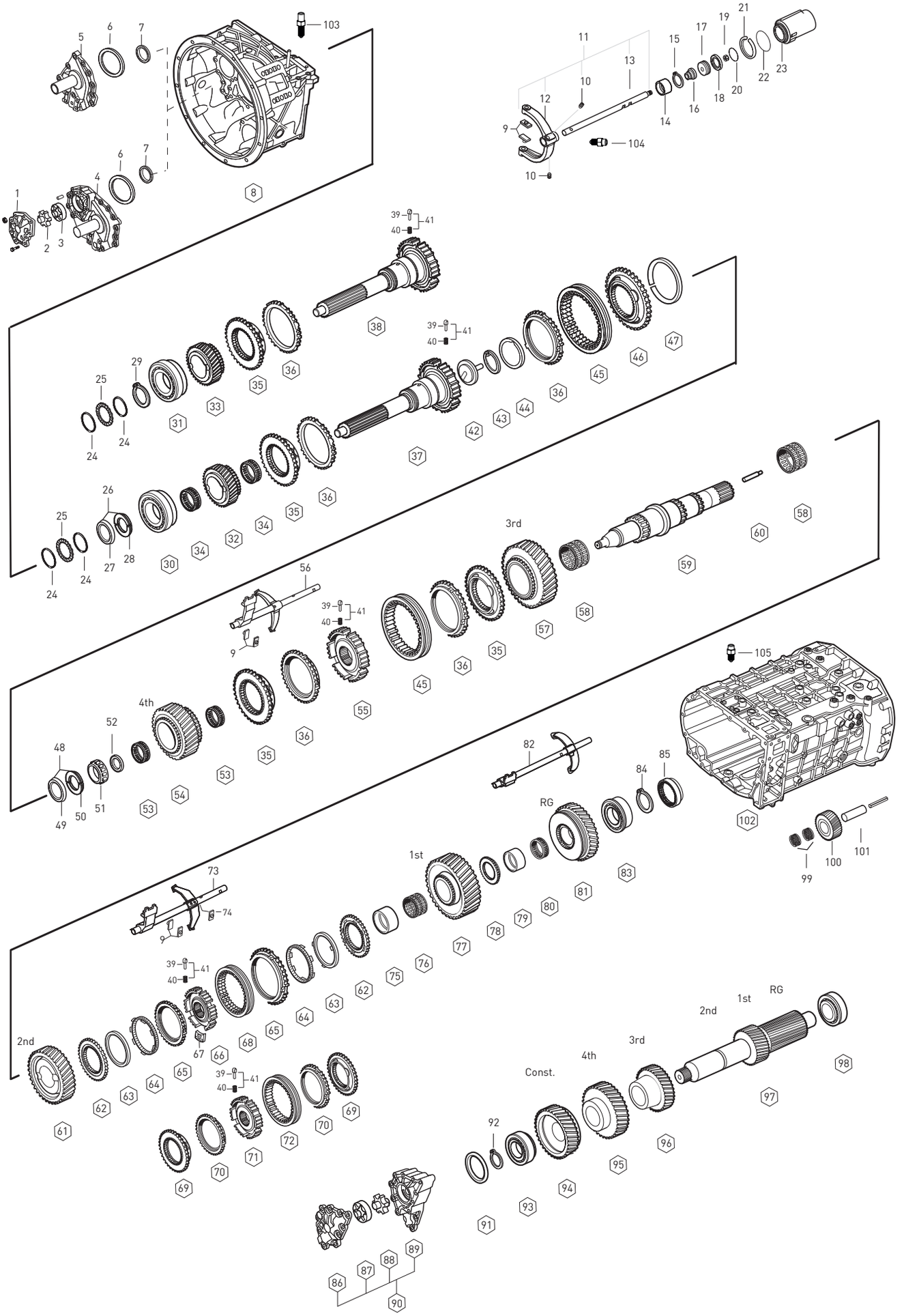

Original parts names, oem numbers, symbols and descriptions used in this catalogue are for reference purposes only.

Fig.	Kacmaz No.	Oem No	Oem Old No	Pcs.	Ürün Tanımı	Description	Sizes	Notes	X1):SG 13.85-0.84	X2):DG 16.53-1.00	X3):SG 13.85-0.84
26	K20.01589	1499 298 036		1	EMN.SACI VE P.KİLİT TAK.	SPLIT RING KIT	4.10mm		◆	◆	◆
26	K20.01572	1499 298 034		1	EMN.SACI VE P.KİLİT TAK.	SPLIT RING KIT	4.00mm		◆	◆	◆
26	K20.01574	1499 298 032		1	EMN.SACI VE P.KİLİT TAK.	SPLIT RING KIT	3.90mm		◆	◆	◆
26	K20.01576	1499 298 030		1	EMN.SACI VE P.KİLİT TAK.	SPLIT RING KIT	3.80mm		◆	◆	◆
27	K20.01547	0730 062 579		1	P. KİLİT EMNİYET SACI	RETAINING RING			◆	◆	◆
28	K20.01590	0730 108 147		2	PARÇALI KİLİT	SPLIT RING	4.20mm		◆	◆	◆
28	K20.01588	0730 108 145		2	PARÇALI KİLİT	SPLIT RING	4.10mm		◆	◆	◆
28	K20.01573	0730 108 143		2	PARÇALI KİLİT	SPLIT RING	4.00mm		◆	◆	◆
28	K20.01575	0730 108 141		2	PARÇALI KİLİT	SPLIT RING	3.90mm		◆	◆	◆
28	K20.01577	0730 108 139		2	PARÇALI KİLİT	SPLIT RING	3.80mm		◆	◆	◆
29	K20.01897	0730 501 598		1	P.DİREK B.BİLYA SEGMANI	RETAINING RING			◆	◆	◆
30	K20.01103	0750 117 431		1	PRİZDİREK ÖN BİLYA	ROLLER BEARING	75x150x30.50mm		◆	◆	
31	K20.01104	0750 117 732		1	PRİZDİREK ÖN BİLYA	ROLLER BEARING	80x150x30.50mm				◆
32	K20.00547	1316 302 002		1	TAKVİYE DİŞLİSİ 34 DİŞ	CONSTANT GEAR 34 T			◆		
32	K20.00193	1316 302 001		1	TAKVİYE DİŞLİSİ 30 DİŞ	CONSTANT GEAR 30 T				◆	
33	K20.00194	1316 302 065		1	TAKVİYE DİŞLİSİ 34 DİŞ	CONSTANT GEAR 34 T					◆
34	K20.01331	0735 321 437		2	TAK.DİŞ.MASURA BİLYA	NEEDLE CAGE	93x101x25mm		◆	◆	
35	K20.00101	1312 304 027		3	TAK.-3-4.VİT.SENKROMENÇ	ENGAGING RING			◆	◆	◆
36	K20.00108	1297 304 484		4	TAK.-3-4.VİT.FRENLEME	SYNCHRONIZING CONE			◆	◆	◆
37	K20.00465	1316 302 015		1	PRİZDİREK	INPUT SHAFT		(M)(D)(R)	◆	◆	
37	K20.00466	1316 302 014		1	PRİZDİREK	INPUT SHAFT		(I)	◆	◆	
38	K20.00187	1316 202 025	(1315 302 085)	1	PRİZDİREK	INPUT SHAFT	L=109 SAE 2	(M)(D)(R)			◆
38	K20.00188	1316 202 026	(1315 302 079)	1	PRİZDİREK	INPUT SHAFT	L=117 SAE 2	(I)			◆
38	K20.00189	1316 202 033		1	PRİZDİREK	INPUT SHAFT	L=238.2	(WSK)			◆
38	K20.00191	1316 221 017		1	PRİZDİREK	INPUT SHAFT		(NMW)			◆
39	K20.00111	1297 304 436		9	PRİZ.ve YILDIZ DİŞLİ FİŞEĞİ	PRESSURE PIECE			◆	◆	◆
40	K20.00110	0732 040 409		9	PRİZ.ve YIL. DİŞ. FİŞEK YAYI	SPRING			◆	◆	◆
41	K20.01745	1295 298 956		kit	YAY FİŞEK TAKIMI	REPAIR KIT			◆	◆	◆
42	K20.01504	1315 302 196		1	PRİZDİREK YAĞ PİPETİ	OIL PIPET			◆	◆	◆
43	K20.01505	0630 502 027		1	PRİZDİREK YAĞ PİPETİ SEG.	RETAINING RING			◆	◆	◆
44	K20.01011	0501 314 060	(0750 101 179)	1	PRİZDİREK ARKA KEÇE	OIL SEAL	50x2mm		◆	◆	◆
45	K20.00098	1310 304 202	(1310 304 174)	2	TAK.-3.-4.VİTES SENK.HALKA	ENGAGING SLEEVE			◆	◆	◆
			(1312 302 057)								
46	K20.00097	1312 304 056		1	TAKVİYE SENKROMENÇ	ENGAGING RING			◆	◆	◆
47	K20.01532	0730 005 465		1	SENKROMENÇ AYAR SEGMANI	RING	3.40mm		◆	◆	◆
47	K20.01531	0730 006 171		1	SENKROMENÇ AYAR SEGMANI	RING	3.50mm		◆	◆	◆
47	K20.01524	0730 005 466		1	SENKROMENÇ AYAR SEGMANI	RING	3.60mm		◆	◆	◆
47	K20.91524	0730 005 466		1	SENKROMENÇ AYAR SEGMANI	RING	3.70mm		◆	◆	◆
47	K20.81524	0730 005 466		1	SENKROMENÇ AYAR SEGMANI	RING	3.80mm		◆	◆	◆
47	K20.71524	0730 005 466		1	SENKROMENÇ AYAR SEGMANI	RING	3.90mm		◆	◆	◆
47	K20.01523	0730 005 468		1	SENKROMENÇ AYAR SEGMANI	RING	4.00mm		◆	◆	◆

NOTES :

X1,X2,X3 are used conjunction with the encoded parts.
Alphabetical Coding has been done according to Input Shaft

NOTLAR :

X1,X2,X3 ile kodlanan parçalar birlikte kullanılır.
Alfabetik kodlamalar prizdireklere göre yapılmıştır.

Original parts names, oem numbers, symbols and descriptions used in this catalogue are for reference purposes only.

GEARBOX 16 S 221 OLD

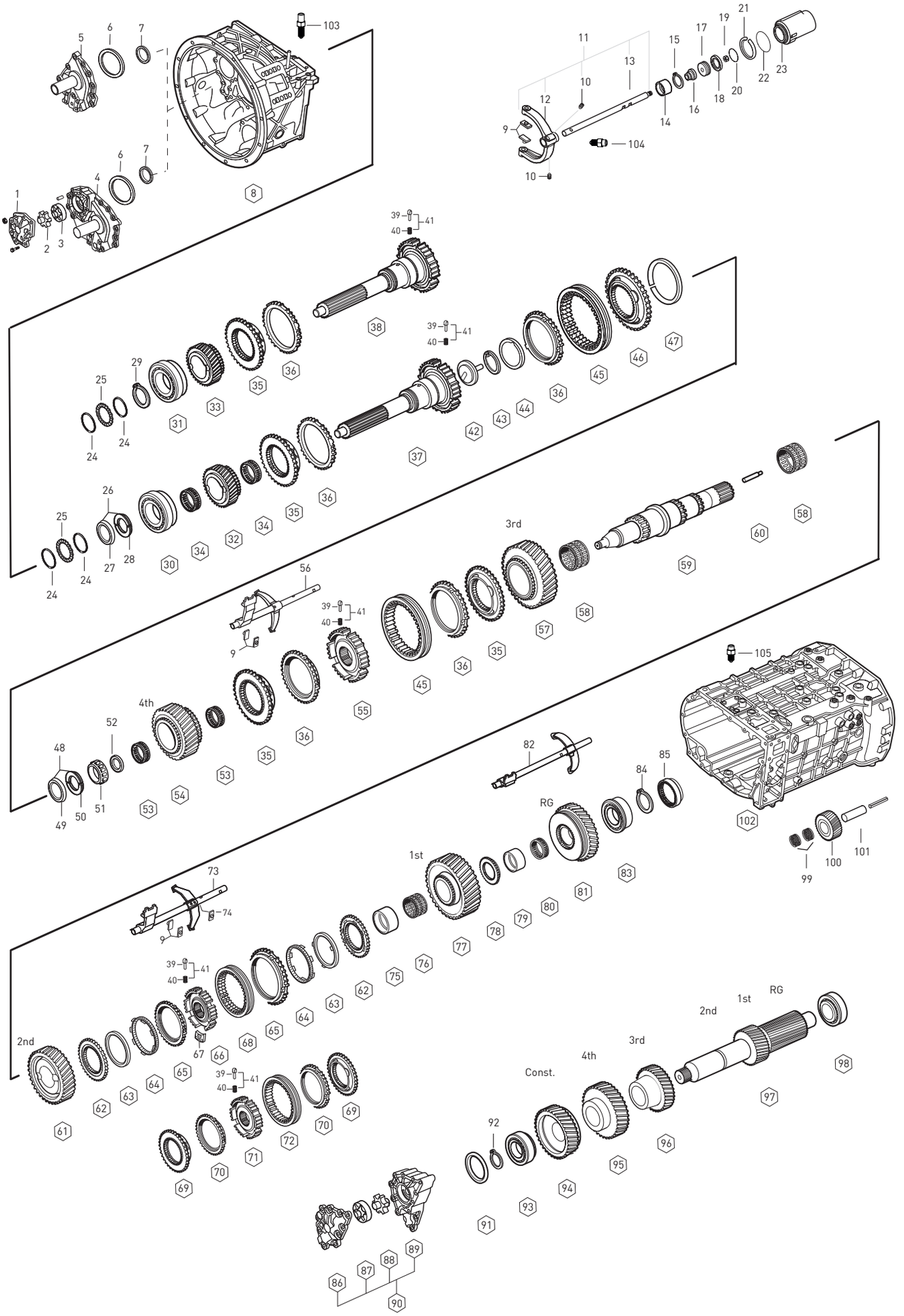

Original parts names, oem numbers, symbols and descriptions used in this catalogue are for reference purposes only.

Fig.	Kacmaz No.	Oem No	Oem Old No	Pcs.	Ürün Tanımı	Description	Sizes	Notes	(1) SG 13.85-0.84	(2) DG 16.53-1.00	(3) SG 13.85-0.84
48	K20.01561	1499 298 027		1	EMN.SACI VE P.KİLİT TAK.	SPLIT RING KIT	5.00mm		◆	◆	◆
48	K20.01563	1499 298 026		1	EMN.SACI VE P.KİLİT TAK.	SPLIT RING KIT	4.90mm		◆	◆	◆
48	K20.01580	2001580		1	EMN.SACI VE P.KİLİT TAK.	SPLIT RING KIT	4.85mm		◆	◆	◆
48	K20.01565	1499 298 025		1	EMN.SACI VE P.KİLİT TAK.	SPLIT RING KIT	4.80mm		◆	◆	◆
48	K20.01567	1499 298 024		1	EMN.SACI VE P.KİLİT TAK.	SPLIT RING KIT	4.70mm		◆	◆	◆
48	K20.01569	1499 298 023		1	EMN.SACI VE P.KİLİT TAK.	SPLIT RING KIT	4.60mm		◆	◆	◆
49	K20.01571	0730 062 781		1	KİLİT EMNİYET SACI	RETAINING RING			◆	◆	◆
50	K20.01562	0730 107 023		2	PARÇALI KİLİT	SPLIT RING	5.00mm		◆	◆	◆
50	K20.01564	0730 107 022		2	PARÇALI KİLİT	SPLIT RING	4.90mm		◆	◆	◆
50	K20.01581	2001581		2	PARÇALI KİLİT	SPLIT RING	4.85mm		◆	◆	◆
50	K20.01566	0730 107 021		2	PARÇALI KİLİT	SPLIT RING	4.80mm		◆	◆	◆
50	K20.01568	0730 107 020		2	PARÇALI KİLİT	SPLIT RING	4.70mm		◆	◆	◆
50	K20.01570	0730 107 019		2	PARÇALI KİLİT	SPLIT RING	4.60mm		◆	◆	◆
51	K20.01109	0750 117 232	(0735 371 563)	1	KAMALI MİL UÇ BİLYA	ROLLER BEARING	42x40.3mm		◆	◆	◆
52	K20.01527	1315 304 048		1	KAMALI MİL UÇ BİLYA PULU	THRUST WASHER	8.00mm		◆	◆	◆
52	K20.01528	1315 304 047		1	KAMALI MİL UÇ BİLYA PULU	THRUST WASHER	7.90mm		◆	◆	◆
52	K20.01529	1315 304 046		1	KAMALI MİL UÇ BİLYA PULU	THRUST WASHER	7.80mm		◆	◆	◆
52	K20.01762	1315 304 045		1	KAMALI MİL UÇ BİLYA PULU	THRUST WASHER	7.70mm		◆	◆	◆
52	K20.01763	1315 304 044		1	KAMALI MİL UÇ BİLYA PULU	THRUST WASHER	7.60mm		◆	◆	◆
52	K20.01764	1315 304 043		1	KAMALI MİL UÇ BİLYA PULU	THRUST WASHER	7.50mm		◆	◆	◆
52	K20.01765	1315 304 085		1	KAMALI MİL UÇ BİLYA PULU	THRUST WASHER	7.40mm		◆	◆	◆
52	K20.01766	1315 304 086		1	KAMALI MİL UÇ BİLYA PULU	THRUST WASHER	7.30mm		◆	◆	◆
53	K20.01112	0750 118 258	(0750 118 191)	2	4.VİTES DİŞLİ MAS.BİLYA	NEEDLE CAGE	67x101x38mm		◆	◆	◆
54	K20.00207	1316 304 007		1	4.VİTES DİŞLİSİ 30 DİŞ	GEAR 4th 30 T			◆	◆	◆
55	K20.00181	1312 304 052		1	3./ 4.VİT.YILDIZ DİŞLİ	GUIDE SLEEVE			◆	◆	◆
56		1316 206 047		1	3./ 4.VİTES HİLALİ	GEAR SHIFT FORK 3rd/4th			◆	◆	◆
57	K20.00210	1316 304 009		1	3.VİTES DİŞLİSİ 32 DİŞ	GEAR 3rd 32 T			◆	◆	◆
58	K20.01326	0750 115 303	(0735 321 094)	2	2./3.VİTES MASURA BİLYA	NEEDLE CAGE	92x100x63mm		◆	◆	◆
59	K20.00431	1316 304 130		1	KAMALI MİL	MAIN SHAFT			◆	◆	◆
60	K20.01506	1324 304 014	(1312 304 150)	1	KAMALI MİL YAĞ BORUSU	OIL PIPE			◆	◆	◆
61	K20.00212	1316 304 003		1	2.VİTES DİŞLİSİ 37 DİŞ	GEAR 2nd 37 T			◆	◆	◆
62	K20.00143	1312 304 106		2	1./ 2.VİT.SENKROMENÇ	ENGAGING RING			◆	◆	◆
63	K20.00144	1268 304 424		2	1./ 2.VİT.SENK.FRENLEME	SYNCHRONIZING CONE			◆	◆	◆
64	K20.00302	1268 304 494	(1268 304 491)	2	1./ 2.VİT.SENK.FRENLEME	INTERMEDIATE CONE			◆	◆	◆
65	K20.00145	1268 304 525		2	1./ 2.VİT.SENK.FRENLEME	SYNCHRONIZING CONE			◆	◆	◆
66	K20.00146	1312 304 158		1	1./ 2.VİT.YILDIZ DİŞLİ	GUIDE SLEEVE			◆	◆	◆
67	K20.00209	1312 304 159		3	1./ 2.VİT.YILDIZ DİŞ.BAKLASI	SLIDING BLOCK			◆	◆	◆
68	K20.00147	1310 304 175	(1312 304 157)	1	1./ 2.VİT.SENK.HALKA	ENGAGING SLEEVE			◆	◆	◆
69	K20.00182	1313 304 009		2	1./ 2.VİT.SENKROMENÇ	ENGAGING RING			◆	◆	◆
70	K20.00112	1297 304 485	(1297 304 401)	2	1./ 2.VİT.SENK.FRENLEME	SYNCHRONIZING CONE			◆	◆	◆
71	K20.00179	1313 304 008		1	1./ 2.VİT.YILDIZ DİŞLİ	GUIDE SLEEVE			◆	◆	◆

NOTES :

X1,X2,X3 are used conjunction with the encoded parts.
Alphabetical Coding has been done according to Input Shaft

NOTLAR :

X1,X2,X3 ile kodlanan parçalar birlikte kullanılır.
Alfabetik kodlamalar prizdireklere göre yapılmıştır.

Original parts names, oem numbers, symbols and descriptions used in this catalogue are for reference purposes only.

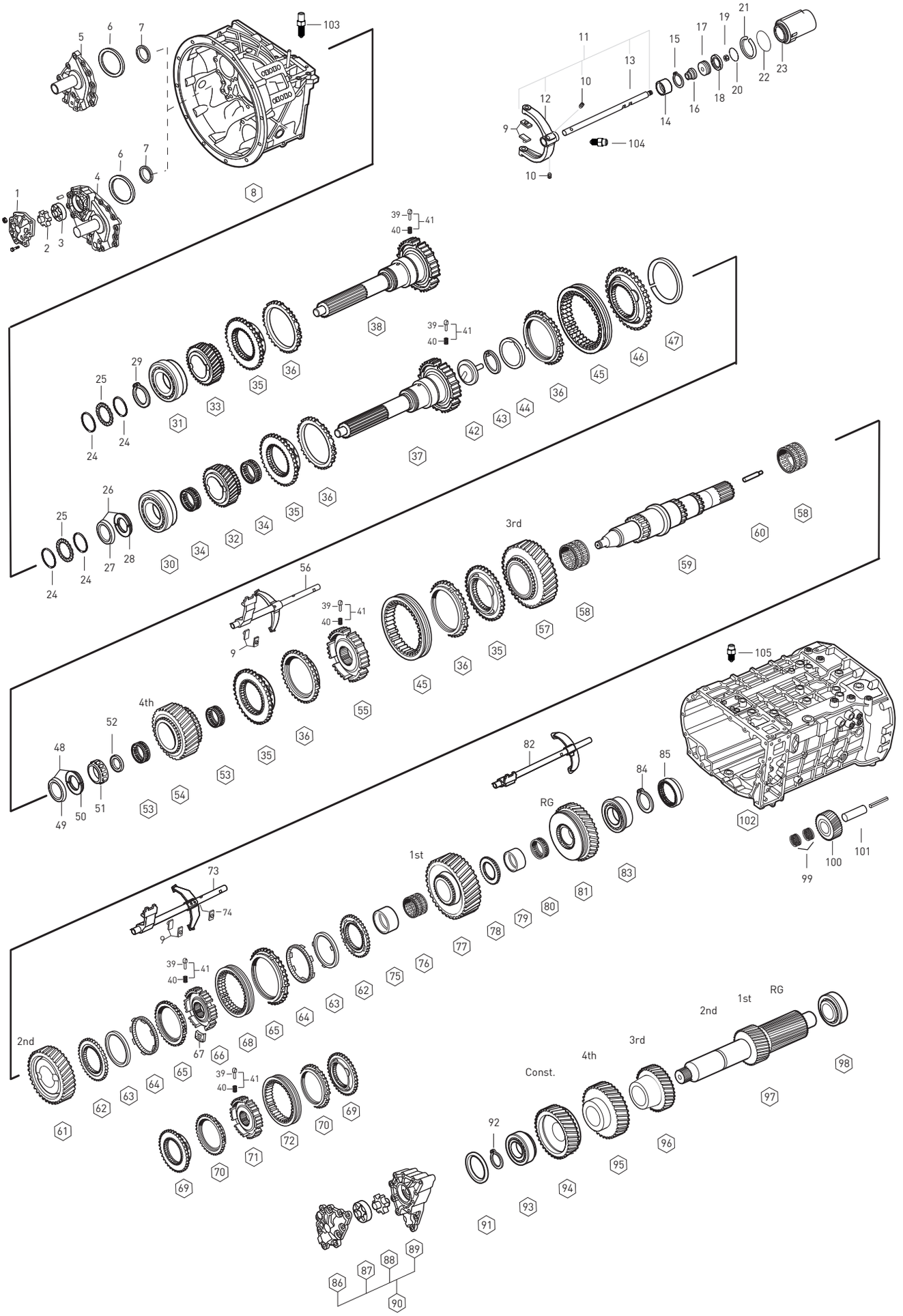

Original parts names, oem numbers, symbols and descriptions used in this catalogue are for reference purposes only.

Fig.	Kacmaz No.	Oem No	Oem Old No	Pcs.	Ürün Tanımı	Description	Sizes	Notes	(X1):SG 13.85-0.84	(X2):DG 16.53-1.00	(X3):SG 13.85-0.84
72	K20.00115	1316 304 078		1	1./ 2.VİT.SENK.HALKA	ENGAGING SLEEVE			◆	◆	◆
73		1316 206 043		1	1./2.VİTES HİLALİ	GEAR SHIFT FORK 1st/2nd			◆	◆	◆
74	K20.00812	1315 306 079		1	1./2.VİT.HİL.ORTALAMA PABUCU	SLIDING PAD			◆	◆	◆
75	K20.00389	1312 304 084		1	1.VİTES MAS.BİLYA ÇANAĞI	BEARING RACE			◆	◆	◆
76	K20.01328	0750 115 327		1	1.VİTES MASURA BİLYA	NEEDLE CAGE	96x104x72mm		◆	◆	◆
77	K20.00447	1316 304 013		1	1.VİTES DİŞLİSİ 44 DİŞ	GEAR 1st 44 T			◆	◆	◆
78	K20.00421	1312 304 124		1	GERİ VİTES YILDIZ DİŞLİ	HUB			◆	◆	◆
79	K20.00422	1316 304 133	(1312 304 082)	1	GERİ VİT.MAS.BİL.ÇANAĞI	BEARING RACE			◆	◆	◆
80	K20.01330	0750 115 326		1	GERİ VİTES MASURA BİLYA	NEEDLE CAGE	90x98x50mm		◆	◆	◆
81	K20.00448	1316 304 015		1	GERİ VİTES DİŞLİSİ 42 DİŞ	REVERSE GEAR 42 T			◆	◆	◆
82		1316 206 050		1	GERİ VİTES HİLALİ	GEAR SHIFT FORK/RG			◆	◆	◆
83	K20.01121	0750 117 678		1	KAMALI MİL ARKA BİLYA	ROLLER BEARING	80x140x36.50mm		◆	◆	◆
84	K20.02151	0630 501 339		1	K.MİL ARKA BİLYA SEGMANI	RETAINING RING	80x3.65mm		◆	◆	◆
84		0630 501 338		1	K.MİL ARKA BİLYA SEGMANI	RETAINING RING	80x3.60mm		◆	◆	◆
84	K20.02146	0630 501 316		1	K.MİL ARKA BİLYA SEGMANI	RETAINING RING	80x3.50mm		◆	◆	◆
84	K20.02147	0630 501 315		1	K.MİL ARKA BİLYA SEGMANI	RETAINING RING	80x3.40mm		◆	◆	◆
84	K20.02141	0630 501 314		1	K.MİL ARKA BİLYA SEGMANI	RETAINING RING	80x3.30mm		◆	◆	◆
84	K20.02148	0630 501 313		1	K.MİL ARKA BİLYA SEGMANI	RETAINING RING	80x3.20mm		◆	◆	◆
85	K20.01592	1315 332 054		1	KAMALI MİL ARKA PUL	WASHER			◆	◆	◆
86	K20.00568	1315 302 120	(1315 402 120)	1	ŞANZ.YAĞ POMPA KAPAĞI	PUMP COVER					◆
87	K20.00542	1314 202 039		1	YAĞ POMPA İÇ ROTOR	OIL PUMP GEAR					◆
88	K20.00543	1315 303 027		1	YAĞ POMPA DIŞ ROTOR	ROTOR					◆
89	K20.00569	1315 302 121	(1315 402 121)	1	ŞANZ.YAĞ POMPA GÖVDESİ	PUMP HOUSING					◆
90	K20.00570	2000570		kit	ŞANZ.YAĞ POMPASI KOMPLE	OIL PUMP ASSY.					◆
91	K20.01648	0730 102 099		1	GRUP MİLİ ÖN BİLYA RAYNELİ	SHIM	3.00mm		◆	◆	
91	K20.01649	0730 102 060		1	GRUP MİLİ ÖN BİLYA RAYNELİ	SHIM	2.60mm		◆	◆	
91	K20.01650	0730 102 068		1	GRUP MİLİ ÖN BİLYA RAYNELİ	SHIM	2.20mm		◆	◆	
91	K20.01651	0730 102 075		1	GRUP MİLİ ÖN BİLYA RAYNELİ	SHIM	1.85mm		◆	◆	
91	K20.01652	2001652		1	GRUP MİLİ ÖN BİLYA RAYNELİ	SHIM	0.30mm		◆	◆	
91	K20.01653	2001653		1	GRUP MİLİ ÖN BİLYA RAYNELİ	SHIM	0.20mm		◆	◆	
91	K20.01654	2001654		1	GRUP MİLİ ÖN BİLYA RAYNELİ	SHIM	0.10mm		◆	◆	
91	K20.01674	0730 106 917		1	GRUP MİLİ ÖN BİLYA RAYNELİ	SHIM	3.00mm				◆
91		0730 106 916		1	GRUP MİLİ ÖN BİLYA RAYNELİ	SHIM	2.95mm				◆
91	K20.01751	0730 106 915		1	GRUP MİLİ ÖN BİLYA RAYNELİ	SHIM	2.90mm				◆
91	K20.01750	0730 106 913		1	GRUP MİLİ ÖN BİLYA RAYNELİ	SHIM	2.80mm				◆
91	K20.01749	0730 106 911		1	GRUP MİLİ ÖN BİLYA RAYNELİ	SHIM	2.70mm				◆
91	K20.01675	0730 106 909		1	GRUP MİLİ ÖN BİLYA RAYNELİ	SHIM	2.60mm				◆
91	K20.01748	0730 100 799		1	GRUP MİLİ ÖN BİLYA RAYNELİ	SHIM	2.50mm				◆
91	K20.01747	0730 100 801		1	GRUP MİLİ ÖN BİLYA RAYNELİ	SHIM	2.40mm				◆
91	K20.01746	0730 100 803		1	GRUP MİLİ ÖN BİLYA RAYNELİ	SHIM	2.30mm				◆
91	K20.01676	0730 101 467		1	GRUP MİLİ ÖN BİLYA RAYNELİ	SHIM	2.20mm				◆

NOTES :

X1,X2,X3 are used conjunction with the encoded parts.
Alphabetical Coding has been done according to Input Shaft

NOTLAR :

X1,X2,X3 ile kodlanan parçalar birlikte kullanılır.
Alfabetik kodlamalar prizdireklere göre yapılmıştır.

Original parts names, oem numbers, symbols and descriptions used in this catalogue are for reference purposes only.

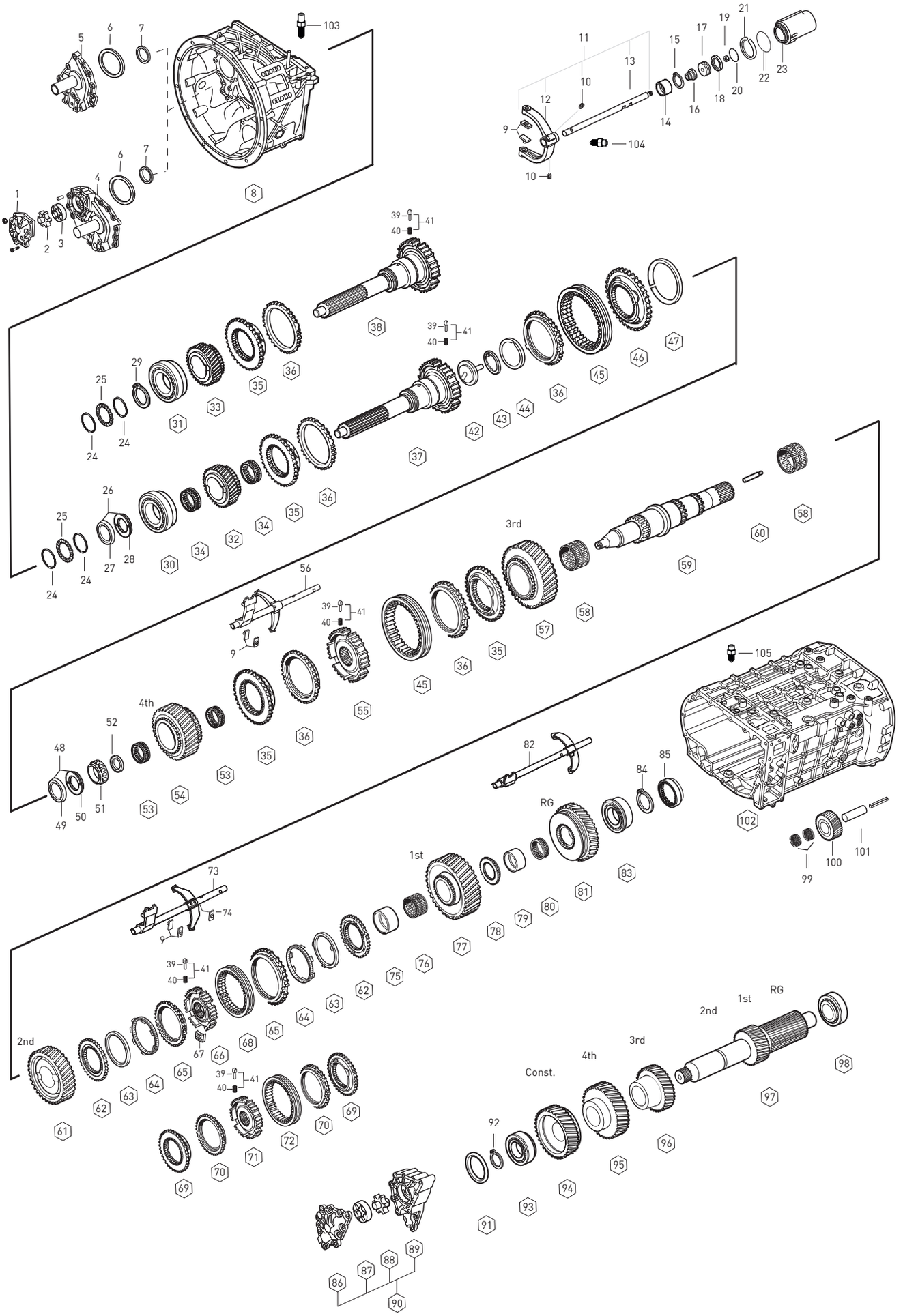

Original parts names, oem numbers, symbols and descriptions used in this catalogue are for reference purposes only.

Fig.	Kacmaz No.	Oem No	Oem Old No	Pcs.	Ürün Tanımı	Description	Sizes	(X1) :SG 13.85-0.84	(X2) :DG 16.53-1.00	(X3) :SG 13.85-0.84
91		0730 101 469		1	GRUP MİLİ ÖN BİLYA RAYNELİ	SHIM	2.10mm			◆
91	K20.01739	0730 106 906		1	GRUP MİLİ ÖN BİLYA RAYNELİ	SHIM	1.90mm			◆
91	K20.01737	2001737		1	GRUP MİLİ ÖN BİLYA RAYNELİ	SHIM	0.25mm			◆
91	K20.01736	2001736		1	GRUP MİLİ ÖN BİLYA RAYNELİ	SHIM	0.20mm			◆
91	K20.01735	2001735		1	GRUP MİLİ ÖN BİLYA RAYNELİ	SHIM	0.10mm			◆
92	K20.01960	0630 531 065		1	GRUP MİLİ ÖN BİLYA SEGMANI	RETAINING RING		◆	◆	◆
93	K20.01124	0750 117 010	(0750 117 030)	1	GRUP MİLİ ÖN BİLYA	ROLLER BEARING	50.8X100X35mm	◆	◆	
			(0735 370 055)							
93	K20.01126	0750 117 009	(0735 372 156)	1	GRUP MİLİ ÖN BİLYA	ROLLER BEARING	49.20x103.1x43.60mm			◆
94	K20.00197	1316 303 002		1	TAKVİYE DİŞLİ KARŞ.37 DİŞ	CONSTANT GEAR 37 T		◆		
94	K20.00201	1316 303 001		1	TAKVİYE DİŞLİ KARŞ.39 DİŞ	CONSTANT GEAR 39 T			◆	
94	K20.00198	1316 303 031		1	TAKVİYE DİŞLİ KARŞ.37 DİŞ	CONSTANT GEAR 37 T				◆
95	K20.00202	1316 303 004		1	4.VİTES DİŞLİ KARŞ.39 DİŞ	GEAR 4th 39 T		◆	◆	◆
96	K20.00205	1316 303 006		1	3.VİTES DİŞLİ KARŞ.28 DİŞ	GEAR 3rd 28 T		◆	◆	◆
97	K20.00450	1316 303 053	(1316 303 008)	1	GRUP MİLİ 19-23 DİŞ	COUNTER SHAFT 19-23 T				◆
97	K20.00451	1316 303 052	(1316 303 007)	1	GRUP MİLİ 17-20 DİŞ	COUNTER SHAFT 17-20 T		◆		
97	K20.00449	1316 303 034		1	GRUP MİLİ 19-23 DİŞ	COUNTER SHAFT 19-23 T			◆	
98	K20.01126	0750 117 009	(0735 372 156)	1	GRUP MİLİ ARKA BİLYA	ROLLER BEARING	49.20x103.1x43.60mm	◆	◆	◆
99	K20.01338	0750 115 369		2	KÜÇÜK GERİ VİT.MAS.BİLYA	NEEDLE CAGE	45x57x25mm	◆	◆	◆
100	K20.00639	1316 305 002		1	K.GERİ VİTES DİŞLİSİ 20 DİŞ	REV.IDLER GEAR 20 T		◆		◆
100	K20.00656	1316 305 001	(1316 305 008)	1	K.GERİ VİTES DİŞLİSİ 22 DİŞ	REV.IDLER GEAR 22 T			◆	
101	K20.00662	1316 201 030		1	KÜÇÜK GERİ VİTES PİMİ	PIN		◆		◆
101	K20.00657	1316 201 029		1	KÜÇÜK GERİ VİTES PİMİ	PIN			◆	
102		1316 201 109		1	ŞANZIMAN ORTA GÖVDE	HOUSING				◆
102		1316 201 111		1	ŞANZIMAN ORTA GÖVDE	HOUSING		◆	◆	
103	K20.00813	1324 207 004	(1315 207 014)	1	İSTİNATLAMA FİŞEĞİ	DETENT PLUNGER	168 N	◆	◆	◆
104	K20.00819	1324 207 033	(1313 207 003)	1	İSTİNATLAMA FİŞEĞİ	DETENT PLUNGER	235 N	◆	◆	◆
105	K20.00838	1324 207 035	(1313 207 005)	1	İSTİNATLAMA FİŞEĞİ	DETENT PLUNGER	145 N	◆	◆	◆
			(1313 207 001)							

NOTES :

X1,X2,X3 are used conjunction with the encoded parts.
Alphabetical Coding has been done according to Input Shaft

NOTLAR :

X1,X2,X3 ile kodlanan parçalar birlikte kullanılır.
Alfabetik kodlamalar prizdireklere göre yapılmıştır.

Original parts names, oem numbers, symbols and descriptions used in this catalogue are for reference purposes only.

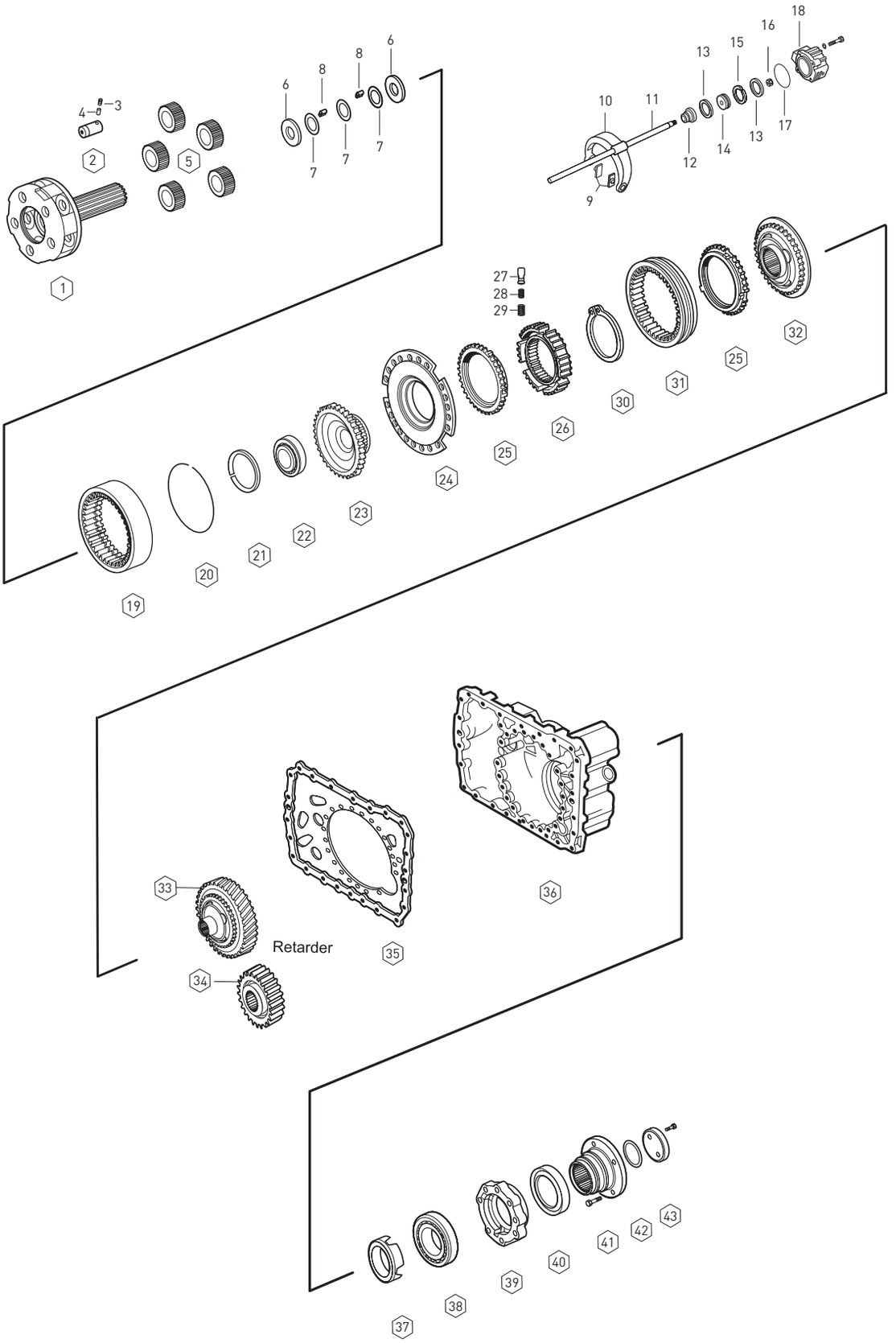

Original parts names, oem numbers, symbols and descriptions used in this catalogue are for reference purposes only.

Fig.	Kacmaz No.	Oem No	Oem Old No	Pcs.	Ürün Tanımı	Description	Sizes	(X1):SG 13.85-0.84	(X2):DG 16.53-1.00		
1	K20.00629	1316 232 006	(1312 232 015)	1	ŞANZIMAN HEYKELİ	PLANETARY CARRIER		◆	◆		
2	K20.00444	1312 332 026		5	HEYKEL KOZA DİŞLİ PİMİ	PLANET SHAFT		◆	◆		
3		0631 329 167		5	HEYK. KOZA DİŞ. PİM KİLİT PİMİ	LOCK PIN	3.0x26mm	◆	◆		
4		0631 329 051		5	HEYK. KOZA DİŞ. PİM KİLİT PİMİ	LOCK PIN	5.0x26mm	◆	◆		
5	K20.00119	1312 232 014		5	HEYK. KOZA DİŞ. TAKIMI	PLANETARY GEAR SET		◆	◆		
6	K20.01513	0501 308 981		10	HEYKEL KOZA DİŞLİ PULU	THRUST WASHER	1.25mm	◆	◆		
7	K20.01514	0730 107 168		15	HEYKEL KOZA DİŞLİ PULU	THRUST WASHER	1.00mm	◆	◆		
8	K20.01454	0750 119 116		140	HEYK.KOZA DİŞ.TANE BİLYA	NEEDLE ROLLER	10X16.80mm	◆	◆		
9	K20.00341	1296 334 004		2	AĞIR SERİ HİLAL PABUCU	SLIDING PAD		◆	◆		
10		1316 334 005		1	AĞIR SERİ HİLAL MİLİ	GEAR SHIFT		◆	◆		
11		1315 334 039		1	AĞIR SERİ HİLALİ	GEAR SHIFT FORK		◆	◆		
12	K20.01016	0750 112 034		1	A.SERİ HİLAL MİL KEÇESİ	FLANGE PACKING	25x38x14.20mm	◆	◆		
13	K20.01024	0734 317 150		2	AĞIR SERİ HAVA KEÇESİ	SEALING RING	80x90x4.80mm	◆	◆		
14		1296 334 039		1	HİLAL MİL PİSTONU	PISTON		◆	◆		
15	K20.01657	0750 112 066		1	HİLAL MİL PİSTON FİBERİ	GUIDE RING		◆	◆		
16	K20.01774	0737 006 095		1	HİLAL MİL SOMUNU	NUT	M16x1.50mm	◆	◆		
17		0501 317 536		1	AĞIR SERİ SİLİNDİR ORİNGİ	O-RING		◆	◆		
18	K20.00844	1315 334 021		1	AĞIR SERİ SİLİNDİR GÖVDESİ	CYLINDER		◆	◆		
18	K20.00843	1315 334 052		1	AĞIR SERİ SİLİNDİR GÖVDESİ	CYLINDER		◆	◆		
19	K20.00605	1295 332 086		1	ÇEMBER DİŞLİ 86 DİŞ	RING WHEEL 86 T		◆	◆		
20	K20.01656	0730 505 056	(0730 505 055)	1	ÇEMBER DİŞLİ SEGMANI	SPRING RING	3.20mm	◆	◆		
21		0730 513 917		1	PLANET ÇAN DİŞ.BİL. SEGMANI	RETAINING RING	2.40mm	◆			
21		0730 513 916		1	PLANET ÇAN DİŞ.BİL. SEGMANI	RETAINING RING	2.30mm		◆		
22	K20.01135	0635 338 035		1	PLANET ÇAN DİŞLİ BİLYASI	ROLLER BEARING	100.0X125.0X13mm	◆	◆		
23	K20.00620	1297 332 120		1	PLANET ÇAN DİŞLİ 86 DİŞ	CARRIER HUB 86 T		◆	◆		
24	K20.00157	1315 233 006		1	TEPSİ SENKROMENÇ	FLANGE		◆	◆		
25	K20.00038	1296 333 045	(1296 333 022)	2	AĞIR SERİ SENK.FRENLEME	SYNCHRONIZING CONE		◆	◆		
			(0769 174 091)								
26	K20.00006	1313 233 001	(1297 233 018)	1	AĞIR SERİ YILDIZ DİŞLİ	GUIDE SLEEVE	.	◆	◆		
27	K20.00471	1240 304 278		9	AĞIR SERİ YILDIZ DİŞLİ FİŞEĞİ	PRESSURE PIECE		◆	◆		
28	K20.00470	0732 040 386		9	A.SERİ YILDIZ DİŞLİ FİŞEK YAYI	SPRING		◆	◆		
29	K20.00469	0732 040 385		9	A.SERİ YILDIZ DİŞLİ FİŞEK YAYI	SPRING		◆	◆		
30		0630 501 061		1	A.SERİ YILDIZ DİŞLİ SEGMANI	RETAINING RING		◆	◆		
31	K20.00039	1296 333 023	(0769 186 286)	1	AĞIR SERİ SENK.HALKA	ENGAGING SLEEVE		◆	◆		
32	K20.00075	1297 233 056		1	SERİ SENKROMENÇ	ENGAGING RING		◆	◆		
33	K20.00452	1316 233 010		1	SERİ SENKROMENÇ	ENGAGING RING	Retarder	◆	◆		
34	K20.00649	6085 301 012		1	RETARDER DİŞ. KARŞILIĞI 29 DİŞ	GEAR 29 T	Retarder	◆	◆		
35		1315 301 118		1	ŞANZ.ARKA GÖVDE PLEYTİ	INTERM.PLATE		◆	◆		
36		1315 301 083		1	ŞANZIMAN ARKA GÖVDE	HOUSING		◆	◆		
36		6085 301 167		1	ŞANZIMAN ARKA GÖVDE	HOUSING	Retarder	◆	◆		
37		1313 238 001		1	ŞANZIMAN KM DEVİR SACI	PULSE STAR		◆	◆		

NOTES :

X1,X2 are used conjunction with the encoded parts.

NOTLAR :

X1,X2 ile kodlanan parçalar birlikte kullanılır.

Original parts names, oem numbers, symbols and descriptions used in this catalogue are for reference purposes only.

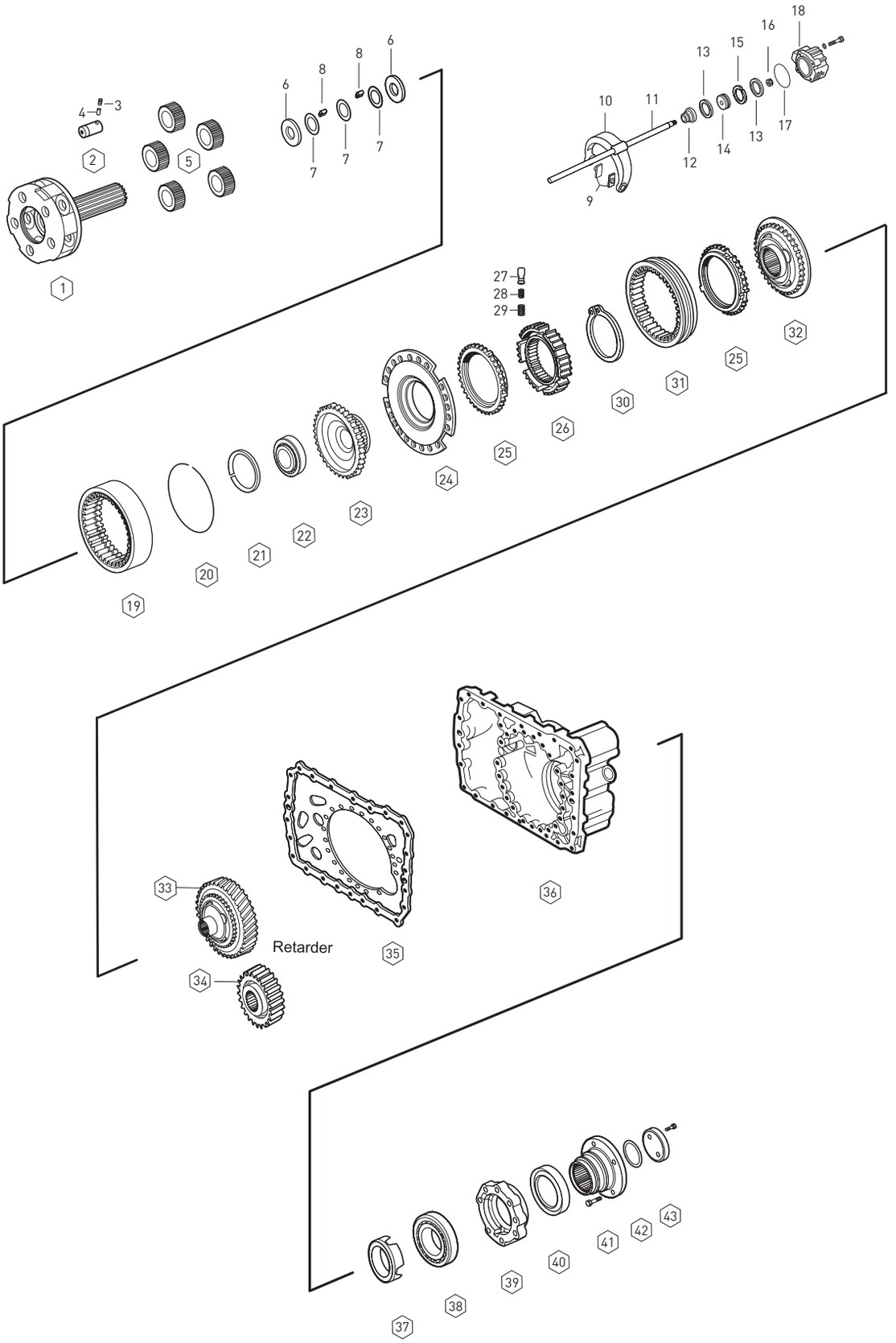

Original parts names, oem numbers, symbols and descriptions used in this catalogue are for reference purposes only.

Fig.	Kacmaz No.	Oem No	Oem Old No	Pcs.	Ürün Tanımı	Description	Sizes	X1):SG 13.85-0.84	X2):DG 16.53-1.00
38	K20.01134	0750 116 394	(0750 116 002)	1	ŞANZIMAN ARKA BİLYA	ROLLER BEARING	90x160x30mm	◆	◆
			(0635 304 904)						
39		1315 231 004		1	ŞANZIMAN ARKA KAPAK	COVER		◆	◆
40	K20.01013	0750 111 341		1	ŞANZ.ARKA KAPAK KEÇESİ	OIL SEAL	105x130x12mm	◆	◆
40	K20.01022	0734 319 459	(0734 300 421)	1	ŞANZ.ARKA KAPAK KEÇESİ	OIL SEAL	RETARDER - 105x125x12mm	◆	◆
41	K20.00427	1297 333 110		1	ŞANZIMAN FLANŞI	COMPANION FLANGE	4-H, Ø180mm	◆	◆
42		0634 314 015		1	ŞANZIMAN FLANŞ ORİNGİ	O-RING	68x4mm	◆	◆
43	K20.01661	1295 332 051		1	ŞANZIMAN FLANŞ PULU	WASHER		◆	◆

NOTES :

X1,X2 are used conjunction with the encoded parts.

NOTLAR :

X1,X2 ile kodlanan parçalar birlikte kullanılır.

Original parts names, oem numbers, symbols and descriptions used in this catalogue are for reference purposes only.

SYNCHRONIZER KIT 3rd/4th/CONST.

Fig.	Kacmaz No.	Oem No	Oem Old No	Pcs.	Ürün Tanımı	Description
	K20.00523	1312 204 031		kit	TAK.3./4.VİT.SENK.KİT	SYNCH.KIT 3rd/4th/Const.
1	K20.00101	1312 304 027		1	TAK.3./4.VİT.SENKROMENÇ	ENGAGING RING
2	K20.00108	1297 304 484	(1297 304 402)	1	TAK.3./4.VİT.FRENLEME	SYNCHRONIZING CONE

SYNCHRONIZER KIT CONST.

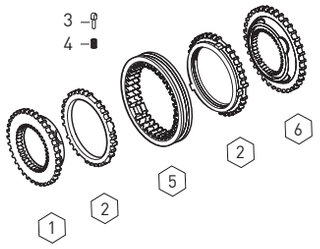

Fig.	Kacmaz No.	Oem No	Oem Old No	Pcs.	Ürün Tanımı	Description
	K20.00522	1297 298 955		kit	TAKVİYE SENKROMENÇ KİT	SYNCHRONIZER KIT Const
1	K20.00101	1312 304 027		1	TAKVİYE SENKROMENÇ	ENGAGING RING
2	K20.00108	1297 304 484	(1297 304 402)	2	TAKVİYE SENK.FRENLEME	SYNCHRONIZING CONE
3	K20.00111	1297 304 436		3	TAK.YILDIZ DİŞLİ FİŞEĞİ	PRESSURE PIECE
4	K20.00110	0732 040 409		3	TAKVİYE YILDIZ DİŞLİ YAYI	SPRING
5	K20.00098	1310 304 202	(1312 302 057)	1	TAKVİYE SENK.HALKA	ENGAGING SLEEVE
6	K20.00097	1312 304 056		1	TAKVİYE SENKROMENÇ	ENGAGING RING

SYNCHRONIZER KIT 3rd/4th /Const.

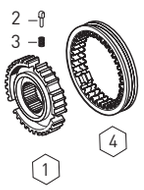

Fig.	Kacmaz No.	Oem No	Oem Old No	Pcs.	Ürün Tanımı	Description
	K20.00525	1312 204 028		kit	3./4.VİT.HALKA YILDIZ KİTİ	SYNCH.KIT 3rd/4th
1	K20.00181	1312 304 052		1	3./4.VİT.YILDIZ DİŞLİ	GUIDE SLEEVE
2	K20.00111	1297 304 436		3	3./4.VİT.YILDIZ DİŞLİ FİŞEĞİ	PRESSURE PIECE
3	K20.00110	0732 040 409		3	3./4.VİT.YILDIZ DİŞLİ YAYI	SPRING
4	K20.00098	1310 304 202	(1312 302 057)	1	3./4.VİTES SENK.HALKA	ENGAGING SLEEVE

SYNCHRONIZER KIT 3rd/4th

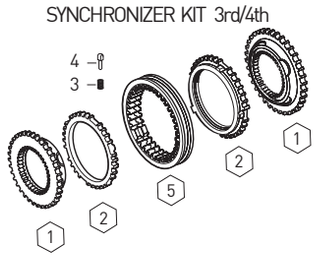

Fig.	Kacmaz No.	Oem No	Oem Old No	Pcs.	Ürün Tanımı	Description
	K20.00524	1315 298 030		kit	3./4.VİT.SENKROMENÇ KİT	SYNCH.KIT 3rd/4th
1	K20.00101	1312 304 027		2	3./4.VİT.SENKROMENÇ	ENGAGING RING
2	K20.00108	1297 304 484	(1297 304 402)	2	3./4.VİT.SENK.FRENLEME	SYNCHRONIZING CONE
3	K20.00111	1297 304 436		3	3./4.VİT.YILDIZ DİŞLİ FİŞEĞİ	PRESSURE PIECE
4	K20.00110	0732 040 409		3	3./4.VİT.YILDIZ DİŞLİ YAYI	SPRING
5	K20.00098	1310 304 202	(1312 302 057)	1	3./4.VİT.SENK.HALKA	ENGAGING SLEEVE

SYNCHRONIZER KIT 3rd/4th

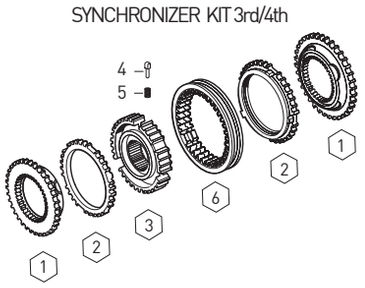

Fig.	Kacmaz No.	Oem No	Oem Old No	Pcs.	Ürün Tanımı	Description
	K20.00383	1315 298 018		kit	3./4.VİT.SENKROMENÇ KİT	SYNCH.KIT 3rd/4th
1	K20.00101	1312 304 027		2	3./4.VİT.SENKROMENÇ	ENGAGING RING
2	K20.00108	1297 304 484	(1297 304 402)	2	3./4.VİT.SENK.FRENLEME	SYNCHRONIZING CONE
3	K20.00181	1312 304 052		1	3./4.VİT.YILDIZ DİŞLİ	GUIDE SLEEVE
4	K20.00111	1297 304 436		3	3./4.VİT.YILDIZ DİŞLİ FİŞEĞİ	PRESSURE PIECE
5	K20.00110	0732 040 409		3	3./4.VİT.YILDIZ DİŞLİ YAYI	SPRING
6	K20.00098	1310 304 202	(1312 302 057)	1	3./4.VİT.SENK.HALKA	ENGAGING SLEEVE

SYNCHRONIZER KIT 1st/2nd

Fig.	Kacmaz No.	Oem No	Oem Old No	Pcs.	Ürün Tanımı	Description
	K20.00529	1313 204 009		kit	1./2.VİT.SENKROMENÇ KİT	SYNCH.KIT 1st/2nd
1	K20.00182	1313 304 009		1	1./2.VİT.SENKROMENÇ	ENGAGING RING
2	K20.00112	1297 304 485	(1297 304 401)	1	1./2.VİT.SENK.FRENLEME	SYNCHRONIZING CONE

SYNCHRONIZER KIT 1st/2nd

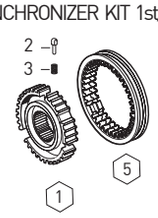

Fig.	Kacmaz No.	Oem No	Oem Old No	Pcs.	Ürün Tanımı	Description
	K20.00528	1313 204 008		kit	1./2.VİT.HALKA YILDIZ KİTİ	SYNCH.KIT 1st/2nd
1	K20.00179	1313 304 008		1	1./2.VİT.YILDIZ DİŞLİ	GUIDE SLEEVE
2	K20.00111	1297 304 436		3	1./2.VİT.YILDIZ DİŞLİ FİŞEĞİ	PRESSURE PIECE
3	K20.00110	0732 040 409		3	1./2.VİT.YILDIZ DİŞLİ YAYI	SPRING
4	K20.00115	1316 304 078		1	1./2.VİT.SENK.HALKA	ENGAGING SLEEVE

SYNCHRONIZER KIT 1st/2nd

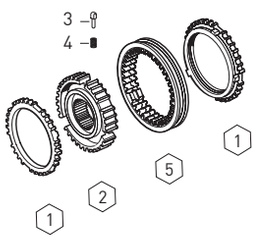

Fig.	Kacmaz No.	Oem No	Oem Old No	Pcs.	Ürün Tanımı	Description
	K20.00526	1313 204 003		kit	1./2.VİT.SENKROMENÇ KİT	SYNCH.KIT 1st/2nd
1	K20.00112	1297 304 485	(1297 304 401)	2	1./2.VİT.FRENLEME	SYNCH.CONE
2	K20.00179	1313 304 008		1	1./2.VİT.YILDIZ DİŞLİ	GUIDE SLEEVE
3	K20.00111	1297 304 436		3	1./2.VİT.YILDIZ DİŞLİ FİŞEĞİ	PRESSURE PIECE
4	K20.00110	0732 040 409		3	1./2.VİT.YILDIZ DİŞLİ YAYI	SPRING
5	K20.00115	1316 304 078		1	1./2.VİT.SENK.HALKA	ENGAGING SLEEVE

Original parts names, oem numbers, symbols and descriptions used in this catalogue are for reference purposes only.

Fig.	Kacmaz No.	Oem No	Oem Old No	Pcs.	Ürün Tanımı	Description
	K20.00527	1313 298 909		kit	1./2.VİT.SENKROMENÇ KİT	SYNCH.KIT 1st/2nd
1	K20.00182	1313 304 009		2	1./2.VİT.SENKROMENÇ	ENGAGING RING
2	K20.00112	1297 304 485	(1297 304 401)	2	1./2.VİT.FRENLEME	SYNCH.CONE
3	K20.00179	1313 304 008		1	1./2.VİT.YILDIZ DİŞLİ	GUIDE SLEEVE
4	K20.00111	1297 304 436		3	1./2.VİT.YILDIZ DİŞLİ FİŞEĞİ	PRESSURE PIECE
5	K20.00110	0732 040 409		3	1./2.VİT.YILDIZ DİŞLİ YAYI	SPRING
6	K20.00115	1316 304 078		1	1./2.VİT.SENK.HALKA	ENGAGING SLEEVE

SYNCHRONIZER KIT 1st/2nd

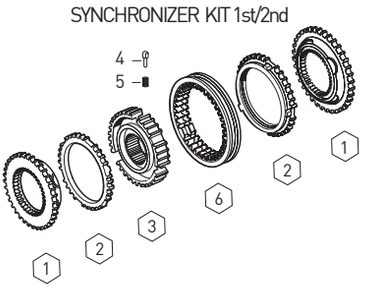

Fig.	Kacmaz No.	Oem No	Oem Old No	Pcs.	Ürün Tanımı	Description
	K20.00482	1315 204 006	(1312 298 911)	kit	1./2.VİT.SENKROMENÇ KİT	SYNCH.KIT 1st/2nd
1	K20.00143	1312 304 106		2	1./ 2.VİT.SENKROMENÇ	ENGAGING RING
2	K20.00144	1268 304 424		2	1./ 2.VİT.SENK.FRENLEME	SYNCHRONIZING CONE
3	K20.00302	1268 304 494	(1268 304 491)	2	1./ 2.VİT.SENK.FRENLEME	INTERMEDIATE CONE
4	K20.00145	1268 304 525		2	1./ 2.VİT.SENK.FRENLEME	SYNCHRONIZING CONE
5	K20.00146	1312 304 158		1	1./ 2.VİT.YILDIZ DİŞLİ	GUIDE SLEEVE
6	K20.00209	1312 304 159		3	1./ 2.VİT.YIL.DİŞLİ BAKLASI	SLIDING BLOCK
7	K20.00111	1297 304 436		3	1./ 2.VİT.YILDIZ DİŞLİ FİŞEĞİ	PRESSURE PIECE
8	K20.00110	0732 040 409		3	1./ 2.VİT.YILDIZ DİŞLİ YAYI	SPRING
9	K20.00147	1310 304 175	(1312 304 157)	1	1./ 2.VİT.SENK.HALKA	ENGAGING SLEEVE

SYNCHRONIZER KIT 1st/2nd

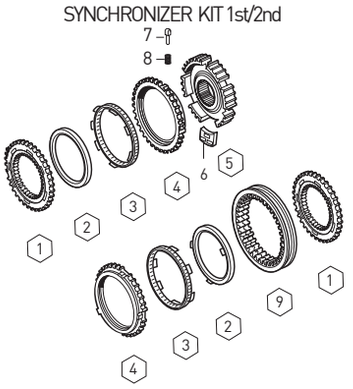

Fig.	Kacmaz No.	Oem No	Oem Old No	Pcs.	Ürün Tanımı	Description
	K20.00532	1315 233 029		kit	AĞIR SERİ SENK.KİT	SYNCHRONIZER KIT
1	K20.00038	1296 333 045	(1296 333 022)	2	AĞIR SERİ FRENLEME	SYNCHRONIZING CONE
2	K20.00185	1313 333 001		1	AĞIR SERİ YILDIZ DİŞLİ	GUIDE SLEEVE
3	K20.00469	0732 040 385		9	AĞIR SERİ YILDIZ DİŞLİ YAYI	SPRING
4	K20.00470	0732 040 386		9	AĞIR SERİ YILDIZ DİŞLİ YAYI	SPRING
5	K20.00471	1240 304 278		9	AĞIR SERİ YILDIZ DİŞ.FİŞEĞİ	PRESSURE PIECE
6	K20.00039	1296 333 023		1	AĞIR SERİ SENK.HALKA	ENGAGING SLEEVE

SYNCHRONIZER KIT PLANETARY

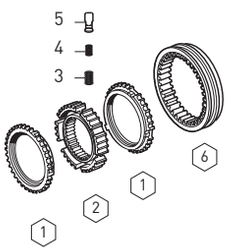

Fig.	Kacmaz No.	Oem No	Oem Old No	Pcs.	Ürün Tanımı	Description
1		1296 313 131		1	P.KİLİT EMNİYET SACI	RETAINING RING
2		0730 104 627		1	PARÇALI KİLİT	SPLIT RING
3		1296 313 238		1	PTO MİL KOVANI	SLIDING SLEEVE
4		0730 104 628		1	PTO DİŞLİ AYAR PULU	THRUST WASHER
5		1296 313 082		1	PTO DİŞLİ	GEAR 33 T
5		1296 313 083		1	PTO DİŞLİ	GEAR 36 T
5		1296 313 084		1	PTO DİŞLİ	GEAR 38 T
5		1296 313 085		1	PTO DİŞLİ	GEAR 39 T
5		1296 313 086		1	PTO DİŞLİ	GEAR 46 T
6	K20.00556	1296 213 028		1	PTO MİLİ DÜZ	INTERM.SHAFT
7	K20.00555	1296 213 028		1	PTO MİLİ FREZELİ	INTERM.SHAFT (Milled)
8		1296 313 125		1	PTO MİL SOMUNU	NUT
9		0735 410 139		1	PTO MİL BİLYASI	ROLLER BEARING
10		7429 032 102		1	PTO BİLYA KAPAK PULU	THRUST WASHER
11		1232 304 062		1	PTO BİLYA KAPAK RAYNELİ	SHIM (1.00mm)
11		1232 304 063		1	PTO BİLYA KAPAK RAYNELİ	SHIM (0.90mm)
11		1232 304 072		1	PTO BİLYA KAPAK RAYNELİ	SHIM (0.70mm)
12		1250 313 190		1	PTO BAĞLANTI KAPAĞI	COVER
13	K20.01013	0750 111 341		1	ŞANZ.ARKA KAPAK KEÇESİ	OIL SEAL

P.T.O. (POWER TAKE OFF)

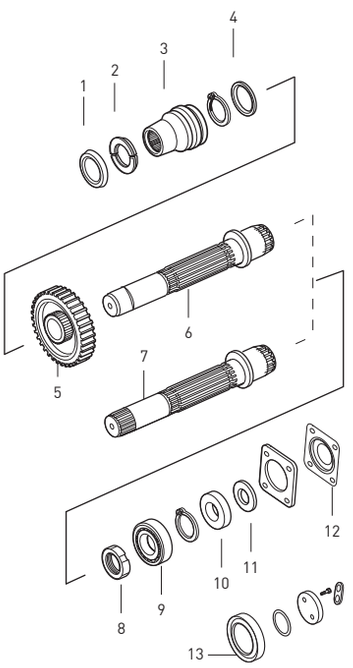

Original parts names, oem numbers, symbols and descriptions used in this catalogue are for reference purposes only.

GEARBOX GASKET KIT

Fig.	Kacmaz No.	Oem No	Oem Old No	Pcs.	Ürün Tanımı	Description
1	K20.01585	1315 298 001		Kit	ŞANZIMAN CONTA TAKIMI	GASKET KIT
2		1315 301 233		1	ŞANZ.ÖN GÖVDE CONTASI	GASKET
3		0501 314 246		1	PRİZ.KEÇE KAPAK CONTASI	GASKET
3		0501 314 587		1	PRİZ.KEÇE KAPAK CONTASI	GASKET
4		1316 301 042		2	ŞANZ.ARKA GÖVDE CONTASI	GASKET
4		1315 301 007		2	ŞANZ.ARKA GÖVDE CONTASI	GASKET
5		0501 318 308		2	ŞANZ.KULE KAPAK CONTASI	GASKET
6		1315 307 012		1	ŞANZ.KULESİ GÖVDE CONTASI	GASKET
7		1315 307 013		1	ŞANZ.KULE ALT KAPAK CONTASI	GASKET
8		0501 317 240		1	ŞANZ.KULE ÜST KAPAK CONTASI	GASKET
9		1315 331 001		1	ŞANZ.BİLYA KAPAK CONTASI	GASKET
10	K20.02108	1238 308 201		1	PTO BAĞLANTI KAPAK CONTASI	GASKET
11		0501 316 146		1	ŞANZ.DAMPER CONTASI	GASKET
11		1315 301 234		1	ŞANZ.DAMPER CONTASI	GASKET
12		1316 301 022		1	ŞANZ.MÜŞÜR KAPAK CONTASI	GASKET
13		1315 303 060		1	YAĞ POMPA CONTASI	GASKET
14		1315 307 242		1	SERVO KULE PİSTON CONTASI	GASKET

GEARBOX GASKET KIT

Fig.	Kacmaz No.	Oem No	Oem Old No	Pcs.	Ürün Tanımı	Description	Sizes
	K20.01039	1315 298 002		Kit	KEÇE TAKIMI	SEAL KIT	
1	K20.01037	0634 300 302	(0734 300 196)	1	KEÇE	OIL SEAL	25X35X7mm
2	K20.01036	0634 307 367		1	KEÇE	OIL SEAL	25X35X7/10mm
3	K20.01008	0734 310 104		1	PRİZDİREK KEÇESİ	OIL SEAL	52X68X8mm
4	K20.01034	0501 312 738	(0501 325 918)	4	KEÇE	OIL SEAL	30X37X4mm
5	K20.01035	0634 300 020		1	KEÇE	OIL SEAL	25X32X5mm
6	K20.01003	0734 310 387	(0734 310 311)	1	PRİZDİREK KEÇESİ	OIL SEAL	55X75X8mm
7	K20.01038	0734 309 765	(0734 309 376)	1	KEÇE	OIL SEAL	28X42X11mm
8	K20.01013	0750 111 341	(0734 319 551)	1	ŞANZ.FLANŞ KEÇESİ	OIL SEAL	105X130X12mm

GEARBOX GASKET KIT

Fig.	Kacmaz No.	Oem No	Oem Old No	Pcs.	Ürün Tanımı	Description	Sizes
	K20.01044	1315 298 003		kit	KEÇE TAKIMI	SEAL KIT	
1	K20.01016	0750 112 034		2	TAK.HİLAL MİL KEÇESİ	OIL SEAL	25X38X14.2mm
2	K20.01026	0750 112 131		2	HİLAL MİL KEÇESİ	OIL SEAL	25X40X15mm
3	K20.01019	0734 307 294	(0734 307 280)	2	A.SERİ HAVA KEÇESİ	OIL SEAL	50X91X7.5mm
4	K20.01024	0734 317 150	(0750 112 019)	2	A.SERİ HAVA KEÇESİ	OIL SEAL	80X90X4.8mm
5	K20.01779	0501 324 670		1	TAK.SİLİNDİR PİSTONU	PISTON	
6	K20.01657	0750 112 066	(0501 307 769)	1	A.SERİ HİLAL MİL FİBERİ	RING	85X90X5.5mm
7	K20.01020	0750 112 177		1	SİLİNDİR HAVA KEÇESİ	OIL SEAL	55X63X9.4mm
8		0634 801 062		12	ALM.PUL	SEAL RING	18X24X1.4mm
9		0634 801 097		1	ALM.PUL	WASHER	30X36mm
10		0634 801 173		5	ALM.PUL	WASHER	22X27mm
11		0634 801 203		1	ALM.PUL	SEAL RING	16X22X1.4mm
12		0634 801 206		5	ALM.PUL	SEAL RING	24X29mm
13		0634 801 219		2	ALM.PUL	SEAL RING	16X22X1.4mm
14		0634 801 249		1	ALM.PUL	SEAL RING	
15		0634 801 321		1	ALM.PUL	WASHER	
16		0730 008 055		1	ALM.PUL	WASHER	
17		0730 008 056		1	ALM.PUL	WASHER	
18		0730 008 057		8	ALM.PUL	WASHER	
19		0734 303 046		1	ORİNG	O-RING	
20		0634 314 020		4	ORİNG	O-RING	
21		0634 313 198		1	ORİNG	O-RING	
22		0634 313 293		1	ORİNG	O-RING	
23		0634 313 320		1	ORİNG	O-RING	
24		0634 313 018		1	ORİNG	O-RING	
25		0634 313 505		1	ORİNG	O-RING	
26		0634 314 015		1	ORİNG	O-RING	
27	K20.02113	0634 313 805		1	ORİNG	O-RING	
28		0634 314 021		2	ORİNG	O-RING	
29		0634 312 523		1	LASTİK KEÇE	RING	
30		0501 317 536		1	KANALLI ORİNG	RING	

Original parts names, oem numbers, symbols and descriptions used in this catalogue are for reference purposes only.

ECOSPLIT III	NEW ECOSPLIT
16 S 221 NEW	16 S 2280 TO 16 S 2280 TD 16 S 2320 TO 16 S 2320 TD 16 S 2321 TO 16 S 2321 TD 16 S 2322 TO 16 S 2322 TD 16 S 2325 TO 16 S 2325 TD 16 S 2330 TO 16 S 2330 TD 16 S 2520 TO 16 S 2520 TD 16 S 2521 TO 16 S 2521 TD 16 S 2522 TO 16 S 2522 TD 16 S 2525 TO 16 S 2525 TD 16 S 2720 TO 16 S 2720 TD

Original parts names, oem numbers, symbols and descriptions used in this catalogue are for reference purposes only.

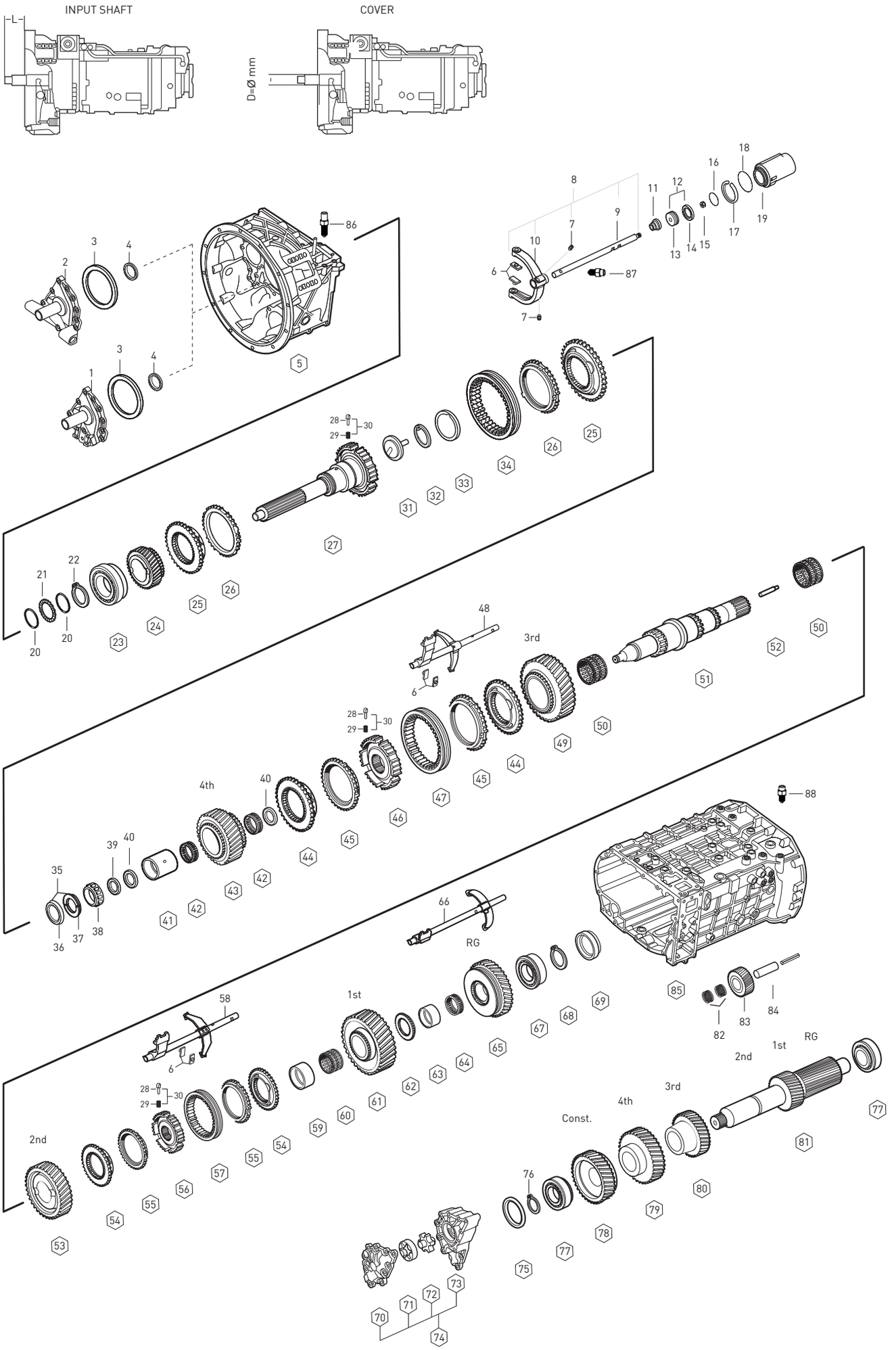

Original parts names, oem numbers, symbols and descriptions used in this catalogue are for reference purposes only.

Fig.	Kacmaz No.	Oem No	Oem Old No	Pcs.	Ürün Tanımı	Description	Sizes	Not	[X1]:SG-TO 13.80-0.84	[X2]:DG-TD 16.41-1.00		
1	K20.00560	1315 302 136	(1315 402 136)	1	PRİZDİREK KEÇE KAPAĞI	COVER	L=7 D=60	(M)(R)(B)	◆	◆		
1	K20.00559	1315 302 075	(1315 402 075)	1	PRİZDİREK KEÇE KAPAĞI	COVER	L=7 D=60	(D)	◆	◆		
2	K20.00663	1315 302 134	(1315 302 122)	1	PRİZDİREK KEÇE KAPAĞI	COVER	L=7 D=60	(M)	◆	◆		
2	K20.00634	1315 302 106	(1315 402 106)	1	PRİZDİREK KEÇE KAPAĞI	COVER	L=7 D=66	(R)	◆	◆		
2	K20.00653	1315 302 072	(1315 402 072)	1	PRİZDİREK KEÇE KAPAĞI	COVER	L=3 D=62.6	(I)	◆	◆		
2		1315 202 060	(4130 306 306)	1	PRİZDİREK KEÇE KAPAĞI	COVER		(WSK)	◆	◆		
3	K20.01683	0730 007 486		1	PRİZ.ÖN BİLYA RAYNELİ	SHIM	2.00mm		◆	◆		
3	K20.01684	0730 007 483		1	PRİZ.ÖN BİLYA RAYNELİ	SHIM	1.85mm		◆	◆		
3	K20.01685	0730 007 479		1	PRİZ.ÖN BİLYA RAYNELİ	SHIM	1.65mm		◆	◆		
3	K20.01686	0730 007 136		1	PRİZ.ÖN BİLYA RAYNELİ	SHIM	1.60mm		◆	◆		
3	K20.01687	0730 007 129		1	PRİZ.ÖN BİLYA RAYNELİ	SHIM	1.25mm		◆	◆		
3	K20.01668	0730 005 748		1	PRİZ.ÖN BİLYA RAYNELİ	SHIM	0.90mm		◆	◆		
3	K20.01671	2050 309 067		1	PRİZ.ÖN BİLYA RAYNELİ	SHIM	0.30mm		◆	◆		
3	K20.01582	0730 005 747		1	PRİZ.ÖN BİLYA RAYNELİ	SHIM	0.25mm		◆	◆		
3	K20.01672	2050 309 068		1	PRİZ.ÖN BİLYA RAYNELİ	SHIM	0.20mm		◆	◆		
3	K20.01673	2001673		1	PRİZ.ÖN BİLYA RAYNELİ	SHIM	0.10mm		◆	◆		
4	K20.01003	0734 310 387	(0734 310 386)	1	PRİZDİREK ÖN KEÇE	OIL SEAL	55x75x8mm		◆	◆		
4	K20.01008	0734 310 104		1	PRİZDİREK ÖN KEÇE	OIL SEAL	52x68x8mm	(WSK)	◆	◆		
5		1316 201 142	(1316 301 064)	1	ŞANZIMAN ÖN GÖVDE	HOUSING			◆	◆		
5		1316 201 149		1	ŞANZIMAN ÖN GÖVDE	HOUSING			◆	◆		
5		1316 221 015		1	ŞANZIMAN ÖN GÖVDE	HOUSING		(NMW)	◆	◆		
6	K20.00325	1316 306 015		6	TAK.-1-2-3-4.VİT.HİL.PABUCU	SLIDING PAD			◆	◆		
7	K20.01688	1315 312 047		2	TAK.HİLAL VİDASI	SCREW	M12x1.00mm		◆	◆		
8	K20.00655	1316 212 010		1	TAKVİYE HİLALİ KOMPLE	G.S.FORK and RAIL ASSY.			◆	◆		
9	K20.00654	1316 312 023		1	TAKVİYE HİLAL MİLİ	G SHIFT RAIL			◆	◆		
10	K20.00635	1315 312 074		1	TAKVİYE HİLALİ	G SHIFT FORK			◆	◆		
11	K20.01026	0750 112 253	(0750 112 131)	1	TAKVİYE HİLAL MİL KEÇESİ	FLANGE PACKING	25x40x14.50mm		◆	◆		
12	K20.01779	0501 324 670		1	TAKVİYE PİSTON SİLİNDİRİ	PISTON			◆	◆		
13	K20.01772	1315 312 020		1	TAKVİYE HİLAL MİL PİSTON	PISTON			◆	◆		
14	K20.01020	0750 112 177		1	TAKVİYE HAVA KEÇESİ	DOUBLE PACKING	55x63x9.40mm		◆	◆		
15	K20.01774	0737 006 095		1	TAK.HİLAL MİL SOMUNU	NUT	M16x1.50mm		◆	◆		
16		0634 313 320		1	TAKVİYE SİLİNDİR ORİNGİ	O-RING			◆	◆		
17	K20.01689	1315 312 034		1	TAKVİYE SİLİNDİR SEGMANI	RETAINING RING			◆	◆		
18		0634 313 018		1	TAKVİYE SİLİNDİR ORİNGİ	O-RING			◆	◆		
19	K20.00885	1316 312 015		1	TAKVİYE SİLİNDİR GÖVDESİ	CYLINDER			◆	◆		
20	K20.01530	0730 150 766		2	P.DİREK YAĞLAMA PULU	THRUST WASHER			◆	◆		
21		1315 302 040		1	P.DİREK YAĞLAMA SACI	SPACER RING			◆	◆		
22	K20.01897	0730 501 598		1	P.DİREK B.BİLYA SEGMANI	RETAINING RING			◆	◆		
23	K20.01104	0750 117 732		1	PRİZDİREK ÖN BİLYA	ROLLER BEARING	80x150x30.50mm		◆	◆		
24	K20.00195	1316 302 067	(1316 302 026)	1	TAKVİYE DİŞLİSİ 35 DİŞ	CONSTANT GEAR 35 T			◆			
24	K20.00196	1316 302 066		1	TAKVİYE DİŞLİSİ 30 DİŞ	CONSTANT GEAR 30 T				◆		

NOTES :

X1,X2 are used conjunction with the encoded parts.
Alphabetical Coding has been done according to Input Shaft

X1 : 16 S 221 SG, 16 S 2280 TO, 16 S 2320 TO, 16 S 2321 TO
16 S 2322 TO, 16 S 2325 TO, 16 S 2330 TO, 16 S 2520 TO, 16 S 2521 TO
16 S 2522 TO, 16 S 2525 TO, 16 S 2720 TO, 16 S 2721 TO

X2 : 16 S 221 DG, 16 S 2280 TD, 16 S 2320 TD, 16 S 2321 TD
16 S 2322 TD, 16 S 2325 TD, 16 S 2330 TD, 16 S 2520 TD, 16 S 2521 TD
16 S 2522 TD, 16 S 2525 TD, 16 S 2720 TD

NOTLAR :

X1,X2 ile kodlanan parçalar birlikte kullanılır.
Alfabetik kodlamalar prizdireklere göre yapılmıştır.

X1 : 16 S 221 SG, 16 S 2280 TO, 16 S 2320 TO, 16 S 2321 TO
16 S 2322 TO, 16 S 2325 TO, 16 S 2330 TO, 16 S 2520 TO, 16 S 2521 TO
16 S 2522 TO, 16 S 2525 TO, 16 S 2720 TO, 16 S 2721 TO

X2 : 16 S 221 DG, 16 S 2280 TD, 16 S 2320 TD, 16 S 2321 TD
16 S 2322 TD, 16 S 2325 TD, 16 S 2330 TD, 16 S 2520 TD, 16 S 2521 TD
16 S 2522 TD, 16 S 2525 TD, 16 S 2720 TD

Original parts names, oem numbers, symbols and descriptions used in this catalogue are for reference purposes only.

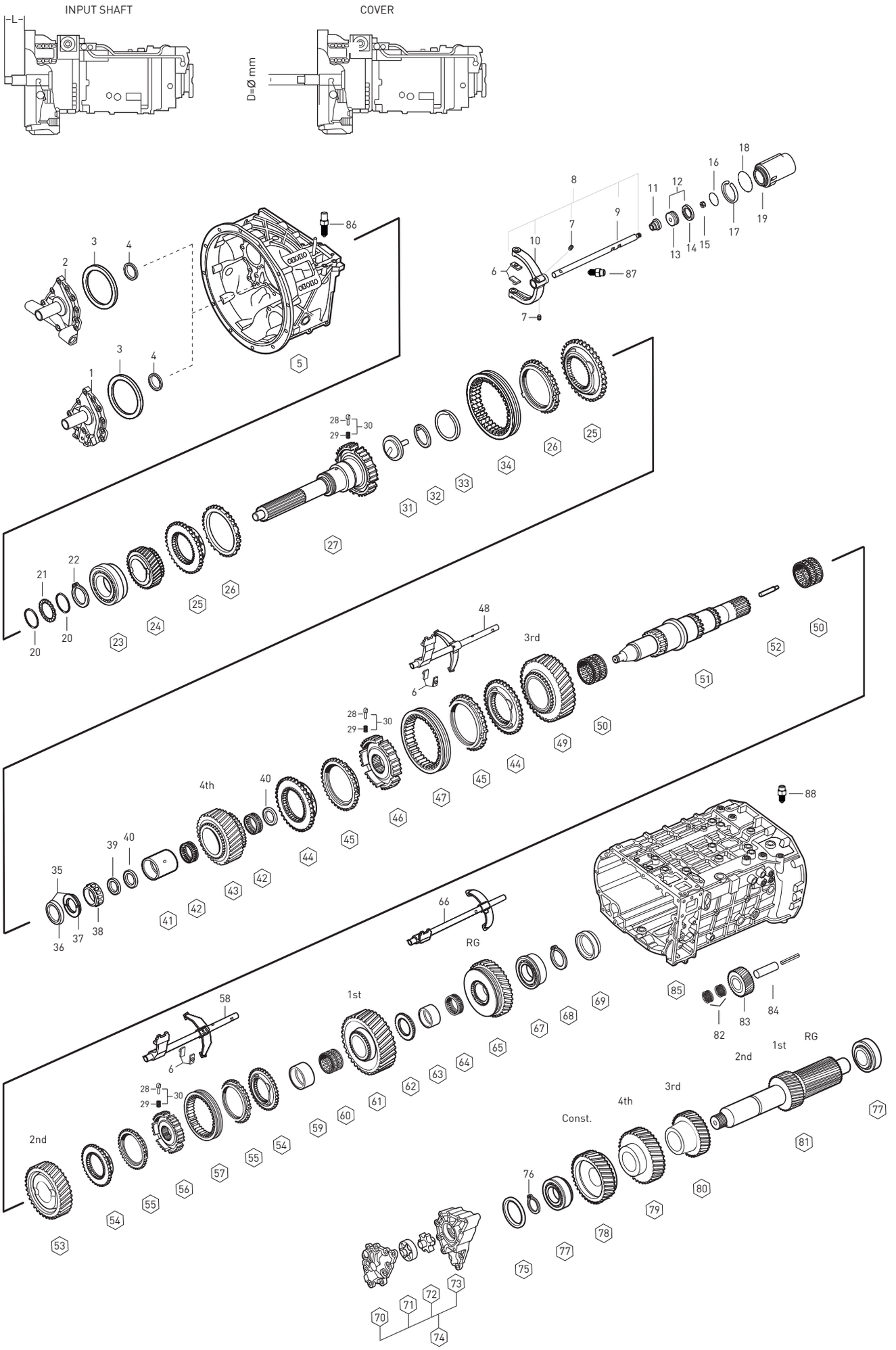

Original parts names, oem numbers, symbols and descriptions used in this catalogue are for reference purposes only.

Fig.	Kacmaz No.	Oem No	Oem Old No	Pcs.	Ürün Tanımı	Description	Sizes	Notes	(X1) SG-TO 1380-0.84	(X2) DG-TD 1641-1.00		
25	K20.00101	1312 304 027		2	TAKVİYE SENKROMENÇ	ENGAGING RING			◆	◆		
26	K20.00108	1297 304 484	(1297 304 402)	2	TAKVİYE SENK.FRENLEME	SYNCHRONIZING CONE			◆	◆		
27	K20.00187	1316 202 025	(1316 302 085)	1	PRİZDİREK	INPUT SHAFT	L=109 SAE 2	(M)(R)(B)	◆	◆		
27	K20.00188	1316 202 026	(1316 302 079)	1	PRİZDİREK	INPUT SHAFT	L=117 SAE 2	(I)	◆	◆		
27	K20.00190	1316 202 038	(1316 302 091)	1	PRİZDİREK	INPUT SHAFT	L=109 SAE 2	(RVI)	◆	◆		
27	K20.00191	1316 221 017		1	PRİZDİREK	INPUT SHAFT		(NMV)	◆	◆		
27	K20.00189	1316 202 033		1	PRİZDİREK	INPUT SHAFT		(WSK)	◆	◆		
28	K20.00111	1297 304 436		9	PRİZ.veYILDIZ DİŞLİ FİŞEĞİ	PRESSURE PIECE			◆	◆		
29	K20.00110	0732 040 409		9	PRİZ.ve YILDIZ DİŞLİ YAYI	SPRING			◆	◆		
30	K20.01745	1295 298 956		kit	YAY FİŞEK TAKIMI	REPAIR KIT			◆	◆		
31	K20.01504	1315 302 196		1	PRİZDİREK YAĞ PİPETİ	OIL PIPET			◆	◆		
32	K20.01505	0630 502 027		1	PRİZDİREK YAĞ PİPETİ SEGM.	RETAINING RING	50x2mm		◆	◆		
33	K20.01011	0501 314 060	(0750 101 179)	1	PRİZDİREK ARKA KEÇE	OIL SEAL			◆	◆		
34	K20.00098	1310 304 202	(1310 304 174)	1	TAKVİYE VİTES SENK.HALKA	ENGAGING SLEEVE			◆	◆		
			(1312 302 057)									
			(1297 304 448)									
35	K20.01561	1499 298 027		1	EMN.SACI VE P.KİLİT TAK.	SPLIT RING KIT	5.00mm		◆	◆		
35	K20.01563	1499 298 026		1	EMN.SACI VE P.KİLİT TAK.	SPLIT RING KIT	4.90mm		◆	◆		
35	K20.01580	2001580		1	EMN.SACI VE P.KİLİT TAK.	SPLIT RING KIT	4.85mm		◆	◆		
35	K20.01565	1499 298 025		1	EMN.SACI VE P.KİLİT TAK.	SPLIT RING KIT	4.80mm		◆	◆		
35	K20.01567	1499 298 024		1	EMN.SACI VE P.KİLİT TAK.	SPLIT RING KIT	4.70mm		◆	◆		
35	K20.01569	1499 298 023		1	EMN.SACI VE P.KİLİT TAK.	SPLIT RING KIT	4.60mm		◆	◆		
36	K20.01571	0730 062 781		1	P. KİLİT EMNİYET SACI	RETAINING RING			◆	◆		
37	K20.01562	0730 107 023		2	PARÇALI KİLİT	SPLIT RING	5.00mm		◆	◆		
37	K20.01564	0730 107 022		2	PARÇALI KİLİT	SPLIT RING	4.90mm		◆	◆		
37	K20.01581	2001581		2	PARÇALI KİLİT	SPLIT RING	4.85mm		◆	◆		
37	K20.01566	0730 107 021		2	PARÇALI KİLİT	SPLIT RING	4.80mm		◆	◆		
37	K20.01568	0730 107 020		2	PARÇALI KİLİT	SPLIT RING	4.70mm		◆	◆		
37	K20.01570	0730 107 019		2	PARÇALI KİLİT	SPLIT RING	4.60mm		◆	◆		
38	K20.01109	0750 117 232	(0735 371 563)	1	KAMALI MİL UÇ BİLYA	ROLLER BEARING	42x40.3mm		◆	◆		
39	K20.01781	1315 304 051		1	KAMALI MİL UÇ BİLYA PULU	THRUST WASHER	8.30mm		◆	◆		
39	K20.01527	1315 304 048		1	KAMALI MİL UÇ BİLYA PULU	THRUST WASHER	8.00mm		◆	◆		
39	K20.01528	1315 304 047		1	KAMALI MİL UÇ BİLYA PULU	THRUST WASHER	7.90mm		◆	◆		
39	K20.01529	1315 304 046		1	KAMALI MİL UÇ BİLYA PULU	THRUST WASHER	7.80mm		◆	◆		
39	K20.01762	1315 304 045		1	KAMALI MİL UÇ BİLYA PULU	THRUST WASHER	7.70mm		◆	◆		
39	K20.01763	1315 304 044		1	KAMALI MİL UÇ BİLYA PULU	THRUST WASHER	7.60mm		◆	◆		
39	K20.01764	1315 304 043		1	KAMALI MİL UÇ BİLYA PULU	THRUST WASHER	7.50mm		◆	◆		
39	K20.01765	1315 304 085		1	KAMALI MİL UÇ BİLYA PULU	THRUST WASHER	7.40mm		◆	◆		
39	K20.01766	1315 304 086		1	KAMALI MİL UÇ BİLYA PULU	THRUST WASHER	7.30mm		◆	◆		
40	K20.01533	0750 101 158		2	4.VİTES ÇANAK ALIN PULU	THRUST WASHER			◆	◆		
41	K20.00388	0750 119 124		1	4.VİT.MAS.BİLYA ÇANAĞI	BEARING RACE	67x77x66.10mm		◆	◆		

NOTES :

X1,X2 are used conjunction with the encoded parts.
Alphabetical Coding has been done according to Input Shaft

X1 : 16 S 221 SG, 16 S 2280 TO, 16 S 2320 TO, 16 S 2321 TO
16 S 2322 TO, 16 S 2325 TO, 16 S 2330 TO, 16 S 2520 TO, 16 S 2521 TO
16 S 2522 TO, 16 S 2525 TO, 16 S 2720 TO, 16 S 2721 TO

X2 : 16 S 221 DG, 16 S 2280 TD, 16 S 2320 TD, 16 S 2321 TD
16 S 2322 TD, 16 S 2325 TD, 16 S 2330 TD, 16 S 2520 TD, 16 S 2521 TD
16 S 2522 TD, 16 S 2525 TD, 16 S 2720 TD

NOTLAR :

X1,X2 ile kodlanan parçalar birlikte kullanılır.
Alfabetik kodlamalar prizdireklere göre yapılmıştır.

X1 : 16 S 221 SG, 16 S 2280 TO, 16 S 2320 TO, 16 S 2321 TO
16 S 2322 TO, 16 S 2325 TO, 16 S 2330 TO, 16 S 2520 TO, 16 S 2521 TO
16 S 2522 TO, 16 S 2525 TO, 16 S 2720 TO, 16 S 2721 TO

X2 : 16 S 221 DG, 16 S 2280 TD, 16 S 2320 TD, 16 S 2321 TD
16 S 2322 TD, 16 S 2325 TD, 16 S 2330 TD, 16 S 2520 TD, 16 S 2521 TD
16 S 2522 TD, 16 S 2525 TD, 16 S 2720 TD

Original parts names, oem numbers, symbols and descriptions used in this catalogue are for reference purposes only.

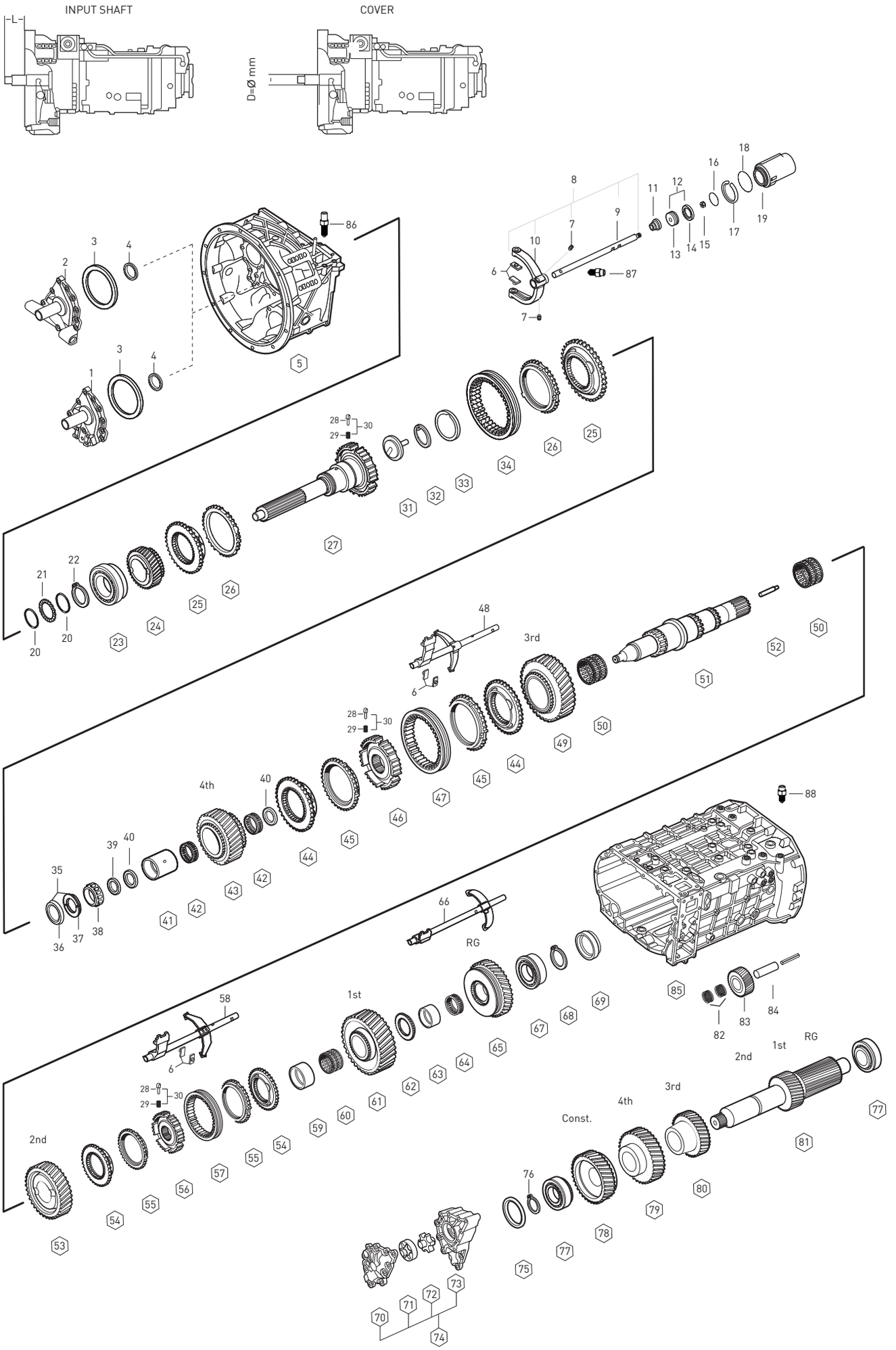

Original parts names, oem numbers, symbols and descriptions used in this catalogue are for reference purposes only.

Fig.	Kacmaz No.	Oem No	Oem Old No	Pcs.	Ürün Tanımı	Description	Sizes	Not	[X1]:SG-TO 13.80-0.84	[X2]:DG-TD 16.41-1.00		
42	K20.01303	0750 115 531	(0750 115 534)	2	4.VİT.DİŞLİ MASURA BİLYA	NEEDLE CAGE	77x101x29mm		◆	◆		
43	K20.00208	1316 304 103		1	4.VİTES DİŞLİSİ 32 DİŞ	GEAR 4th 32 T			◆	◆		
44	K20.00102	1316 304 159	(1316 304 145)	2	3./ 4.VİT.SENKROMENÇ	ENGAGING RING			◆	◆		
44	K20.00881	1316 304 190		2	3./ 4.VİT.SENKROMENÇ	ENGAGING RING	NEW		◆	◆		
45	K20.00109	1316 304 168	(1316 304 149)	2	3./ 4.VİT.SENK.FRENLEME	SYNCHRONIZING CONE			◆	◆		
45	K20.00880	1316 304 189		2	3./ 4.VİT.SENK.FRENLEME	SYNCHRONIZING CONE	NEW		◆	◆		
46	K20.00136	1316 304 162		1	3./ 4.VİT.YILDIZ DİŞLİ	GUIDE SLEEVE			◆	◆		
46	K20.00898	1356 304 019		1	3./ 4.VİT.YILDIZ DİŞLİ	GUIDE SLEEVE	NEW		◆	◆		
47	K20.00103	1316 304 167	(0769 186 281)	1	3./ 4.VİT.SENK.HALKA	ENGAGING SLEEVE			◆	◆		
			(1297 304 515)									
			(1315 304 135)									
47	K20.00871	1356 304 023	(1316 304 188)	1	3./ 4.VİT.SENK.HALKA	ENGAGING SLEEVE	NEW		◆	◆		
48		1316 206 058		1	3./4.VİTES HİLALİ	GEAR SHIFT FORK 3rd/4th			◆	◆		
49	K20.00211	1316 304 008		1	3.VİTES DİŞLİSİ 34 DİŞ	GEAR 3rd 34 T			◆	◆		
50	K20.01326	0750 115 303	(0735 321 094)	2	2./3.VİTES MASURA BİLYA	NEEDLE CAGE	92x100x63mm		◆	◆		
51	K20.00301	1316 304 132		1	KAMALI MİL	MAIN SHAFT			◆	◆		
52	K20.01506	1324 304 014	(1312 304 150)	1	KAMALI MİL YAĞ BORUSU	OIL PIPE			◆	◆		
53	K20.00213	1316 304 002		1	2.VİTES DİŞLİSİ 38 DİŞ	GEAR 2nd 38 T			◆	◆		
54	K20.00183	1316 304 156		2	1./ 2.VİTES SENKROMENÇ	ENGAGING RING			◆	◆		
54	K20.00910	1316 304 146		2	1./ 2.VİTES SENKROMENÇ	ENGAGING RING			◆	◆		
55	K20.00113	1316 304 170	(1316 304 150)	2	1./ 2.VİT.SENK.FRENLEME	SYNCHRONIZING CONE			◆	◆		
56	K20.00180	1316 304 163	(1316 304 148)	1	1./ 2.VİT.YILDIZ DİŞLİ	GUIDE SLEEVE			◆	◆		
56	K20.00889	1356 304 022		1	1./ 2.VİT.YILDIZ DİŞLİ	GUIDE SLEEVE	NEW		◆	◆		
57	K20.00114	1316 304 169	(1315 304 136)	1	1./ 2.VİT.SENK.HALKA	ENGAGING SLEEVE			◆	◆		
57	K20.00803	1356 304 024		1	1./ 2.VİT.SENK.HALKA	ENGAGING SLEEVE	NEW		◆	◆		
58		1316 206 055		1	1./2.VİTES HİLALİ	GEAR SHIFT FORK 1st/2nd			◆	◆		
59	K20.00389	1312 304 084		1	1.VİTES MAS.BİLYA ÇANAĞI	BEARING RACE			◆	◆		
60	K20.01328	0750 115 327		1	1.VİTES MASURA BİLYA	NEEDLE CAGE	96x104x72mm		◆	◆		
61	K20.00420	1316 304 010		1	1.VİTES DİŞLİSİ 47 DİŞ	GEAR 1st 47 T			◆	◆		
62	K20.00393	1315 304 018		1	GERİ VİTES YILDIZ DİŞLİ	HUB			◆	◆		
63	K20.00422	1316 304 133	(1312 304 082)	1	GERİ VİT.MAS.BİLYA ÇANAĞI	BEARING RACE			◆	◆		
64	K20.01330	0750 115 326		1	GERİ VİTES MASURA BİLYA	NEEDLE CAGE	90x98x50mm		◆	◆		
65	K20.00423	1316 304 012	(1316 304 235)	1	GERİ VİTES DİŞLİSİ 44 DİŞ	REVERSE GEAR 44 T			◆	◆		
66		1316 206 061		1	GERİ VİTES HİLALİ	GEAR SHIFT FORK/RG			◆	◆		
67	K20.01121	0750 117 678		1	KAMALI MİL ARKA BİLYA	ROLLER BEARING	80x140x36.50mm		◆	◆		
68	K20.02151	0630 501 339		1	K.MİL ARKA BİLYA SEGMANI	RETAINING RING	80x3.65mm		◆	◆		
68		0630 501 338		1	K.MİL ARKA BİLYA SEGMANI	RETAINING RING	80x3.60mm		◆	◆		
68	K20.02146	0630 501 316		1	K.MİL ARKA BİLYA SEGMANI	RETAINING RING	80x3.50mm		◆	◆		
68	K20.02147	0630 501 315		1	K.MİL ARKA BİLYA SEGMANI	RETAINING RING	80x3.40mm		◆	◆		
68	K20.02141	0630 501 314		1	K.MİL ARKA BİLYA SEGMANI	RETAINING RING	80x3.30mm		◆	◆		
68	K20.02148	0630 501 313		1	K.MİL ARKA BİLYA SEGMANI	RETAINING RING	80x3.20mm		◆	◆		

NOTES :

X1,X2 are used conjunction with the encoded parts.
Alphabetical Coding has been done according to Input Shaft

X1 : 16 S 221 SG, 16 S 2280 TO, 16 S 2320 TO, 16 S 2321 TO
16 S 2322 TO, 16 S 2325 TO, 16 S 2330 TO, 16 S 2520 TO, 16 S 2521 TO
16 S 2522 TO, 16 S 2525 TO, 16 S 2720 TO, 16 S 2721 TO

X2 : 16 S 221 DG, 16 S 2280 TD, 16 S 2320 TD, 16 S 2321 TD
16 S 2322 TD, 16 S 2325 TD, 16 S 2330 TD, 16 S 2520 TD, 16 S 2521 TD
16 S 2522 TD, 16 S 2525 TD, 16 S 2720 TD

NOTLAR :

X1,X2 ile kodlanan parçalar birlikte kullanılır.
Alfabetik kodlamalar prizdireklere göre yapılmıştır.

X1 : 16 S 221 SG, 16 S 2280 TO, 16 S 2320 TO, 16 S 2321 TO
16 S 2322 TO, 16 S 2325 TO, 16 S 2330 TO, 16 S 2520 TO, 16 S 2521 TO
16 S 2522 TO, 16 S 2525 TO, 16 S 2720 TO, 16 S 2721 TO

X2 : 16 S 221 DG, 16 S 2280 TD, 16 S 2320 TD, 16 S 2321 TD
16 S 2322 TD, 16 S 2325 TD, 16 S 2330 TD, 16 S 2520 TD, 16 S 2521 TD
16 S 2522 TD, 16 S 2525 TD, 16 S 2720 TD

Original parts names, oem numbers, symbols and descriptions used in this catalogue are for reference purposes only.

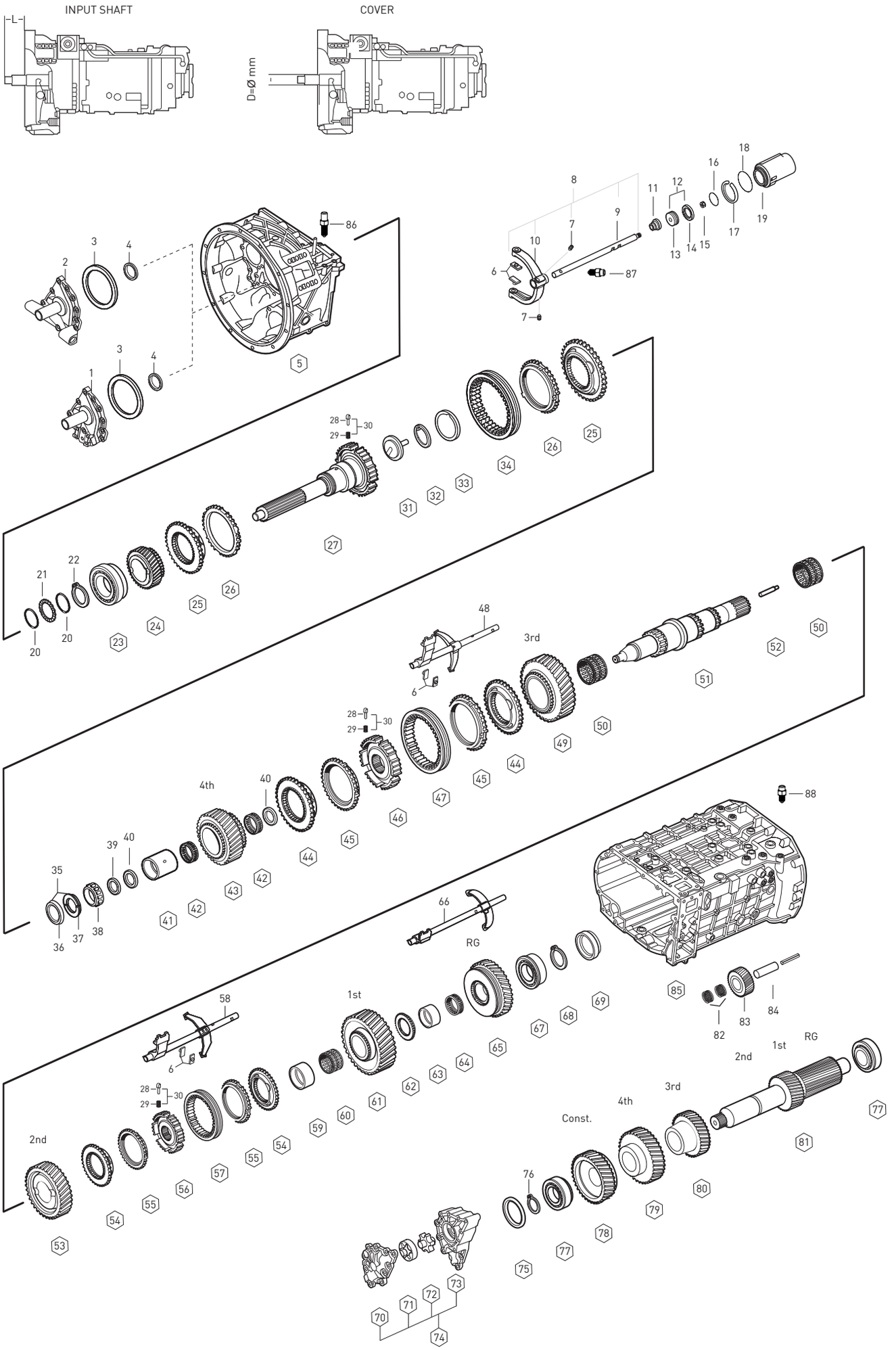

Original parts names, oem numbers, symbols and descriptions used in this catalogue are for reference purposes only.

Fig.	Kacmaz No.	Oem No	Oem Old No	Pcs.	Ürün Tanımı	Description	Sizes	(X1):SG-TO 1380-0.84	(X2):DG-TD 1641-1.00
68		0630 501 333		1	K.MİL ARKA BİLYA SEGMANI	RETAINING RING	80x3.15mm	◆	◆
68		0630 501 312		1	K.MİL ARKA BİLYA SEGMANI	RETAINING RING	80x3.10mm	◆	◆
69	K20.01593	1315 332 073	(1316 332 108)	1	KAMALI MİL ARKA PUL	WASHER		◆	◆
70	K20.00568	1315 302 120	(1315 302 116)	1	ŞANZ.YAĞ POMPA KAPAĞI	PUMP COVER		◆	◆
			(1315 402 120)						
71	K20.00542	1314 202 039		1	YAĞ POMPA İÇ ROTOR	OIL PUMP GEAR		◆	◆
72	K20.00543	1315 303 027		1	YAĞ POMPA DIŞ ROTOR	ROTOR		◆	◆
73	K20.00569	1315 302 121	(1315 302 117)	1	ŞANZ.YAĞ POMPA GÖVDESİ	PUMP HOUSING		◆	◆
			(1315 402 121)						
74	K20.00570	2000570		kit	ŞANZ.YAĞ POMPASI KOMPLE	OIL PUMP ASSY.		◆	◆
75	K20.01674	0730 106 917		1	G.MİLİ ÖN BİLYA RAYNELİ	SHIM	3.00mm	◆	◆
75		0730 106 916		1	G.MİLİ ÖN BİLYA RAYNELİ	SHIM	2.95mm	◆	◆
75	K20.01751	0730 106 915		1	G.MİLİ ÖN BİLYA RAYNELİ	SHIM	2.90mm	◆	◆
75	K20.01750	0730 106 913		1	G.MİLİ ÖN BİLYA RAYNELİ	SHIM	2.80mm	◆	◆
75	K20.01749	0730 106 911		1	G.MİLİ ÖN BİLYA RAYNELİ	SHIM	2.70mm	◆	◆
75	K20.01675	0730 106 909		1	G.MİLİ ÖN BİLYA RAYNELİ	SHIM	2.60mm	◆	◆
75	K20.01748	0730 100 799		1	G.MİLİ ÖN BİLYA RAYNELİ	SHIM	2.50mm	◆	◆
75	K20.01747	0730 100 801		1	G.MİLİ ÖN BİLYA RAYNELİ	SHIM	2.40mm	◆	◆
75	K20.01746	0730 100 803		1	G.MİLİ ÖN BİLYA RAYNELİ	SHIM	2.30mm	◆	◆
75	K20.01676	0730 101 467		1	G.MİLİ ÖN BİLYA RAYNELİ	SHIM	2.20mm	◆	◆
75		0730 101 469		1	G.MİLİ ÖN BİLYA RAYNELİ	SHIM	2.10mm	◆	◆
75	K20.01739	0730 106 906		1	G.MİLİ ÖN BİLYA RAYNELİ	SHIM	1.90mm	◆	◆
75	K20.01752	2001752		1	G.MİLİ ÖN BİLYA RAYNELİ	SHIM	0.50mm	◆	◆
75	K20.01778	2001778		1	G.MİLİ ÖN BİLYA RAYNELİ	SHIM	0.30mm	◆	◆
75	K20.01679	2001679		1	G.MİLİ ÖN BİLYA RAYNELİ	SHIM	0.20mm	◆	◆
75	K20.01680	2001680		1	G.MİLİ ÖN BİLYA RAYNELİ	SHIM	0.10mm	◆	◆
76		0631 531 065		1	G.MİLİ ÖN BİLYA RAYNELİ	RETAINING RING	50x3mm	◆	◆
77	K20.01126	0750 117 009	(0735 372 156)	2	G.MİLİ ÖN VE ARKA BİLYA	ROLLER BEARING	49.20x103.10x43.60mm	◆	◆
78	K20.00199	1316 303 071	(1316 303 064)	1	TAK.DİŞLİ KARŞILIĞI 32 DİŞ	CONST GEAR 32 T		◆	
78	K20.00200	1316 303 030		1	TAK.DİŞLİ KARŞILIĞI 39 DİŞ	CONST GEAR 39 T			◆
79	K20.00203	1316 303 065		1	4.VİT. DİŞLİ KARŞILIĞI 35 DİŞ	GEAR 4th 35 T		◆	◆
80	K20.00206	1316 303 005		1	3.VİT. DİŞLİ KARŞILIĞI 26 DİŞ	GEAR 3rd 26 T		◆	◆
81	K20.00424	1316 303 033		1	GRUP MİLİ 17-20 DİŞ	COUNTER SHAFT 17-20 T		◆	◆
82	K20.01338	0750 115 369		2	K.GERİ VİT. MASURA BİLYA	NEEDLE CAGE	45x57x25mm	◆	◆
83	K20.00656	1316 305 001	(1316 305 008)	1	K.GERİ VİTES DİŞLİSİ 22 DİŞ	REV.IDLER GEAR 22 T		◆	◆
84	K20.00657	1316 201 029		1	KÜÇÜK GERİ VİTES PİMİ	PIN		◆	◆
85		1316 201 110		1	ŞANZIMAN ORTA GÖVDE	HOUSING		◆	◆
86	K20.00813	1324 207 004	(1315 207 014)	1	İSTİNATLAMA FİŞEĞİ	DETENT PLUNGER	168 N	◆	◆
87	K20.00819	1324 207 033	(1313 207 003)	1	İSTİNATLAMA FİŞEĞİ	DETENT PLUNGER	235 N	◆	◆
88	K20.00838	1324 207 035	(1313 207 005)	1	İSTİNATLAMA FİŞEĞİ	DETENT PLUNGER	145 N	◆	◆
			(1313 207 001)						

NOTES :

X1,X2 are used conjunction with the encoded parts.
Alphabetical Coding has been done according to Input Shaft

X1 : 16 S 221 SG, 16 S 2280 TO, 16 S 2320 TO, 16 S 2321 TO
16 S 2322 TO, 16 S 2325 TO, 16 S 2330 TO, 16 S 2520 TO, 16 S 2521 TO
16 S 2522 TO, 16 S 2525 TO, 16 S 2720 TO, 16 S 2721 TO

X2 : 16 S 221 DG, 16 S 2280 TD, 16 S 2320 TD, 16 S 2321 TD
16 S 2322 TD, 16 S 2325 TD, 16 S 2330 TD, 16 S 2520 TD, 16 S 2521 TD
16 S 2522 TD, 16 S 2525 TD, 16 S 2720 TD

NOTLAR :

X1,X2 ile kodlanan parçalar birlikte kullanılır.
Alfabetik kodlamalar prizdireklere göre yapılmıştır.

X1 : 16 S 221 SG, 16 S 2280 TO, 16 S 2320 TO, 16 S 2321 TO
16 S 2322 TO, 16 S 2325 TO, 16 S 2330 TO, 16 S 2520 TO, 16 S 2521 TO
16 S 2522 TO, 16 S 2525 TO, 16 S 2720 TO, 16 S 2721 TO

X2 : 16 S 221 DG, 16 S 2280 TD, 16 S 2320 TD, 16 S 2321 TD
16 S 2322 TD, 16 S 2325 TD, 16 S 2330 TD, 16 S 2520 TD, 16 S 2521 TD
16 S 2522 TD, 16 S 2525 TD, 16 S 2720 TD

Original parts names, oem numbers, symbols and descriptions used in this catalogue are for reference purposes only.

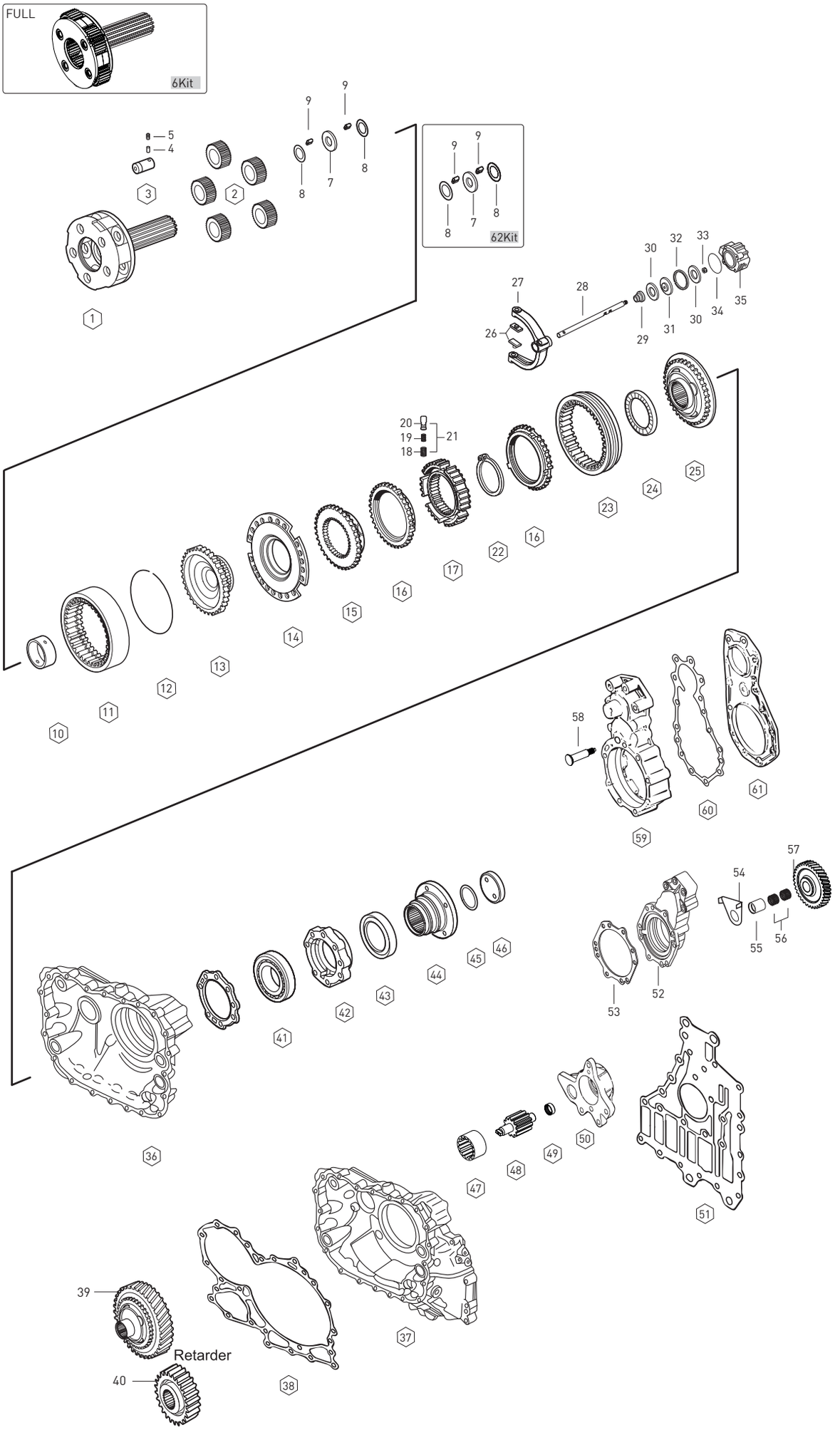

Original parts names, oem numbers, symbols and descriptions used in this catalogue are for reference purposes only.

Fig.	Kacmaz No.	Oem No	Oem Old No	Pcs.	Ürün Tanımı	Description	Sizes	Notes	(X1)	(X2)
1	K20.00658	1316 232 019		1	ŞANZIMAN HEYKELİ (BOŞ)	PLANETARY CARRIER		EMPTY	◆	
1	K20.00927	1316 232 039		1	ŞANZIMAN HEYKELİ (BOŞ)	PLANETARY CARRIER	NEW	EMPTY		◆
2	K20.00192	1316 232 011		1	HEYKEL KOZA DİŞLİ TK. 28 DİŞ	PLANET.GEAR SET 28 T			◆	◆
3	K20.00425	1316 332 096		5	HEYKEL KOZA DİŞLİ PİMİ	PLANET SHAFT			◆	
3	K20.01770	1316 332 140		5	HEYKEL KOZA DİŞLİ PİMİ	PLANET SHAFT	NEW			◆
4		0631 329 051		5	HEYKEL KOZA DİŞLİ PİM KİLİT PİM	LOCK PIN			◆	
4		0631 329 147		5	HEYKEL KOZA DİŞLİ PİM KİLİT PİMİ	LOCK PIN	NEW		◆	
5		0631 329 167		5	HEYKEL KOZA DİŞLİ PİM KİLİT PİM	LOCK PIN				◆
5		0631 329 261		5	HEYKEL KOZA DİŞLİ PİM KİLİT PİMİ	LOCK PIN	NEW			◆
6	K20.01063	1316 232 019		1	ŞANZIMAN HEYKELİ (DOLU)	PLANETARY CARRIER		FULL	◆	
6	K20.01065	1316 232 039		1	ŞANZIMAN HEYKELİ (DOLU)	PLANETARY CARRIER	NEW	FULL		◆
7	K20.01516	0730 109 309		5	HEYKEL KOZA DİŞLİ PULU	THRUST WASHER	7.90mm		◆	◆
8	K20.01515	0730 109 323		10	HEYKEL KOZA DİŞLİ PULU	THRUST WASHER	2.30mm		◆	◆
9	K20.01454	0750 119 116		140	HEYKEL KOZA DİŞLİ TANE BİLYA	NEEDLE ROLLER	10X16.8mm		◆	◆
10	K20.01578	1316 333 014		1	ŞANZIMAN HEYKEL BURCU	BUSHING			◆	◆
11	K20.00646	1315 332 041		1	ÇEMBER DİŞLİ 82 DİŞ	RING WHEEL 82T			◆	◆
12	K20.01690	0730 513 583		1	ÇEMBER DİŞLİ SEGMANI	SPRING RING	3.20mm		◆	◆
13	K20.00647	1316 332 130	(1316 332 103)	1	PLANET ÇAN DİŞLİ	CARRIER HUB	H=91.00mm		◆	◆
14	K20.00220	1296 333 046	(1296 333 039)	1	PLEYT	PLATE			◆	◆
15	K20.00074	1296 333 050		1	AĞIR SERİ SENKROMENÇ	ENGAGING RING			◆	◆
16	K20.00038	1296 333 045	(1296 333 022)	2	AĞIR SERİ SENK.FRENLEME	SYNCHRONIZING CONE			◆	◆
			(0769 174 091)							
17	K20.00185	1313 333 001		1	AĞIR SERİ YILDIZ DİŞLİ	GUIDE SLEEVE			◆	
18	K20.00469	0732 040 385		9	AĞIR SERİ YILDIZ DİŞLİ YAYI	SPRING			◆	◆
19	K20.00470	0732 040 386		9	AĞIR SERİ YILDIZ DİŞLİ YAYI	SPRING			◆	◆
20	K20.00471	1240 304 278		9	AĞIR SERİ YILDIZ DİŞLİ FİŞEĞİ	PRESSURE PIECE			◆	◆
21	K20.00474	1295 298 933		kit	A.SERİ YILDIZ DİŞLİ YAY FİŞEK TK.	REPAIR KIT			◆	◆
22		0630 501 061		1	AĞIR SERİ YILDIZ DİŞLİ SEGMANI	RETAINING RING	125x4.00mm		◆	◆
22	K20.00039	1296 333 023	(0769 186 286)	1	AĞIR SERİ SENKROMENÇ HALKA	ENGAGING SLEEVE			◆	
23	K20.00831	1316 333 034		1	AĞIR SERİ SENKROMENÇ HALKA	ENGAGING SLEEVE	NEW			◆
24	K20.01332	0735 298 169		1	SERİ SENK.ALIN MAS.BİLYA	NEEDLE BEARING	104.50X128.40X10mm		◆	◆
25	K20.00158	1316 233 015		1	SERİ SENKROMENÇ	ENGAGING RING			◆	
25	K20.00896	1316 233 029	(1316 233 011)	1	SERİ SENKROMENÇ	ENGAGING RING	NEW			◆
26	K20.00341	1296 334 004		2	AĞIR SERİ HİLAL PABUCU	SLIDING PAD			◆	◆
27		1315 334 039		1	AĞIR SERİ HİLALİ	GEAR SHIFT FORK			◆	◆
28	K20.00659	1316 334 016	(1316 334 010)	1	AĞIR SERİ HİLAL MİLİ	GEAR SHIFT RAIL			◆	◆
29	K20.01026	0750 112 253	(0750 112 131)	1	AĞIR SERİ HİLAL MİL KEÇESİ	FLANGE PACKING	25.0X40.0X15.0mm		◆	◆
30	K20.01019	0734 307 294	(0734 307 280)	2	AĞIR SERİ HAVA KEÇESİ	SEALING RING			◆	◆
31	K20.01773	1315 334 034		1	AĞIR SERİ HİLAL MİL PİSTONU	PISTON			◆	◆
32	K20.01657	0750 112 066		1	AĞIR SERİ HİLAL MİL FİBERİ	GUIDE RING	85.1X90.0X5.4mm		◆	◆
33	K20.01774	0737 006 095		1	AĞIR SERİ HİLAL MİL SOMUNU	NUT	M16X1.5mm		◆	◆

NOTES :

X1,X2 are used conjunction with the encoded parts.

X1 : 16 S 221 SG, 16 S 2280 TO, 16 S 2320 TO, 16 S 2321 TO
16 S 2322 TO, 16 S 2325 TO, 16 S 2330 TO, 16 S 2520 TO, 16 S 2521 TO
16 S 2522 TO, 16 S 2525 TO, 16 S 2720 TO, 16 S 2721 TO

X2 : 16 S 221 DG, 16 S 2280 TD, 16 S 2320 TD, 16 S 2321 TD
16 S 2322 TD, 16 S 2325 TD, 16 S 2330 TD, 16 S 2520 TD, 16 S 2521 TD
16 S 2522 TD, 16 S 2525 TD, 16 S 2720 TD

NOTLAR :

X1,X2 ile kodlanan parçalar birlikte kullanılır.

X1 : 16 S 221 SG, 16 S 2280 TO, 16 S 2320 TO, 16 S 2321 TO
16 S 2322 TO, 16 S 2325 TO, 16 S 2330 TO, 16 S 2520 TO, 16 S 2521 TO
16 S 2522 TO, 16 S 2525 TO, 16 S 2720 TO, 16 S 2721 TO

X2 : 16 S 221 DG, 16 S 2280 TD, 16 S 2320 TD, 16 S 2321 TD
16 S 2322 TD, 16 S 2325 TD, 16 S 2330 TD, 16 S 2520 TD, 16 S 2521 TD
16 S 2522 TD, 16 S 2525 TD, 16 S 2720 TD

Original parts names, oem numbers, symbols and descriptions used in this catalogue are for reference purposes only.

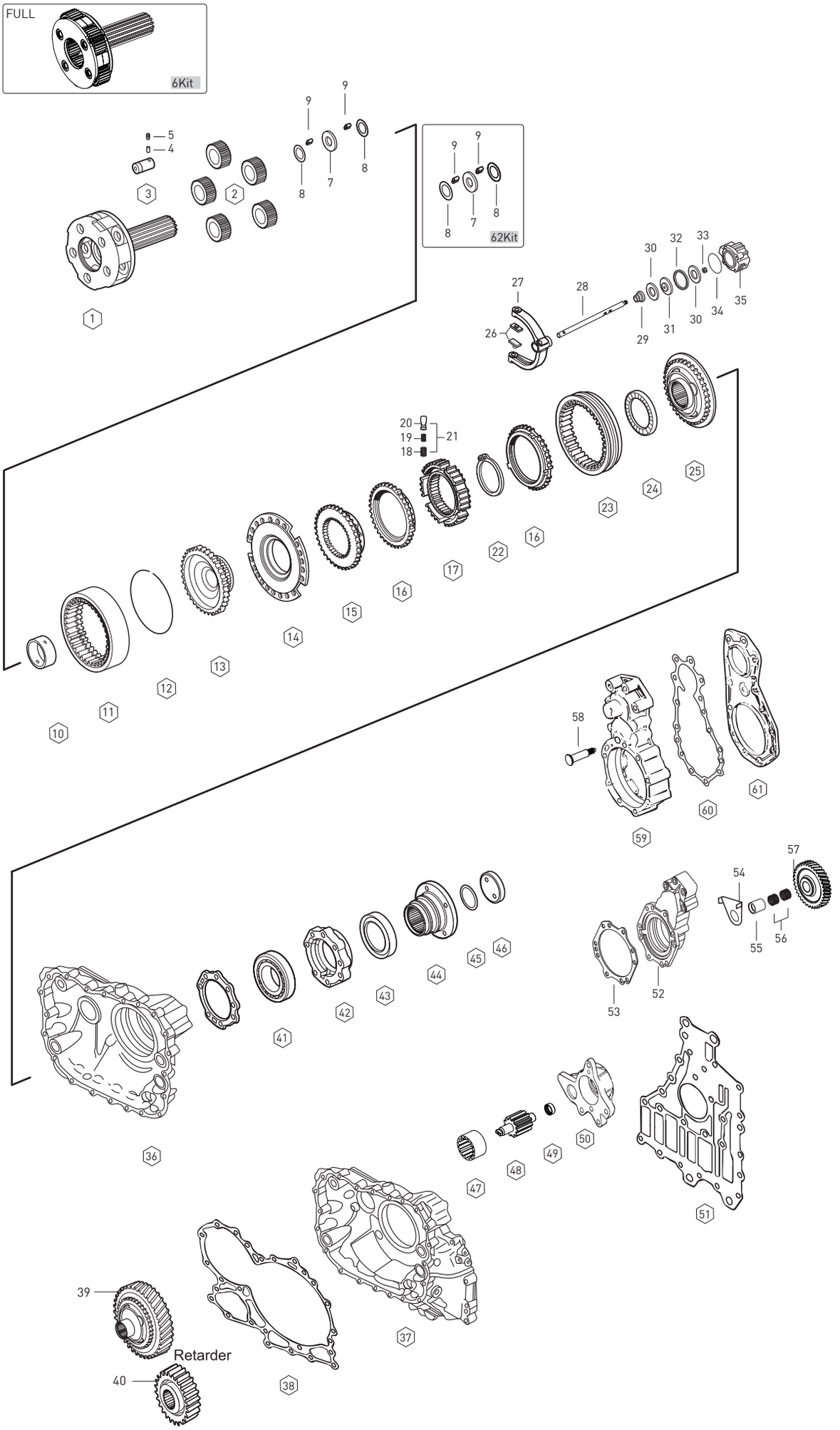

Original parts names, oem numbers, symbols and descriptions used in this catalogue are for reference purposes only.

Fig.	Kacmaz No.	Oem No	Oem Old No	Pcs.	Ürün Tanımı	Description	Sizes	Notes	(X1)	(X2)
34		0501 317 536		1	A.SERİ SİLİNDİR ORİNGİ	O-RING			◆	◆
35	K20.00842	1315 334 069	(1315 334 056)	1	AĞIR SERİ SİLİNDİR GÖVDESİ	CYLINDER			◆	◆
36		1315 201 224	(1315 301 223)	1	ŞANZIMAN ARKA GÖVDE	HOUSING			◆	◆
37		6085 201 079		1	ŞANZIMAN ARKA GÖVDE	HOUSING	RETARDER		◆	◆
38	K20.01733	0501 315 048	(0501 313 511)	1	ŞANZ.ARKA GÖVDE CONTASI	GASKET	RETARDER		◆	◆
39	K20.00403	1316 233 014		1	RETARDER DİŞLİSİ 59 DİŞ	GEAR 59 T	RETARDER		◆	
39	K20.00796	1316 233 028		1	RETARDER DİŞLİSİ 59 DİŞ	GEAR 59 T	RETARDER-NEW			◆
40	K20.00649	6085 301 012		1	RETARDER DİŞLİ KARŞILIĞI 29 DİŞ	GEAR 29 T	RETARDER		◆	◆
41	K20.01134	0750 116 394	(0750 116 002)	1	ŞANZIMAN ARKA BİLYA	ROLLER BEARING	90x160x30mm		◆	◆
			(0635 304 904)							
42		1315 231 004		1	ŞANZIMAN ARKA KEÇE KAPAĞI	COVER			◆	◆
43	K20.01013	0750 111 341		1	ŞANZIMAN ARKA KEÇE	OIL SEAL	105x130x12mm		◆	◆
43	K20.01022	0734 319 459	(0734 300 421)	1	ŞANZIMAN ARKA KEÇE	OIL SEAL	RETARDER		◆	◆
44	K20.00427	1297 333 110	(1315 333 048)	1	ŞANZIMAN FLANŞI	COMPANION FLANGE			◆	◆
44	K20.00453	1316 338 002		1	ŞANZIMAN FLANŞI	COMPANION FLANGE	RETARDER		◆	◆
45	K20.02113	0634 313 805		1	ŞANZIMAN FLANŞ ORİNGİ	O-RING	82x4mm		◆	◆
46	K20.01681	1312 332 028		1	ŞANZIMAN FLANŞ PULU	WASHER			◆	◆
47	K20.00804	6085 303 008		1	RETAR.POMPA DİŞLİSİ DIŞ ROTOR	RING GEAR			◆	◆
48	K20.00805	6085 203 001		1	RETAR.POMPA DİŞLİSİ İÇ ROTOR	SHAFT			◆	◆
49	K20.01472	0635 303 038		1	RETAR.POMPA MASURA BİLYA	NEEDLE CAGE			◆	◆
50	K20.00825	6085 303 011	(6085 403 011)	1	RETARDER POMPA GÖVDESİ	HOUSING			◆	◆
51	K20.02058	0501 314 434		1	RETARDER CONTASI	GASKET			◆	◆
52	K20.02080	6091 315 009		1	PTO KAPAĞI	COVER PTO			◆	◆
53		0501 331 906		1	PTO KAPAK CONTASI	GASKET			◆	◆
54	K20.02076	1304 313 058		1	GEZİNTİ PULU SACI	WASHER			◆	◆
55	K20.02170	0735 295 067		1	DİREKSİYON POMPA DİŞLİ BURCU	BUSHING			◆	◆
56	K20.01469	0735 320 885		2	DİREK.POMPA DİŞLİ MAS.BİLYA	NEEDLE CAGE			◆	◆
57		1304 313 063		1	DİREKSİYON POMPA DİŞLİSİ	IDLER GEAR			◆	◆
58	K20.01067	1304 313 057		1	DİREKSİYON POMPA PİMİ	PIN			◆	◆
59	K20.01823	6091 316 004		1	DİREKSİYON POMPA GÖVDESİ	HOUSING			◆	◆
60	K20.02145	1295 338 145		1	DİREK.POMPA GÖVDE CONTASI	GASKET			◆	◆
61	K20.01962	6091 303 018	(1295 338 091)	1	DİREK.POMPA GÖVDE KAPAĞI	COVER			◆	◆
62	K20.01744	2001744		kit	ŞANZ.HEYKELİ BİLYA VE PUL TK.-	REPAIR KIT			◆	◆

NOTES :

X1,X2 are used conjunction with the encoded parts.

X1 : 16 S 221 SG, 16 S 2280 TO, 16 S 2320 TO, 16 S 2321 TO
16 S 2322 TO, 16 S 2325 TO, 16 S 2330 TO, 16 S 2520 TO, 16 S 2521 TO
16 S 2522 TO, 16 S 2525 TO, 16 S 2720 TO, 16 S 2721 TO

X2 : 16 S 221 DG, 16 S 2280 TD, 16 S 2320 TD, 16 S 2321 TD
16 S 2322 TD, 16 S 2325 TD, 16 S 2330 TD, 16 S 2520 TD, 16 S 2521 TD
16 S 2522 TD, 16 S 2525 TD, 16 S 2720 TD

NOTLAR :

X1,X2 ile kodlanan parçalar birlikte kullanılır.

X1 : 16 S 221 SG, 16 S 2280 TO, 16 S 2320 TO, 16 S 2321 TO
16 S 2322 TO, 16 S 2325 TO, 16 S 2330 TO, 16 S 2520 TO, 16 S 2521 TO
16 S 2522 TO, 16 S 2525 TO, 16 S 2720 TO, 16 S 2721 TO

X2 : 16 S 221 DG, 16 S 2280 TD, 16 S 2320 TD, 16 S 2321 TD
16 S 2322 TD, 16 S 2325 TD, 16 S 2330 TD, 16 S 2520 TD, 16 S 2521 TD
16 S 2522 TD, 16 S 2525 TD, 16 S 2720 TD

Original parts names, oem numbers, symbols and descriptions used in this catalogue are for reference purposes only.

SYNCHRONIZER KIT CONST.

Fig.	Kacmaz No.	Oem No	Oem Old No	Pcs.	Ürün Tanımı	Description
	K20.00523	1312 204 031		Kit	TAKVİYE SENK.KİT	SYNCH.KIT 3rd/4th/Const.
1	K20.00101	1312 304 027		1	TAKVİYE SENKROMENÇ	ENGAGING RING
2	K20.00108	1297 304 484	(1297 304 402)	1	TAKVİYE FRENLEME	SYNCHRONIZING CONE

SYNCHRONIZER KIT CONST.

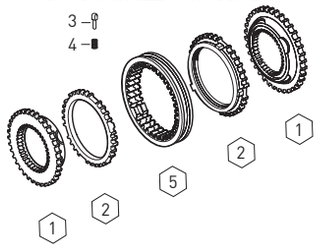

Fig.	Kacmaz No.	Oem No	Oem Old No	Pcs.	Ürün Tanımı	Description
	K20.00524	1315 298 030		kit	TAKVİYE SENKROMENÇ KİT	SYNCH.KIT 3rd/4th
1	K20.00101	1312 304 027		2	TAKVİYE SENKROMENÇ	ENGAGING RING
2	K20.00108	1297 304 484	(1297 304 402)	2	TAKVİYE SENK.FRENLEME	SYNCHRONIZING CONE
3	K20.00111	1297 304 436		3	TAKVİYE YILDIZ DİŞLİ FİŞEĞİ	PRESSURE PIECE
4	K20.00110	0732 040 409		3	TAKVİYE YILDIZ DİŞLİ YAYI	SPRING
5	K20.00098	1310 304 202	(1312 302 057)	1	TAKVİYE SENK.HALKA	ENGAGING SLEEVE

SYNCHRONIZER KIT 3rd/4th

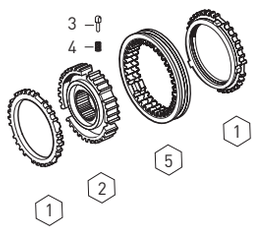

Fig.	Kacmaz No.	Oem No	Oem Old No	Pcs.	Ürün Tanımı	Description
	K20.00794	1316 204 016	(1316 204 014)	kit	3./4.VİT.FRENLEME KİTİ	SYNCH.KIT 3rd/4th
1	K20.00109	1316 304 168	(1316 304 149)	2	3./4.VİT.SENK.FRENLEME	SYNCHRONIZING CONE
2	K20.00136	1316 304 162		1	3./4.VİT.YILDIZ DİŞLİ	GUIDE SLEEVE
3	K20.00111	1297 304 436		3	3./4.VİT.YILDIZ DİŞLİ FİŞEĞİ	PRESSURE PIECE
4	K20.00110	0732 040 409		3	3./4.VİT.YILDIZ DİŞLİ YAYI	SPRING
5	K20.00103	1316 304 167	(1315 304 135)	1	3./4.VİT.SENK.HALKA	ENGAGING SLEEVE

SYNCHRONIZER KIT 3rd/4th

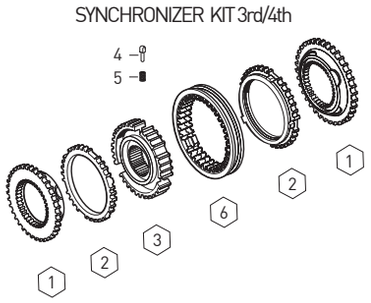

Fig.	Kacmaz No.	Oem No	Oem Old No	Pcs.	Ürün Tanımı	Description
	K20.00088	1315 298 061		Kit	3./4.VİT.SENKROMENÇ KİT	SYNCH.KIT 3rd/4th
1	K20.00102	1316 304 159	(1316 304 145)	2	3./4.VİT.SENKROMENÇ	ENGAGING RING
2	K20.00109	1316 304 168	(1316 304 149)	2	3./4.VİT.SENK.FRENLEME	SYNCHRONIZING CONE
3	K20.00136	1316 304 162		1	3./4.VİT.YILDIZ DİŞLİ	GUIDE SLEEVE
4	K20.00111	1297 304 436		3	3./4.VİT.YILDIZ DİŞLİ FİŞEĞİ	PRESSURE PIECE
5	K20.00110	0732 040 409		3	3./4.VİT.YILDIZ DİŞLİ YAYI	SPRING
6	K20.00103	1316 304 167	(1315 304 135)	1	3./4.VİT.SENK.HALKA	ENGAGING SLEEVE

SYNCHRONIZER KIT 3rd/4th

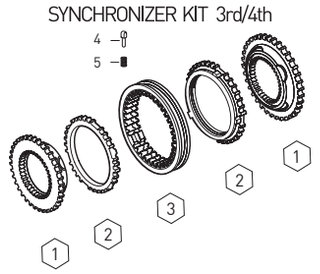

Fig.	Kacmaz No.	Oem No	Oem Old No	Pcs.	Ürün Tanımı	Description
	K20.00894	1315 298 067		Kit	3./4.VİT.SENKROMENÇ KİT	SYNCH.KIT 3rd/4th
1	K20.00102	1316 304 159	(1316 304 145)	2	3./4.VİT.SENKROMENÇ	ENGAGING RING
2	K20.00109	1316 304 168	(1316 304 149)	2	3./4.VİT.SENK.FRENLEME	SYNCH.CONE
3	K20.00103	1316 304 167	(1315 304 135)	1	3./4.VİT.SENK.HALKA	ENGAGING SLEEVE
4	K20.00111	1297 304 436		3	3./4.VİT.YILDIZ DİŞLİ FİŞEĞİ	PRESSURE PIECE
5	K20.00110	0732 040 409		3	3./4.VİT.YILDIZ DİŞLİ YAYI	SPRING

SYNCHRONIZER KIT 3rd/4th

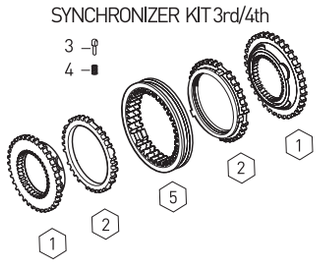

Fig.	Kacmaz No.	Oem No	Oem Old No	Pcs.	Ürün Tanımı	Description
	K20.00879	1325 298 008		Kit	3./4.VİT.SENKROMENÇ KİT	SYNCH.KIT 3rd/4th
1	K20.00881	1316 304 190		2	3./4.VİT.SENKROMENÇ	ENGAGING RING
2	K20.00880	1316 304 189		2	3./4.VİT.FRENLEME	SYNCH.CONE
3	K20.00111	1297 304 436		3	3./4.VİT.YILDIZ DİŞLİ FİŞEĞİ	PRESSURE PIECE
4	K20.00110	0732 040 409		3	3./4.VİT.YILDIZ DİŞLİ YAYI	SPRING
5	K20.00871	1356 304 023	(1316 304 188)	1	3./4.VİT.SENK.HALKA	ENGAGING SLEEVE

SYNCHRONIZER KIT 3rd/4th

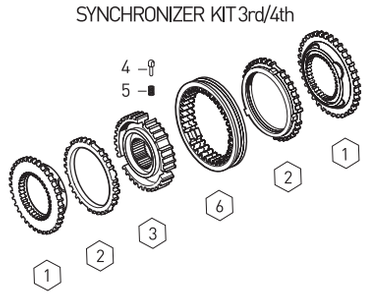

Fig.	Kacmaz No.	Oem No	Oem Old No	Pcs.	Ürün Tanımı	Description
	K20.01794	1356 204 006		Kit	3./4.VİT.SENKROMENÇ KİT	SYNCH.KIT 3rd/4th
1	K20.00881	1316 304 190		2	3./4.VİT.SENKROMENÇ	ENGAGING RING
2	K20.00880	1316 304 189		2	3./4.VİT.FRENLEME	SYNCH.CONE
3	K20.00898	1356 304 019		1	3./4.VİT.YILDIZ DİŞLİ	GUIDE SLEEVE
4	K20.00111	1297 304 436		3	3./4.VİT.YILDIZ DİŞLİ FİŞEĞİ	PRESSURE PIECE
5	K20.00110	0732 040 409		3	3./4.VİT.YILDIZ DİŞLİ YAYI	SPRING
6	K20.00871	1356 304 023	(1316 304 188)	1	3./4.VİT.SENK.HALKA	ENGAGING SLEEVE

Original parts names, oem numbers, symbols and descriptions used in this catalogue are for reference purposes only.

Fig.	Kacmaz No.	Oem No	Oem Old No	Pcs.	Ürün Tanımı	Description
	K20.00893	1315 298 066		Kit	1./2.VİT.SENKROMENÇ KİT	SYNCH.KIT 1st/2nd
1	K20.00183	1316 304 156		2	1./2.VİT.SENKROMENÇ	ENGAGING RING
2	K20.00113	1316 304 170	(1316 304 150)	2	1./2.VİT.FRENLEME	SYNCH.CONE
3	K20.00114	1316 304 169	(1315 304 136)	1	1./2.VİT.SENK.HALKA	ENGAGING SLEEVE
4	K20.00111	1297 304 436		3	1./2.VİT.YILDIZ DİŞLİ FİŞEĞİ	PRESSURE PIECE
5	K20.00110	0732 040 409		3	1./2.VİT.YILDIZ DİŞLİ YAYI	SPRING

SYNCHRONIZER KIT 1st/2nd

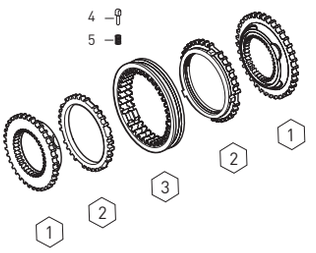

Fig.	Kacmaz No.	Oem No	Oem Old No	Pcs.	Ürün Tanımı	Description
	K20.01793	1356 204 007		Kit	1./2.VİT.SENKROMENÇ KİT	SYNCH.KIT 1st/2nd
1	K20.00183	1316 304 156		2	1./2.VİT.SENKROMENÇ	ENGAGING RING
2	K20.00113	1316 304 170	(1316 304 150)	2	1./2.VİT.FRENLEME	SYNCH.CONE
3	K20.00889	1356 204 022		1	1./2.VİT.YILDIZ DİŞLİ	GUIDE SLEEVE
4	K20.00111	1297 304 436		3	1./2.VİT.YILDIZ DİŞLİ FİŞEĞİ	PRESSURE PIECE
5	K20.00110	0732 040 409		3	1./2.VİT.YILDIZ DİŞLİ YAYI	SPRING
6	K20.00803	1356 304 024		1	1./2.VİT.SENK.HALKA	ENGAGING SLEEVE

SYNCHRONIZER KIT 1st/2nd

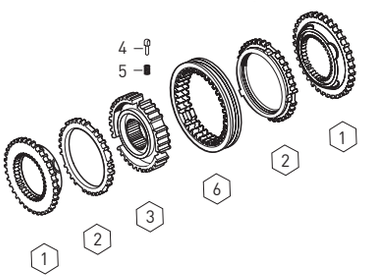

Fig.	Kacmaz No.	Oem No	Oem Old No	Pcs.	Ürün Tanımı	Description
	K20.00087	1315 298 060	(1316 204 017)	Kit	1./2.VİT.SENKROMENÇ KİT	SYNCH.KIT 1st/2nd
1	K20.00183	1316 304 156		2	1./2.VİT.SENKROMENÇ	ENGAGING RING
2	K20.00113	1316 304 170	(1316 304 150)	2	1./2.VİT.FRENLEME	SYNCH.CONE
3	K20.00180	1316 304 163	(1316 304 148)	1	1./2.VİT.YILDIZ DİŞLİ	GUIDE SLEEVE
4	K20.00111	1297 304 436		3	1./2.VİT.YILDIZ DİŞLİ FİŞEĞİ	PRESSURE PIECE
5	K20.00110	0732 040 409		3	1./2.VİT.YILDIZ DİŞLİ YAYI	SPRING
6	K20.00114	1316 304 169	(1315 304 136)	1	1./2.VİT.SENK.HALKA	ENGAGING SLEEVE

SYNCHRONIZER KIT 1st/2nd

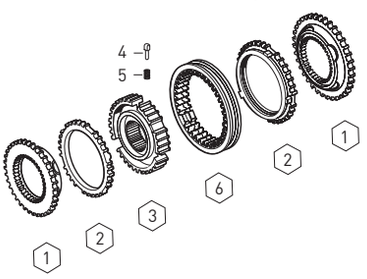

Fig.	Kacmaz No.	Oem No	Oem Old No	Pcs.	Ürün Tanımı	Description
	K20.00906	2000906		Kit	AĞIR SERİ SENK.KİT	SYNCHRONIZER KIT
1	K20.00074	1296 333 050		1	AĞIR SERİ SENKROMENÇ	ENGAGING RING
2	K20.00038	1296 333 045	(1296 333 022)	2	AĞIR SERİ FRENLEME	SYNCHRONIZING CONE
3	K20.00469	0732 040 385		9	AĞIR SERİ YILDIZ DİŞLİ YAYI	SPRING
4	K20.00470	0732 040 386		9	AĞIR SERİ YILDIZ DİŞLİ YAYI	SPRING
5	K20.00471	1240 304 278		9	AĞIR SERİ YILDIZ DİŞ.FİŞEĞİ	PRESSURE PIECE
6	K20.00831	1316 333 034		1	AĞIR SERİ SENK.HALKA	ENGAGING SLEEVE
7	K20.00896	1316 233 011	(1316 233 029)	1	SERİ SENKROMENÇ	ENGAGING RING

SYNCHRONIZER KIT PLANETARY

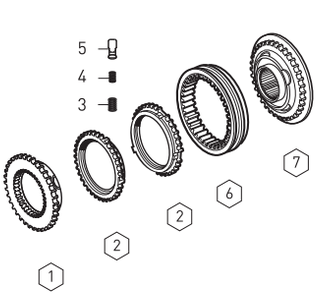

Fig.	Kacmaz No.	Oem No	Oem Old No	Pcs.	Ürün Tanımı	Description
	K20.00907	2000907		Kit	AĞIR SERİ SENK.KİT	SYNCHRONIZER KIT
1	K20.00074	1296 333 050		1	AĞIR SERİ SENKROMENÇ	ENGAGING RING
2	K20.00038	1296 333 045	(1296 333 022)	2	AĞIR SERİ FRENLEME	SYNCHRONIZING CONE
3	K20.00185	1313 333 001		1	AĞIR SERİ YILDIZ DİŞLİ	GUIDE SLEEVE
4	K20.00469	0732 040 385		9	AĞIR SERİ YILDIZ DİŞLİ YAYI	SPRING
5	K20.00470	0732 040 386		9	AĞIR SERİ YILDIZ DİŞLİ YAYI	SPRING
6	K20.00471	1240 304 278		9	AĞIR SERİ YILDIZ DİŞ.FİŞEĞİ	PRESSURE PIECE
7	K20.00831	1316 333 034		1	AĞIR SERİ SENK.HALKA	ENGAGING SLEEVE
8	K20.00896	1316 233 011	(1316 233 029)	1	SERİ SENKROMENÇ	ENGAGING RING

SYNCHRONIZER KIT PLANETARY

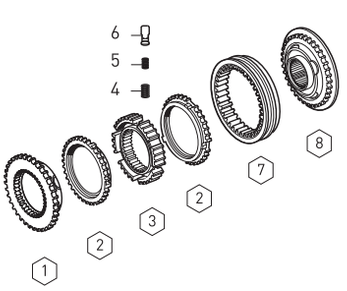

Original parts names, oem numbers, symbols and descriptions used in this catalogue are for reference purposes only.

SYNCHRONIZER KIT PLANETARY

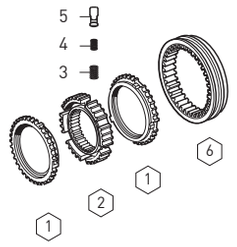

Fig.	Kacmaz No.	Oem No	Oem Old No	Pcs.	Ürün Tanımı	Description
	K20.00532	1315 233 029		Kit	AĞIR SERİ SENK.KİT	SYNCHRONIZER KIT
1	K20.00038	1296 333 045	(1296 333 022)	2	AĞIR SERİ FRENLEME	SYNCHRONIZING CONE
2	K20.00185	1313 333 001		1	AĞIR SERİ YILDIZ DİŞLİ	GUIDE SLEEVE
3	K20.00469	0732 040 385		9	AĞIR SERİ YILDIZ DİŞLİ YAYI	SPRING
4	K20.00470	0732 040 386		9	AĞIR SERİ YILDIZ DİŞLİ YAYI	SPRING
5	K20.00471	1240 304 278		9	AĞIR SERİ YILDIZ DİŞ.FİŞEĞİ	PRESSURE PIECE
6	K20.00039	1296 333 023		1	AĞIR SERİ SENK.HALKA	ENGAGING SLEEVE

SYNCHRONIZER KIT PLANETARY

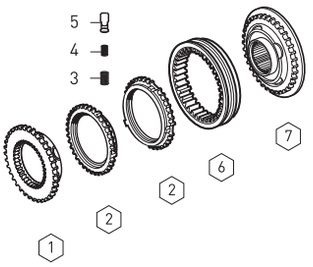

Fig.	Kacmaz No.	Oem No	Oem Old No	Pcs.	Ürün Tanımı	Description
	K20.00546	1315 298 034		Kit	AĞIR SERİ SENK.KİT	SYNCHRONIZER KIT
1	K20.00074	1296 333 050		1	AĞIR SERİ SENKROMENÇ	ENGAGING RING
2	K20.00038	1296 333 045	(1296 333 022)	2	AĞIR SERİ FRENLEME	SYNCHRONIZING CONE
3	K20.00469	0732 040 385		9	AĞIR SERİ YILDIZ DİŞLİ YAYI	SPRING
4	K20.00470	0732 040 386		9	AĞIR SERİ YILDIZ DİŞLİ YAYI	SPRING
5	K20.00471	1240 304 278		9	AĞIR SERİ YILDIZ DİŞ.FİŞEĞİ	PRESSURE PIECE
6	K20.00039	1296 333 023		1	AĞIR SERİ SENK.HALKA	ENGAGING SLEEVE
7	K20.00158	1316 233 015		1	SERİ SENKROMENÇ	ENGAGING RING

SYNCHRONIZER KIT PLANETARY

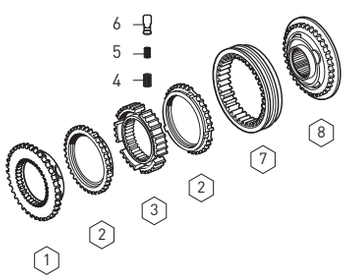

Fig.	Kacmaz No.	Oem No	Oem Old No	Pcs.	Ürün Tanımı	Description
	K20.00545	1315 298 029		Kit	AĞIR SERİ SENK.KİT	SYNCHRONIZER KIT
1	K20.00074	1296 333 050		1	AĞIR SERİ SENKROMENÇ	ENGAGING RING
2	K20.00038	1296 333 045	(1296 333 022)	2	AĞIR SERİ FRENLEME	SYNCHRONIZING CONE
3	K20.00185	1313 333 001		1	AĞIR SERİ YILDIZ DİŞLİ	GUIDE SLEEVE
4	K20.00469	0732 040 385		9	AĞIR SERİ YILDIZ DİŞLİ YAYI	SPRING
5	K20.00470	0732 040 386		9	AĞIR SERİ YILDIZ DİŞLİ YAYI	SPRING
6	K20.00471	1240 304 278		9	AĞIR SERİ YILDIZ DİŞ.FİŞEĞİ	PRESSURE PIECE
7	K20.00039	1296 333 023		1	AĞIR SERİ SENK.HALKA	ENGAGING SLEEVE
8	K20.00158	1316 233 015		1	SERİ SENKROMENÇ	ENGAGING RING

P.T.O. (POWER TAKE OFF)

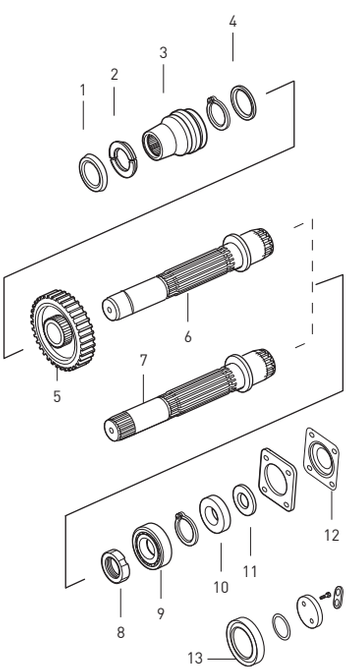

Fig.	Kacmaz No.	Oem No	Oem Old No	Pcs.	Ürün Tanımı	Description
1		1296 313 131		1	P.KİLİT EMNİYET SACI	RETAINING RING
2		0730 104 627		1	PARÇALI KİLİT	SPLIT RING
3		1296 313 238		1	PTO MİL KOVANI	SLIDING SLEEVE
4		0730 104 628		1	PTO DİŞLİ AYAR PULU	THRUST WASHER
5		1296 313 082		1	PTO DİŞLİ	GEAR 33 T
5		1296 313 083		1	PTO DİŞLİ	GEAR 36 T
5		1296 313 084		1	PTO DİŞLİ	GEAR 38 T
5		1296 313 085		1	PTO DİŞLİ	GEAR 39 T
5		1296 313 086		1	PTO DİŞLİ	GEAR 46 T
6	K20.00556	1296 213 028		1	PTO MİLİ DÜZ	INTERM.SHAFT
7	K20.00555	1296 213 028		1	PTO MİLİ FREZELİ	INTERM.SHAFT (Milled)
8		1296 313 125		1	PTO MİL SOMUNU	NUT
9		0735 410 139		1	PTO MİL BİLYASI	ROLLER BEARING
10		7429 032 102		1	PTO BİLYA KAPAK PULU	THRUST WASHER
11		1232 304 062		1	PTO BİLYA KAPAK RAYNELİ	SHIM (1.00mm)
11		1232 304 063		1	PTO BİLYA KAPAK RAYNELİ	SHIM (0.90mm)
11		1232 304 072		1	PTO BİLYA KAPAK RAYNELİ	SHIM (0.70mm)
12		1250 313 190		1	PTO BAĞLANTI KAPAĞI	COVER
13	K20.01013	0750 111 341		1	ŞANZ.ARKA KAPAK KEÇESİ	OIL SEAL

Original parts names, oem numbers, symbols and descriptions used in this catalogue are for reference purposes only.

GEARBOX GASKET KIT

Fig.	Kacmaz No.	Oem No	Oem Old No	Pcs.	Ürün Tanımı	Description
1	K20.01585	1315 298 001		Kit	ŞANZIMAN CONTA TAKIMI	GASKET KIT
2		1315 301 233		1	ŞANZ.ÖN GÖVDE CONTASI	GASKET
3		0501 314 246		1	PRİZ.KEÇE KAPAK CONTASI	GASKET
3		0501 314 587		1	PRİZ.KEÇE KAPAK CONTASI	GASKET
4		1316 301 042		2	ŞANZ.ARKA GÖVDE CONTASI	GASKET
4		1315 301 007		2	ŞANZ.ARKA GÖVDE CONTASI	GASKET
5		0501 318 308		2	ŞANZ.KULE KAPAK CONTASI	GASKET
6		1315 307 012		1	ŞANZ.KULESİ GÖVDE CONTASI	GASKET
7		1315 307 013		1	ŞANZ.KULE ALT KAPAK CONTASI	GASKET
8		0501 317 240		1	ŞANZ.KULE ÜST KAPAK CONTASI	GASKET
9		1315 331 001		1	ŞANZ.BİLYA KAPAK CONTASI	GASKET
10	K20.02108	1238 308 201		1	PTO BAĞLANTI KAPAK CONTASI	GASKET
11		0501 316 146		1	ŞANZ.DAMPER CONTASI	GASKET
11		1315 301 234		1	ŞANZ.DAMPER CONTASI	GASKET
12		1316 301 022		1	ŞANZ.MÜŞÜR KAPAK CONTASI	GASKET
13		1315 303 060		1	YAĞ POMPA CONTASI	GASKET
14		1315 307 242		1	SERVO KULE PİSTON CONTASI	GASKET

GEARBOX GASKET KIT

Fig.	Kacmaz No.	Oem No	Oem Old No	Pcs.	Ürün Tanımı	Description	Sizes
	K20.01039	1315 298 002		Kit	KEÇE TAKIMI	SEAL KIT	
1	K20.01037	0634 300 302	(0734 300 196)	1	KEÇE	OIL SEAL	25X35X7mm
2	K20.01036	0634 307 367		1	KEÇE	OIL SEAL	25X35X7/10mm
3	K20.01008	0734 310 104		1	PRİZDİREK KEÇESİ	OIL SEAL	52X68X8mm
4	K20.01034	0501 312 738	(0501 325 918)	4	KEÇE	OIL SEAL	30X37X4mm
5	K20.01035	0634 300 020		1	KEÇE	OIL SEAL	25X32X5mm
6	K20.01003	0734 310 387	(0734 310 311)	1	PRİZDİREK KEÇESİ	OIL SEAL	55X75X8mm
7	K20.01038	0734 309 765	(0734 309 376)	1	KEÇE	OIL SEAL	28X42X11mm
8	K20.01013	0750 111 341	(0734 319 551)	1	ŞANZ.FLANŞ KEÇESİ	OIL SEAL	105X130X12mm

GEARBOX GASKET KIT

Fig.	Kacmaz No.	Oem No	Oem Old No	Pcs.	Ürün Tanımı	Description	Sizes
	K20.01044	1315 298 003		kit	KEÇE TAKIMI	SEAL KIT	
1	K20.01016	0750 112 034		2	TAK.HİLAL MİL KEÇESİ	OIL SEAL	25X38X14.2mm
2	K20.01026	0750 112 131		2	HİLAL MİL KEÇESİ	OIL SEAL	25X40X15mm
3	K20.01019	0734 307 294	(0734 307 280)	2	A.SERİ HAVA KEÇESİ	OIL SEAL	50X91X7.5mm
4	K20.01024	0734 317 150	(0750 112 019)	2	A.SERİ HAVA KEÇESİ	OIL SEAL	80X90X4.8mm
5	K20.01779	0501 324 670		1	TAK.SİLİNDİR PİSTONU	PISTON	
6	K20.01657	0750 112 066	(0501 307 769)	1	A.SERİ HİLAL MİL FİBERİ	RING	85X90X5.5mm
7	K20.01020	0750 112 177		1	SİLİNDİR HAVA KEÇESİ	OIL SEAL	55X63X9.4mm
8		0634 801 062		12	ALM.PUL	SEAL RING	18X24X1.4mm
9		0634 801 097		1	ALM.PUL	WASHER	30X36mm
10		0634 801 173		5	ALM.PUL	WASHER	22X27mm
11		0634 801 203		1	ALM.PUL	SEAL RING	16X22X1.4mm
12		0634 801 206		5	ALM.PUL	SEAL RING	24X29mm
13		0634 801 219		2	ALM.PUL	SEAL RING	16X22X1.4mm
14		0634 801 249		1	ALM.PUL	SEAL RING	
15		0634 801 321		1	ALM.PUL	WASHER	
16		0730 008 055		1	ALM.PUL	WASHER	
17		0730 008 056		1	ALM.PUL	WASHER	
18		0730 008 057		8	ALM.PUL	WASHER	
19		0734 303 046		1	ORİNG	O-RING	
20		0634 314 020		4	ORİNG	O-RING	
21		0634 313 198		1	ORİNG	O-RING	
22		0634 313 293		1	ORİNG	O-RING	
23		0634 313 320		1	ORİNG	O-RING	
24		0634 313 018		1	ORİNG	O-RING	
25		0634 313 505		1	ORİNG	O-RING	
26		0634 314 015		1	ORİNG	O-RING	
27	K20.02113	0634 313 805		1	ORİNG	O-RING	
28		0634 314 021		2	ORİNG	O-RING	
29		0634 312 523		1	LASTİK KEÇE	RING	
30		0501 317 536		1	KANALLI ORİNG	RING	

Original parts names, oem numbers, symbols and descriptions used in this catalogue are for reference purposes only.

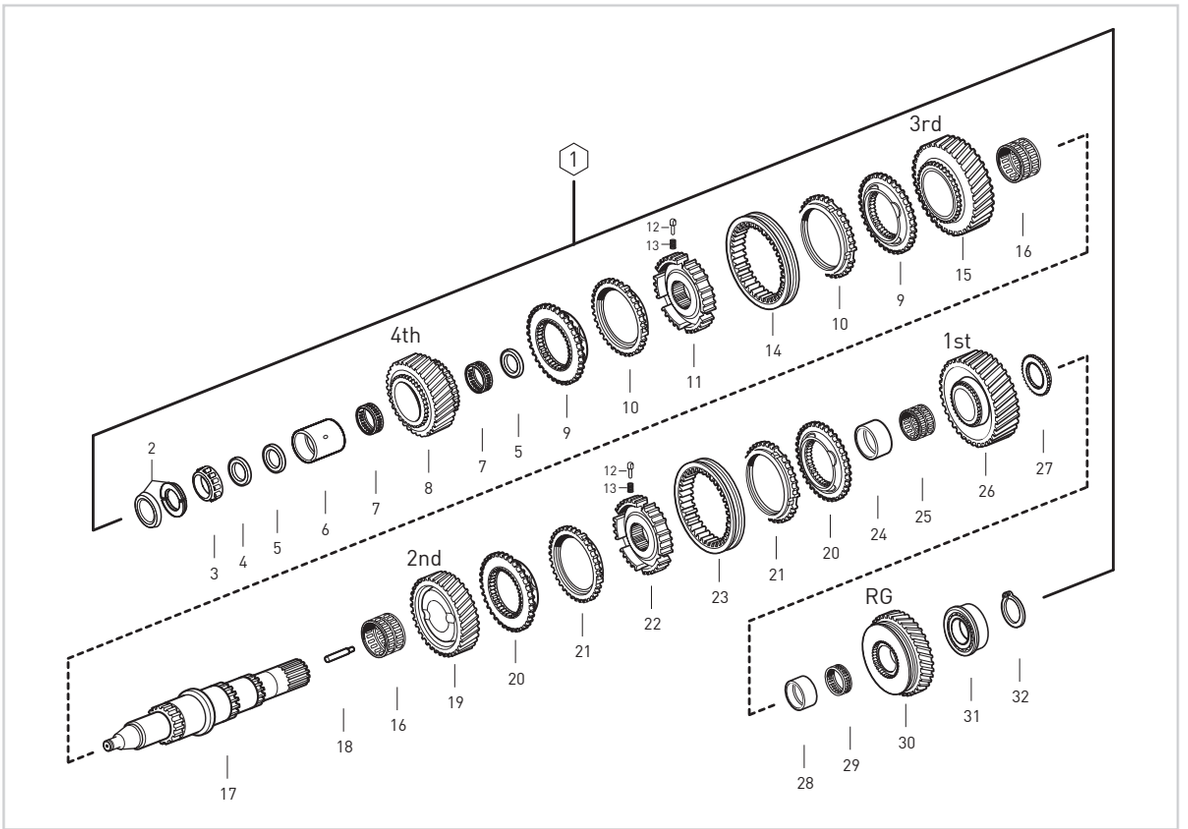

Fig.	Kacmaz No.	Oem No	Oem Old No	Pcs.	Ürün Tanımı	Description	Sizes
1	K20.00860	1316 104 039		kit	KAMALI MİL KOMPLE	MAIN SHAFT COMPLETE	
2	K20.01565	1499 298 025		1	EMN.SACI ve KİLİT TAK.	SPLIT RING KIT	4.80mm
3	K20.01109	0750 117 232	(0735 371 563)	1	KAMALI MİL UÇ BİLYA	ROLLER BEARING	
4	K20.01527	1315 304 048		1	KAMALI MİL UÇ BİLYA PULU	THRUST WASHER	8.00mm
5	K20.01533	0750 101 158		2	4.VİT.ÇANAK ALIN PULU	THRUST WASHER	
6	K20.00388	0750 119 124		1	4.VİT.MASURA BİLYA ÇANAĞI	BEARING RACE	
7	K20.01303	0750 115 531	(0750 115 534)	2	4.VİT.DİŞLİ MASURA BİLYA	NEEDLE CAGE	77X101X29mm
8	K20.00208	1316 304 103		1	4.VİTES DİŞLİSİ 32 DİŞ	GEAR 4th. 32 T	
9	K20.00102	1316 304 159	(1316 304 145)	2	3./4.VİTES SENKROMENÇ	ENGAGING RING	
10	K20.00109	1316 304 168	(1316 304 149)	2	3./ 4.VİT.SENK.FRENLEME	SYNCHRONIZING CONE	
11	K20.00136	1316 304 162	(1316 304 147)	1	3./4.VİTES YILDIZ DİŞLİ	GUIDE SLEEVE	
12	K20.00111	1297 304 436		6	YILDIZ DİŞLİ FİŞEĞİ	PRESSURE PIECE	
13	K20.00110	0732 040 409		6	YILDIZ DİŞLİ YAYI	SPRING	
14	K20.00103	1316 304 167	(0769 186 281)	1	3./4.VİT.SENK.HALKA	ENGAGING SLEEVE	
			(1297 304 515)				
			(1315 304 135)				
15	K20.00211	1316 304 008		1	3.VİTES DİŞLİSİ 34 DİŞ	GEAR 3rd. 34 T	
16	K20.01326	0750 115 303	(0735 321 094)	2	2./3.VİTES MASURA BİLYA	NEEDLE CAGE	92x100x63mm
17	K20.00301	1316 304 132	(1316 304 079)	1	KAMALI MİL	MAIN SHAFT	
18	K20.01506	1324 304 014	(1312 304 150)	1	KAMALI MİL YAĞ BORUSU	OIL PIPE	
19	K20.00213	1316 304 002		1	2.VİTES DİŞLİSİ 38 DİŞ	GEAR 2nd 38 T	
20	K20.00183	1316 304 156		2	1./2.VİTES SENKROMENÇ	ENGAGING RING	
21	K20.00113	1316 304 170	(1316 304 150)	2	1./2.VİTES SENK.FRENLEME	SYCNHRONIZING CONE	
22	K20.00180	1316 304 163	(1316 304 148)	1	1./2.VİTES YILDIZ DİŞLİ	GUIDE SLEEVE	
23	K20.00114	1316 304 169	(1315 304 136)	1	1./2.VİTES SENK.HALKA	ENGAGING SLEEVE	
24	K20.00389	1312 304 084		1	1.VİT.MASURA BİLYA ÇANAĞI	BEARING RACE	
25	K20.01328	0750 115 327		1	1.VİTES MSURA BİLYA	NEEDLE CAGE	96X104X72mm
26	K20.00420	1316 304 010		1	1.VİTES DİŞLİSİ 47 DİŞ	GEAR 1st. 47 T	
27	K20.00421	1312 304 124		1	GERİ VİTES YILDIZ DİŞLİ	HUB	
28	K20.00422	1316 304 133	(1312 304 082)	1	GERİ VİT.MASURA BİLYA ÇANAĞI	BEARING RACE	
29	K20.01330	0750 115 326		1	GERİ VİTES MASURA BİLYA	NEEDLE CAGE	90X98X50mm
30	K20.00423	1316 304 012		1	GERİ VİTES DİŞLİSİ 44 DİŞ	REVERSE GEAR 44 T	
31	K20.01121	0750 117 678		1	KAMALI MİL ARKA BİLYA	ROLLER BEARING	80X140X36,5mm
32	K20.02146	0630 501 316		1	KAMALI MİL ARKA BİLYA SEGMANI	RETAINING RING	3.50mm

Original parts names, oem numbers, symbols and descriptions used in this catalogue are for reference purposes only.

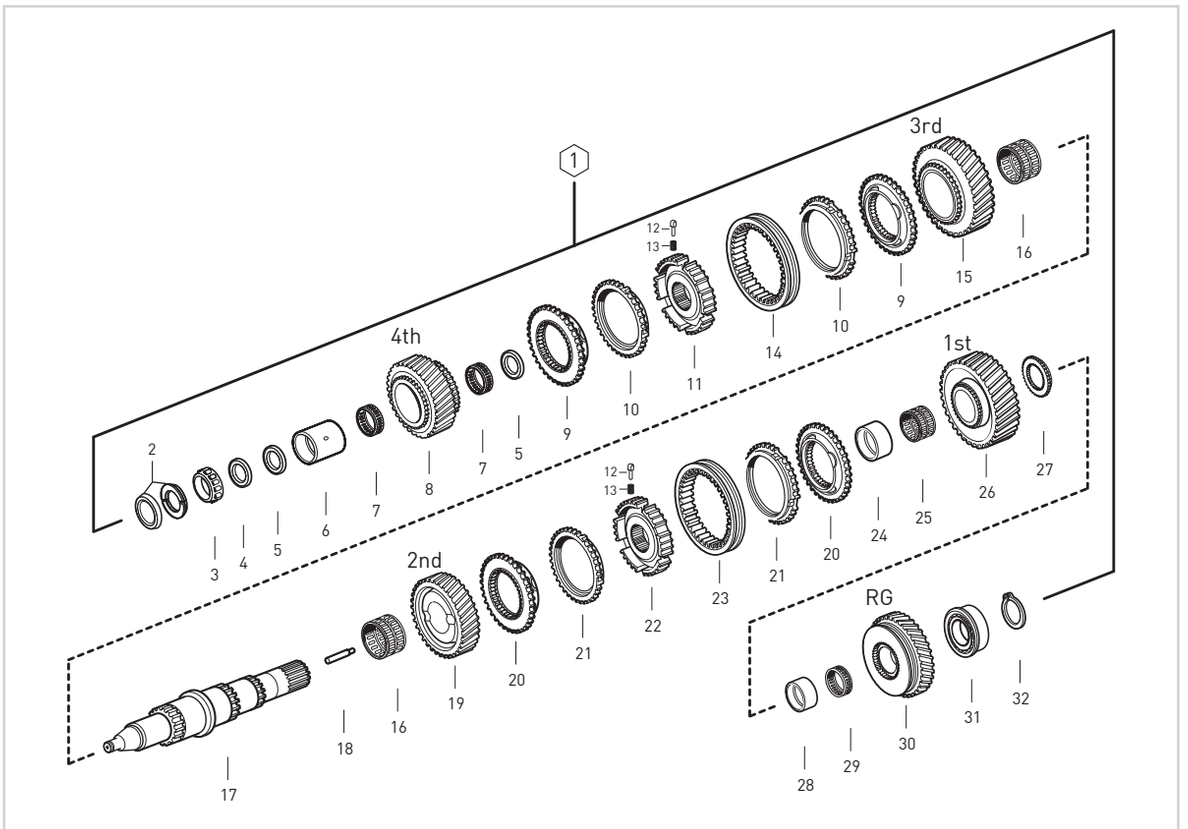

Fig.	Kacmaz No.	Oem No	Oem Old No	Pcs.	Ürün Tanımı	Description	Sizes
1	K20.00929	1356 104 016		kit	KAMALI MİL KOMPLE	MAIN SHAFT COMPLETE	
2	K20.01565	1499 298 025		1	EMN.SACI ve KİLİT TAK.	SPLIT RING KIT	4.80mm
3	K20.01109	0750 117 232	(0735 371 563)	1	KAMALI MİL UÇ BİLYA	ROLLER BEARING	
4	K20.01527	1315 304 048		1	KAMALI MİL UÇ BİLYA PULU	THRUST WASHER	8.00mm
5	K20.01533	0750 101 158		2	4.VİT.ÇANAK ALIN PULU	THRUST WASHER	
6	K20.00388	0750 119 124		1	4.VİT.MASURA BİLYA ÇANAĞI	BEARING RACE	
7	K20.01303	0750 115 531	(0750 115 534)	2	4.VİT.DİŞLİ MASURA BİLYA	NEEDLE CAGE	77X101X29mm
8	K20.00208	1316 304 103		1	4.VİTES DİŞLİSİ 32 DİŞ	GEAR 4th. 32 T	
9	K20.00881	1316 304 190		2	3./4.VİTES SENKROMENÇ	ENGAGING RING	
10	K20.00880	1316 304 189		2	3./ 4.VİT.SENK.FRENLEME	SYNCHRONIZING CONE	
11	K20.00898	1356 304 019		1	3./4.VİTES YILDIZ DİŞLİ	GUIDE SLEEVE	
12	K20.00111	1297 304 436		6	YILDIZ DİŞLİ FİŞEĞİ	PRESSURE PIECE	
13	K20.00110	0732 040 409		6	YILDIZ DİŞLİ YAYI	SPRING	
14	K20.00871	1356 304 023	(1316 304 188)	1	3./4.VİT.SENK.HALKA	ENGAGING SLEEVE	
15	K20.00211	1316 304 008		1	3.VİTES DİŞLİSİ 34 DİŞ	GEAR 3rd. 34 T	
16	K20.01326	0750 115 303	(0735 321 094)	2	2./3.VİTES MASURA BİLYA	NEEDLE CAGE	92x100x63mm
17	K20.00301	1316 304 132	(1316 304 079)	1	KAMALI MİL	MAIN SHAFT	
18	K20.01506	1324 304 014	(1312 304 150)	1	KAMALI MİL YAĞ BORUSU	OIL PIPE	
19	K20.00213	1316 304 002		1	2.VİTES DİŞLİSİ 38 DİŞ	GEAR 2nd 38 T	
20	K20.00183	1316 304 156		2	1./2.VİTES SENKROMENÇ	ENGAGING RING	
21	K20.00113	1316 304 170	(1316 304 150)	2	1./2.VİTES SENK.FRENLEME	SYCNHRONIZING CONE	
22	K20.00889	1356 304 022		1	1./2.VİTES YILDIZ DİŞLİ	GUIDE SLEEVE	
23	K20.00803	1356 304 024		1	1./2.VİTES SENK.HALKA	ENGAGING SLEEVE	
24	K20.00389	1312 304 084		1	1.VİT.MASURA BİLYA ÇANAĞI	BEARING RACE	
25	K20.01328	0750 115 327		1	1.VİTES MSURA BİLYA	NEEDLE CAGE	96X104X72mm
26	K20.00420	1316 304 010		1	1.VİTES DİŞLİSİ 47 DİŞ	GEAR 1st. 47 T	
27	K20.00421	1312 304 124		1	GERİ VİTES YILDIZ DİŞLİ	HUB	
28	K20.00422	1316 304 133	(1312 304 082)	1	GERİ VİT.MASURA BİLYA ÇANAĞI	BEARING RACE	
29	K20.01330	0750 115 326		1	GERİ VİTES MASURA BİLYA	NEEDLE CAGE	90X98X50mm
30	K20.00423	1316 304 012		1	GERİ VİTES DİŞLİSİ 44 DİŞ	REVERSE GEAR 44 T	
31	K20.01121	0750 117 678		1	KAMALI MİL ARKA BİLYA	ROLLER BEARING	80X140X36,5mm
32	K20.02146	0630 501 316		1	KAMALI MİL ARKA BİLYA SEGMANI	RETAINING RING	3.50mm

Original parts names, oem numbers, symbols and descriptions used in this catalogue are for reference purposes only.

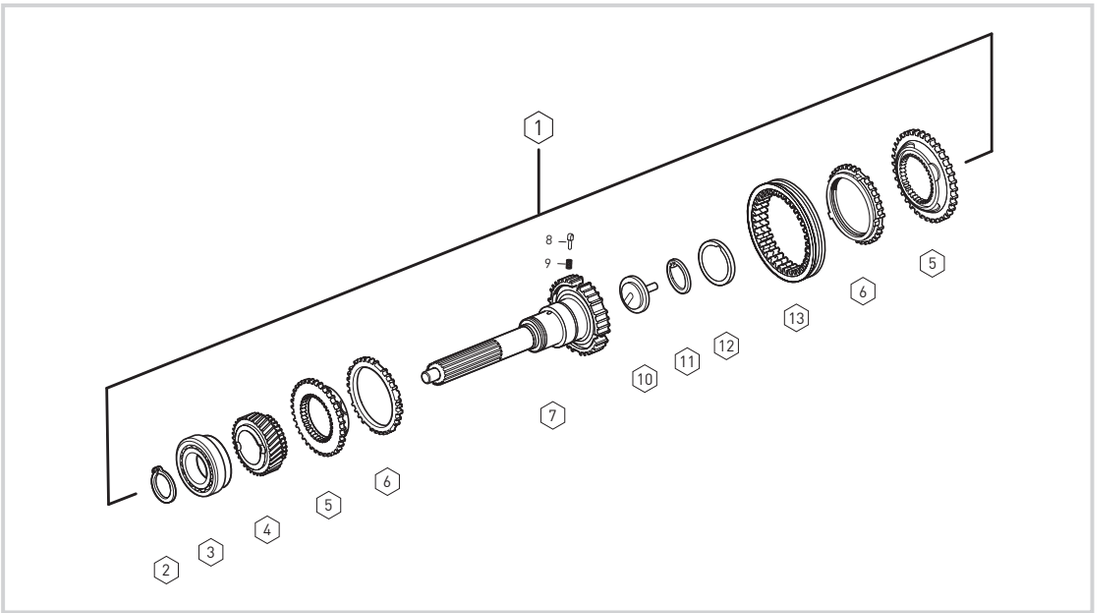

DG-TD

Fig.	Kacmaz No.	Oem No	Oem Old No	Pcs.	Ürün Tanımı	Description	Sizes
1	K20.00854	1316 102 034		kit	PRİZDİREK KOMPLE	INPUT SHAFT COMPLETE	
2	K20.01897	0730 501 598		1	PRİZDİREK ÖN BİLYA SEGMANI	RETAINING RING	4.00 mm
3	K20.01104	0750 117 732		1	PRİZDİREK ÖN BİLYA	ROLLER BEARING	
4	K20.00196	1316 302 066		1	TAKVİYE DİŞLİSİ 30 DİŞ	CONSTANT GEAR 30 T	
5	K20.00101	1312 304 027		2	TAKVİYE KİLİT SENKROMENÇ	ENGAGING RING	
6	K20.00108	1297 304 484	(1297 304 402)	2	TAKVİYE FRENLEME	SYNCHRONIZING CONE	
7	K20.00187	1316 202 025	(1316 302 085)	1	PRİZDİREK	INPUT SHAFT	
8	K20.00111	1297 304 436		3	PRİZDİREK FİŞEĞİ	PRESSURE PIECE	
9	K20.00110	0732 040 409		3	PRİZDİREK FİŞEK YAYI	SPRING	
10	K20.01504	1315 302 196		1	PRİZDİREK YAĞ PİPETİ	OIL PIPET	
11	K20.01505	0630 502 027		1	PRİZDİREK SEGMANI	RETAINING RING	
12	K20.01011	0501 314 060	(0750 101 179)	1	PRİZDİREK ARKA KEÇE	OIL SEAL	
13	K20.00098	1310 304 202	(1310 304 174)	1	TAKVİYE SENK.HALKA	ENGAGING SLEEVE	
			(1312 304 057)				

SG-TO

Fig.	Kacmaz No.	Oem No	Oem Old No	Pcs.	Ürün Tanımı	Description	Sizes
1	K20.00855	1316 102 033		kit	PRİZDİREK KOMPLE	INPUT SHAFT COMPLETE	
2	K20.01897	0730 501 598		1	PRİZDİREK ÖN BİLYA SEGMANI	RETAINING RING	4.00 mm
3	K20.01104	0750 117 732		1	PRİZDİREK ÖN BİLYA	ROLLER BEARING	
4	K20.00195	1316 302 067		1	TAKVİYE DİŞLİSİ 35 DİŞ	CONSTANT GEAR 30 T	
5	K20.00101	1312 304 027		2	TAKVİYE KİLİT SENKROMENÇ	ENGAGING RING	
6	K20.00108	1297 304 484	(1297 304 402)	2	TAKVİYE FRENLEME	SYNCHRONIZING CONE	
7	K20.00187	1316 202 025	(1316 302 085)	1	PRİZDİREK	INPUT SHAFT	
8	K20.00111	1297 304 436		3	PRİZDİREK FİŞEĞİ	PRESSURE PIECE	
9	K20.00110	0732 040 409		3	PRİZDİREK FİŞEK YAYI	SPRING	
10	K20.01504	1315 302 196		1	PRİZDİREK YAĞ PİPETİ	OIL PIPET	
11	K20.01505	0630 502 027		1	PRİZDİREK SEGMANI	RETAINING RING	
12	K20.01011	0501 314 060	(0750 101 179)	1	PRİZDİREK ARKA KEÇE	OIL SEAL	
13	K20.00098	1310 304 202	(1310 304 174)	1	TAKVİYE SENK.HALKA	ENGAGING SLEEVE	
			(1312 304 057)				

Original parts names, oem numbers, symbols and descriptions used in this catalogue are for reference purposes only.

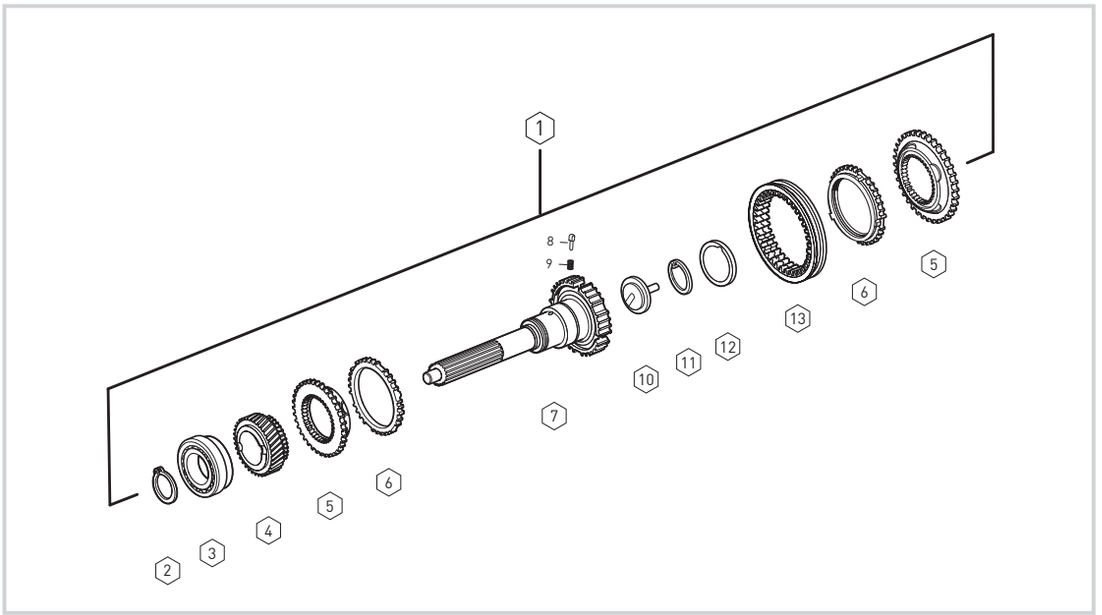

DG-TD

Fig.	Kacmaz No.	Oem No	Oem Old No	Pcs.	Ürün Tanımı	Description	Sizes
1	K20.00856	1316 102 036		kit	PRİZDİREK KOMPLE	INPUT SHAFT COMPLETE	
2	K20.01897	0730 501 598		1	PRİZDİREK ÖN BİLYA SEGMANI	RETAINING RING	4.00 mm
3	K20.01104	0750 117 732		1	PRİZDİREK ÖN BİLYA	ROLLER BEARING	
4	K20.00196	1316 302 066		1	TAKVİYE DİŞLİSİ 30 DİŞ	CONSTANT GEAR 30 T	
5	K20.00101	1312 304 027		2	TAKVİYE KİLİT SENKROMENÇ	ENGAGING RING	
6	K20.00108	1297 304 484	(1297 304 402)	2	TAKVİYE FRENLEME	SYNCHRONIZING CONE	
7	K20.00188	1316 202 026	(1316 302 079)	1	PRİZDİREK	INPUT SHAFT	
8	K20.00111	1297 304 436		3	PRİZDİREK FİŞEĞİ	PRESSURE PIECE	
9	K20.00110	0732 040 409		3	PRİZDİREK FİŞEK YAYI	SPRING	
10	K20.01504	1315 302 196		1	PRİZDİREK YAĞ PİPETİ	OIL PIPET	
11	K20.01505	0630 502 027		1	PRİZDİREK SEGMANI	RETAINING RING	
12	K20.01011	0501 314 060	(0750 101 179)	1	PRİZDİREK ARKA KEÇE	OIL SEAL	
13	K20.00098	1310 304 202	(1310 304 174)	1	TAKVİYE SENK.HALKA	ENGAGING SLEEVE	
			(1312 304 057)				

SG-TO

Fig.	Kacmaz No.	Oem No	Oem Old No	Pcs.	Ürün Tanımı	Description	Sizes
1	K20.00857	1316 102 059		kit	PRİZDİREK KOMPLE	INPUT SHAFT COMPLETE	
2	K20.01897	0730 501 598		1	PRİZDİREK ÖN BİLYA SEGMANI	RETAINING RING	4.00 mm
3	K20.01104	0750 117 732		1	PRİZDİREK ÖN BİLYA	ROLLER BEARING	
4	K20.00195	1316 302 067		1	TAKVİYE DİŞLİSİ 35 DİŞ	CONSTANT GEAR 30 T	
5	K20.00101	1312 304 027		2	TAKVİYE KİLİT SENKROMENÇ	ENGAGING RING	
6	K20.00108	1297 304 484	(1297 304 402)	2	TAKVİYE FRENLEME	SYNCHRONIZING CONE	
7	K20.00188	1316 202 026	(1316 302 079)	1	PRİZDİREK	INPUT SHAFT	
8	K20.00111	1297 304 436		3	PRİZDİREK FİŞEĞİ	PRESSURE PIECE	
9	K20.00110	0732 040 409		3	PRİZDİREK FİŞEK YAYI	SPRING	
10	K20.01504	1315 302 196		1	PRİZDİREK YAĞ PİPETİ	OIL PIPET	
11	K20.01505	0630 502 027		1	PRİZDİREK SEGMANI	RETAINING RING	
12	K20.01011	0501 314 060	(0750 101 179)	1	PRİZDİREK ARKA KEÇE	OIL SEAL	
13	K20.00098	1310 304 202	(1310 304 174)	1	TAKVİYE SENK.HALKA	ENGAGING SLEEVE	
			(1312 304 057)				

Original parts names, oem numbers, symbols and descriptions used in this catalogue are for reference purposes only.

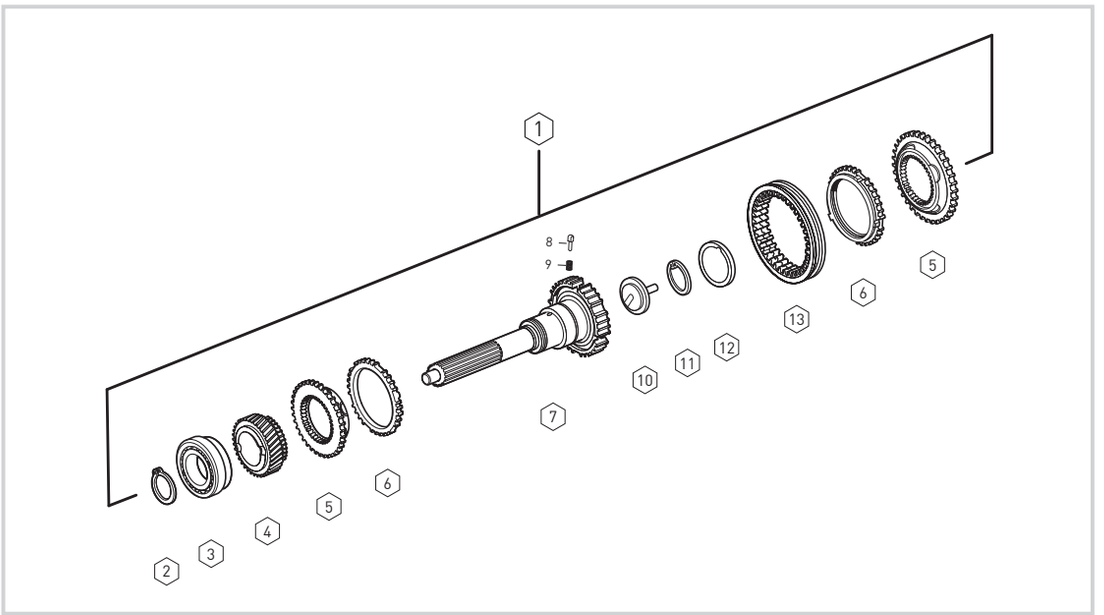

DG-TD

Fig.	Kacmaz No.	Oem No	Oem Old No	Pcs.	Ürün Tanımı	Description	Sizes
1	K20.00859	1316 102 055		kit	PRİZDİREK KOMPLE	INPUT SHAFT COMPLETE	
2	K20.01897	0730 501 598		1	PRİZDİREK ÖN BİLYA SEGMANI	RETAINING RING	4.00 mm
3	K20.01104	0750 117 732		1	PRİZDİREK ÖN BİLYA	ROLLER BEARING	
4	K20.00196	1316 302 066		1	TAKVİYE DİŞLİSİ 30 DİŞ	CONSTANT GEAR 30 T	
5	K20.00101	1312 304 027		2	TAKVİYE KİLİT SENKROMENÇ	ENGAGING RING	
6	K20.00108	1297 304 484	(1297 304 402)	2	TAKVİYE FRENLEME	SYNCHRONIZING CONE	
7	K20.00190	1316 202 038	(1316 302 091)	1	PRİZDİREK	INPUT SHAFT	
8	K20.00111	1297 304 436		3	PRİZDİREK FİŞEĞİ	PRESSURE PIECE	
9	K20.00110	0732 040 409		3	PRİZDİREK FİŞEK YAYI	SPRING	
10	K20.01504	1315 302 196		1	PRİZDİREK YAĞ PİPETİ	OIL PIPET	
11	K20.01505	0630 502 027		1	PRİZDİREK SEGMANI	RETAINING RING	
12	K20.01011	0501 314 060	(0750 101 179)	1	PRİZDİREK ARKA KEÇE	OIL SEAL	
13	K20.00098	1310 304 202	(1310 304 174)	1	TAKVİYE SENK.HALKA	ENGAGING SLEEVE	
			(1312 304 057)				

SG-TO

Fig.	Kacmaz No.	Oem No	Oem Old No	Pcs.	Ürün Tanımı	Description	Sizes
1	K20.00858	1316 102 061		kit	PRİZDİREK KOMPLE	INPUT SHAFT COMPLETE	
2	K20.01897	0730 501 598		1	PRİZDİREK ÖN BİLYA SEGMANI	RETAINING RING	4.00 mm
3	K20.01104	0750 117 732		1	PRİZDİREK ÖN BİLYA	ROLLER BEARING	
4	K20.00195	1316 302 067		1	TAKVİYE DİŞLİSİ 35 DİŞ	CONSTANT GEAR 30 T	
5	K20.00101	1312 304 027		2	TAKVİYE KİLİT SENKROMENÇ	ENGAGING RING	
6	K20.00108	1297 304 484	(1297 304 402)	2	TAKVİYE FRENLEME	SYNCHRONIZING CONE	
7	K20.00190	1316 202 038	(1316 302 091)	1	PRİZDİREK	INPUT SHAFT	
8	K20.00111	1297 304 436		3	PRİZDİREK FİŞEĞİ	PRESSURE PIECE	
9	K20.00110	0732 040 409		3	PRİZDİREK FİŞEK YAYI	SPRING	
10	K20.01504	1315 302 196		1	PRİZDİREK YAĞ PİPETİ	OIL PIPET	
11	K20.01505	0630 502 027		1	PRİZDİREK SEGMANI	RETAINING RING	
12	K20.01011	0501 314 060	(0750 101 179)	1	PRİZDİREK ARKA KEÇE	OIL SEAL	
13	K20.00098	1310 304 202	(1310 304 174)	1	TAKVİYE SENK.HALKA	ENGAGING SLEEVE	
			(1312 304 057)				

Original parts names, oem numbers, symbols and descriptions used in this catalogue are for reference purposes only.

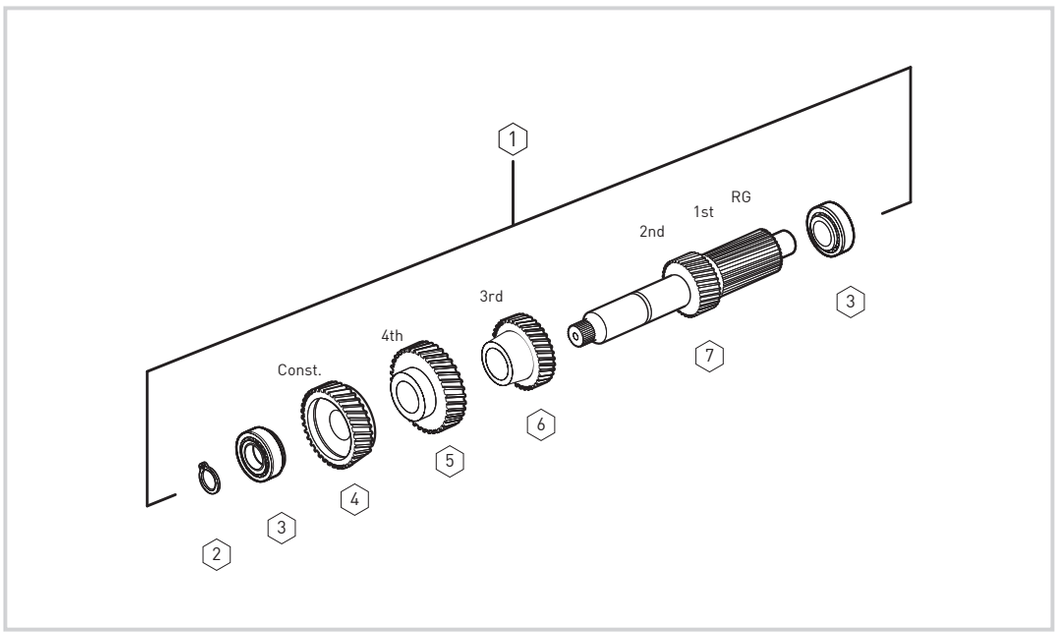

DG-TD

Fig.	Kacmaz No.	Oem No	Oem Old No	Pcs.	Ürün Tanımı	Description	Sizes
1	K20.00862	1316 103 012	(1356 103 003)	kit	GRUP MİLİ KOMPLE	COUNTER SHAFT COMPLETE	
2	K20.02200	0630 531 064		1	GRUP MİLİ ÖN BİLYA SEGMANI	RETAINING RING	50X2.50mm
3	K20.01126	0750 117 009	(0735 372 156)	2	GRUP MİLİ ÖN VE ARKA BİLYA	ROLLER BEARING	49.2X103.1X43.6mm
4	K20.00200	1316 303 030		1	TAKVİYE DİŞLİ KARŞILIĞI 39 DİŞ	CONSTANT GEAR 39 T	
5	K20.00203	1316 303 065		1	4.VİT.DİŞLİ KARŞILIĞI 35 DİŞ	GEAR 4th 35 T	
6	K20.00206	1316 303 005		1	3.VİT.DİŞLİ KARŞILIĞI 26 DİŞ	GEAR 3rd 26 T	
7	K20.00424	1316 303 033		1	GRUP MİLİ 17/20 DİŞ	COUNTER SHAFT 17/20 T	

SG-TO

Fig.	Kacmaz No.	Oem No	Oem Old No	Pcs.	Ürün Tanımı	Description	Sizes
1	K20.00861	1316 103 013	(1356 103 002)	kit	GRUP MİLİ KOMPLE	COUNTER SHAFT COMPLETE	
2	K20.02200	0630 531 064		1	GRUP MİLİ ÖN BİLYA SEGMANI	RETAINING RING	50X2.50mm
3	K20.01126	0750 117 009	(0735 372 156)	2	GRUP MİLİ ÖN VE ARKA BİLYA	ROLLER BEARING	49,2X103,1X43,6mm
4	K20.00199	1316 303 071	(1316 303 064)	1	TAKVİYE DİŞLİ KARŞILIĞI 32 DİŞ	CONSTANT GEAR 32 T	
5	K20.00203	1316 303 065		1	4.VİT.DİŞLİ KARŞILIĞI 35 DİŞ	GEAR 4th 35 T	
6	K20.00206	1316 303 005		1	3.VİT.DİŞLİ KARŞILIĞI 26 DİŞ	GEAR 3rd 26 T	
7	K20.00424	1316 303 033		1	GRUP MİLİ 17/20 DİŞ	COUNTER SHAFT 17/20 T	

Original parts names, oem numbers, symbols and descriptions used in this catalogue are for reference purposes only.

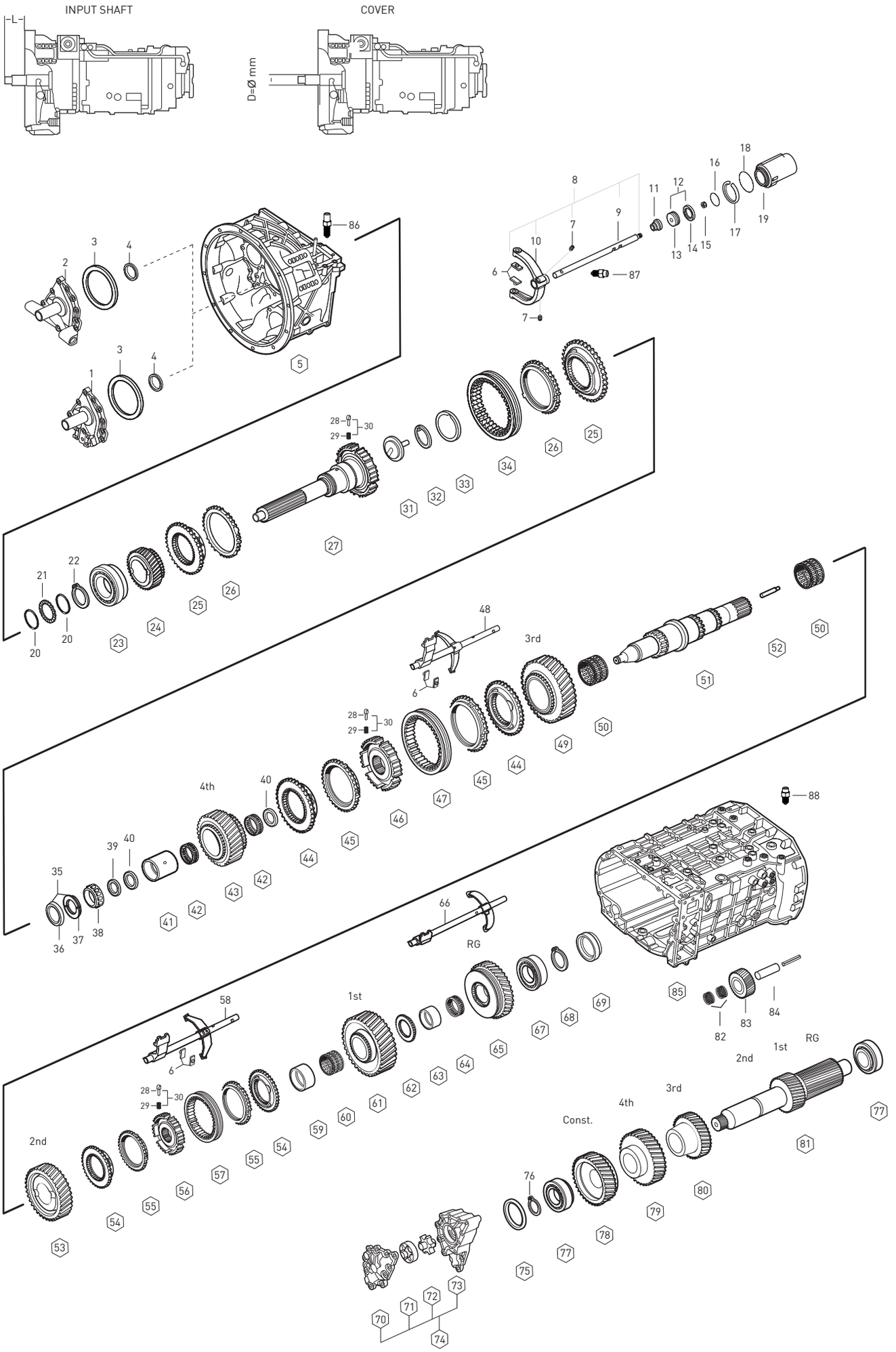

Original parts names, oem numbers, symbols and descriptions used in this catalogue are for reference purposes only.

Fig.	Kacmaz No.	Oem No	Oem Old No	Pcs.	Ürün Tanımı	Description	Sizes	Notes	[X1]-SG-TO 1380-084
1	K20.00560	1315 302 136	(1315 402 136)	1	PRİZDİREK KEÇE KAPAĞI	COVER	L=7 D=60	(M)(R)(B)	◆
1	K20.00559	1315 302 075	(1315 402 075)	1	PRİZDİREK KEÇE KAPAĞI	COVER	L=7 D=60	(D)	◆
2	K20.00663	1315 302 134	(1315 302 122)	1	PRİZDİREK KEÇE KAPAĞI	COVER	L=7 D=60	(M)	◆
2	K20.00634	1315 302 106	(1315 402 106)	1	PRİZDİREK KEÇE KAPAĞI	COVER	L=7 D=66	(R)	◆
2	K20.00653	1315 302 072	(1315 402 072)	1	PRİZDİREK KEÇE KAPAĞI	COVER	L=3 D=62.6	(I)	◆
2		1315 202 060	(4130 306 306)	1	PRİZDİREK KEÇE KAPAĞI	COVER		(WSK)	◆
3	K20.01683	0730 007 486		1	PRİZ.ÖN BİLYA RAYNELİ	SHIM	2.00mm		◆
3	K20.01684	0730 007 483		1	PRİZ.ÖN BİLYA RAYNELİ	SHIM	1.85mm		◆
3	K20.01685	0730 007 479		1	PRİZ.ÖN BİLYA RAYNELİ	SHIM	1.65mm		◆
3	K20.01686	0730 007 136		1	PRİZ.ÖN BİLYA RAYNELİ	SHIM	1.60mm		◆
3	K20.01687	0730 007 129		1	PRİZ.ÖN BİLYA RAYNELİ	SHIM	1.25mm		◆
3	K20.01668	0730 005 748		1	PRİZ.ÖN BİLYA RAYNELİ	SHIM	0.90mm		◆
3	K20.01671	2050 309 067		1	PRİZ.ÖN BİLYA RAYNELİ	SHIM	0.30mm		◆
3	K20.01582	0730 005 747		1	PRİZ.ÖN BİLYA RAYNELİ	SHIM	0.25mm		◆
3	K20.01672	2050 309 068		1	PRİZ.ÖN BİLYA RAYNELİ	SHIM	0.20mm		◆
3	K20.01673	2001673		1	PRİZ.ÖN BİLYA RAYNELİ	SHIM	0.10mm		◆
4	K20.01003	0734 310 387	(0734 310 386)	1	PRİZDİREK ÖN KEÇE	OIL SEAL	55x75x8mm		◆
4	K20.01008	0734 310 104		1	PRİZDİREK ÖN KEÇE	OIL SEAL	52x68x8mm	(WSK)	◆
5		1316 201 142	(1316 301 064)	1	ŞANZIMAN ÖN GÖVDE	HOUSING			◆
5		1316 201 149		1	ŞANZIMAN ÖN GÖVDE	HOUSING			◆
5		1316 221 015		1	ŞANZIMAN ÖN GÖVDE	HOUSING		(NMW)	◆
6	K20.00325	1316 306 015		6	TAK.-1-2-3-4.VİT.HİL.PABUCU	SLIDING PAD			◆
7	K20.01688	1315 312 047		2	TAK.HİLAL VİDASI	SCREW	M12x1.00mm		◆
8	K20.00655	1316 212 010		1	TAKVİYE HİLALİ KOMPLE	G.S.FORK and RAIL ASSY.			◆
9	K20.00654	1316 312 023		1	TAKVİYE HİLAL MİLİ	G SHIFT RAIL			◆
10	K20.00635	1315 312 074		1	TAKVİYE HİLALİ	G SHIFT FORK			◆
11	K20.01026	0750 112 253	(0750 112 131)	1	TAKVİYE HİLAL MİL KEÇESİ	FLANGE PACKING	25x40x14.50mm		◆
12	K20.01779	0501 324 670		1	TAKVİYE PİSTON SİLİNDİRİ	PISTON			◆
13	K20.01772	1315 312 020		1	TAKVİYE HİLAL MİL PİSTON	PISTON			◆
14	K20.01020	0750 112 177		1	TAKVİYE HAVA KEÇESİ	DOUBLE PACKING	55x63x9.40mm		◆
15	K20.01774	0737 006 095		1	TAK.HİLAL MİL SOMUNU	NUT	M16x1.50mm		◆
16		0634 313 320		1	TAKVİYE SİLİNDİR ORİNGİ	O-RING			◆
17	K20.01689	1315 312 034		1	TAKVİYE SİLİNDİR SEGMANI	RETAINING RING			◆
18		0634 313 018		1	TAKVİYE SİLİNDİR ORİNGİ	O-RING			◆
19	K20.00877	1315 312 048		1	TAKVİYE SİLİNDİR GÖVDESİ	CYLINDER			◆
20	K20.01530	0730 150 766		2	P.DİREK YAĞLAMA PULU	THRUST WASHER			◆
21		1315 302 040		1	P.DİREK YAĞLAMA SACI	SPACER RING			◆
22	K20.01897	0730 501 598		1	P.DİREK B.BİLYA SEGMANI	RETAINING RING			◆
23	K20.01104	0750 117 732		1	PRİZDİREK ÖN BİLYA	ROLLER BEARING	80x150x30.50mm		◆
24	K20.00195	1316 302 067	(1316 302 026)	1	TAKVİYE DİŞLİSİ 35 DİŞ	CONSTANT GEAR 35 T			◆
25	K20.00101	1312 304 027		2	TAKVİYE SENKROMENÇ	ENGAGING RING			◆

NOTES :

NOTLAR :

Original parts names, oem numbers, symbols and descriptions used in this catalogue are for reference purposes only.

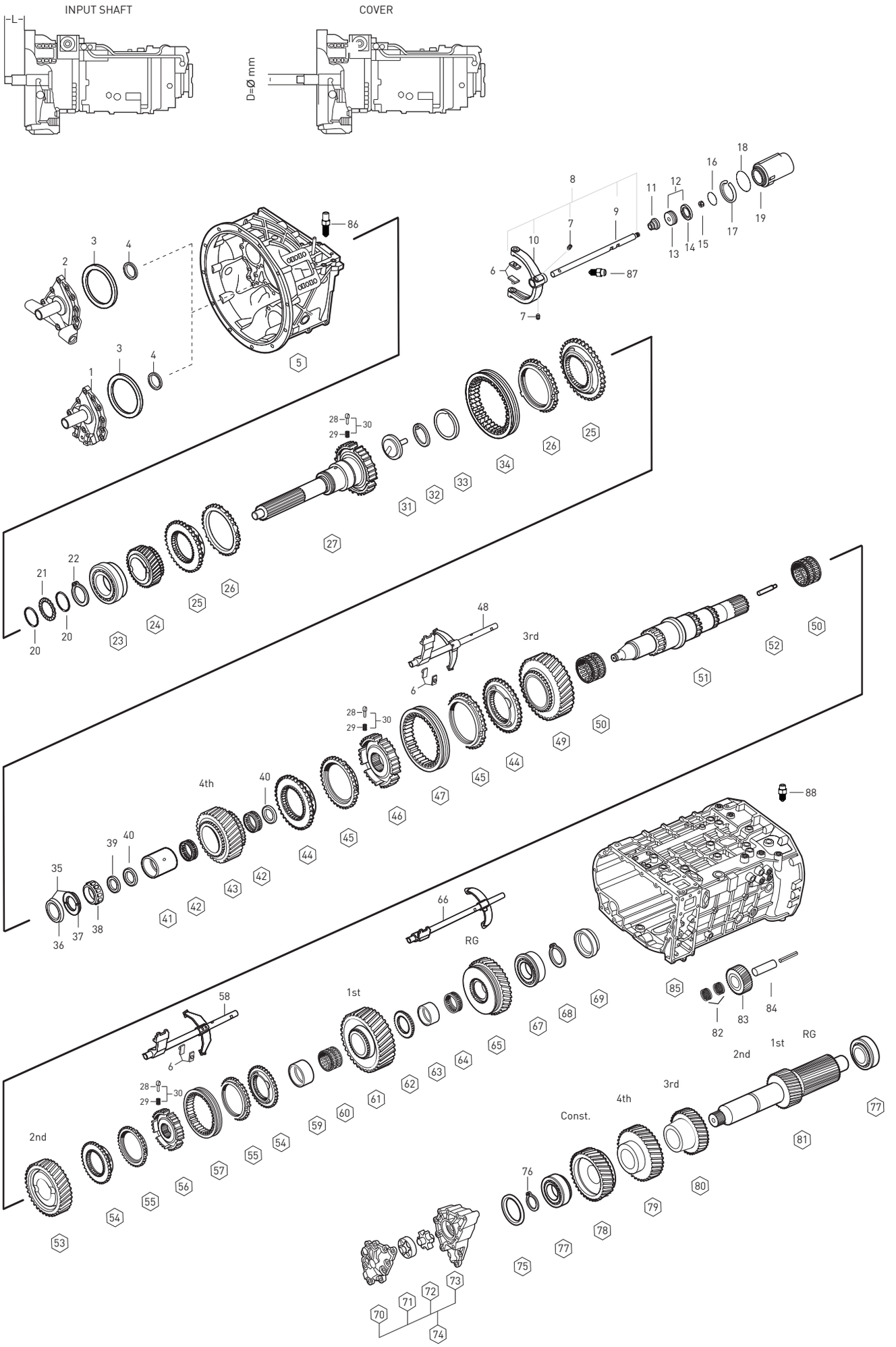

Original parts names, oem numbers, symbols and descriptions used in this catalogue are for reference purposes only.

Fig.	Kacmaz No.	Oem No	Oem Old No	Pcs.	Ürün Tanımı	Description	Sizes	Notes	(X1)-SG-TO 1380-084
26	K20.00108	1297 304 484	(1297 304 402)	2	TAKVİYE SENK.FRENLEME	SYNCHRONIZING CONE			◆
27	K20.00187	1316 202 025	(1316 302 085)	1	PRİZDİREK	INPUT SHAFT	L=109 SAE 2	(M)(R)(B)	◆
27	K20.00188	1316 202 026	(1316 302 079)	1	PRİZDİREK	INPUT SHAFT	L=117 SAE 2	(I)	◆
27	K20.00190	1316 202 038	(1316 302 091)	1	PRİZDİREK	INPUT SHAFT	L=109 SAE 2	(RVI)	◆
27	K20.00191	1316 221 017		1	PRİZDİREK	INPUT SHAFT		(NMV)	◆
27	K20.00189	1316 202 033		1	PRİZDİREK	INPUT SHAFT		(WSK)	◆
27	K20.00901	1316 202 037	(1316 302 087)	1	PRİZDİREK	INPUT SHAFT			◆
28	K20.00111	1297 304 436		9	PRİZ.veYILDIZ DİŞLİ FİŞEĞİ	PRESSURE PIECE			◆
29	K20.00110	0732 040 409		9	PRİZ.ve YILDIZ DİŞLİ YAYI	SPRING			◆
30	K20.01745	1295 298 956		kit	YAY FİŞEK TAKIMI	REPAIR KIT			◆
31	K20.01504	1315 302 196		1	PRİZDİREK YAĞ PİPETİ	OIL PIPET			◆
32	K20.01505	0630 502 027		1	PRİZDİREK YAĞ PİPETİ SEGM.	RETAINING RING	50x2mm		◆
33	K20.01011	0501 314 060	(0750 101 179)	1	PRİZDİREK ARKA KEÇE	OIL SEAL			◆
34	K20.00098	1310 304 202	(1310 304 174)	1	TAKVİYE VİTES SENK.HALKA	ENGAGING SLEEVE			◆
			(1312 302 057)						
			(1297 304 448)						
35	K20.01561	1499 298 027		1	EMN.SACI VE P.KİLİT TAK.	SPLIT RING KIT	5.00mm		◆
35	K20.01563	1499 298 026		1	EMN.SACI VE P.KİLİT TAK.	SPLIT RING KIT	4.90mm		◆
35	K20.01580	2001580		1	EMN.SACI VE P.KİLİT TAK.	SPLIT RING KIT	4.85mm		◆
35	K20.01565	1499 298 025		1	EMN.SACI VE P.KİLİT TAK.	SPLIT RING KIT	4.80mm		◆
35	K20.01567	1499 298 024		1	EMN.SACI VE P.KİLİT TAK.	SPLIT RING KIT	4.70mm		◆
35	K20.01569	1499 298 023		1	EMN.SACI VE P.KİLİT TAK.	SPLIT RING KIT	4.60mm		◆
36	K20.01571	0730 062 781		1	P. KİLİT EMNİYET SACI	RETAINING RING			◆
37	K20.01562	0730 107 023		2	PARÇALI KİLİT	SPLIT RING	5.00mm		◆
37	K20.01564	0730 107 022		2	PARÇALI KİLİT	SPLIT RING	4.90mm		◆
37	K20.01581	2001581		2	PARÇALI KİLİT	SPLIT RING	4.85mm		◆
37	K20.01566	0730 107 021		2	PARÇALI KİLİT	SPLIT RING	4.80mm		◆
37	K20.01568	0730 107 020		2	PARÇALI KİLİT	SPLIT RING	4.70mm		◆
37	K20.01570	0730 107 019		2	PARÇALI KİLİT	SPLIT RING	4.60mm		◆
38	K20.01109	0750 117 232	(0735 371 563)	1	KAMALI MİL UÇ BİLYA	ROLLER BEARING	42x40.3mm		◆
39	K20.01781	1315 304 051		1	KAMALI MİL UÇ BİLYA PULU	THRUST WASHER	8.30mm		◆
39	K20.01527	1315 304 048		1	KAMALI MİL UÇ BİLYA PULU	THRUST WASHER	8.00mm		◆
39	K20.01528	1315 304 047		1	KAMALI MİL UÇ BİLYA PULU	THRUST WASHER	7.90mm		◆
39	K20.01529	1315 304 046		1	KAMALI MİL UÇ BİLYA PULU	THRUST WASHER	7.80mm		◆
39	K20.01762	1315 304 045		1	KAMALI MİL UÇ BİLYA PULU	THRUST WASHER	7.70mm		◆
39	K20.01763	1315 304 044		1	KAMALI MİL UÇ BİLYA PULU	THRUST WASHER	7.60mm		◆
39	K20.01764	1315 304 043		1	KAMALI MİL UÇ BİLYA PULU	THRUST WASHER	7.50mm		◆
39	K20.01765	1315 304 085		1	KAMALI MİL UÇ BİLYA PULU	THRUST WASHER	7.40mm		◆
39	K20.01766	1315 304 086		1	KAMALI MİL UÇ BİLYA PULU	THRUST WASHER	7.30mm		◆
40	K20.01533	0750 101 158		2	4.VİTES ÇANAK ALIN PULU	THRUST WASHER			◆
41	K20.00388	0750 119 124		1	4.VİT.MAS.BİLYA ÇANAĞI	BEARING RACE	67x77x66.10mm		◆

NOTES :

NOTLAR :

Original parts names, oem numbers, symbols and descriptions used in this catalogue are for reference purposes only.

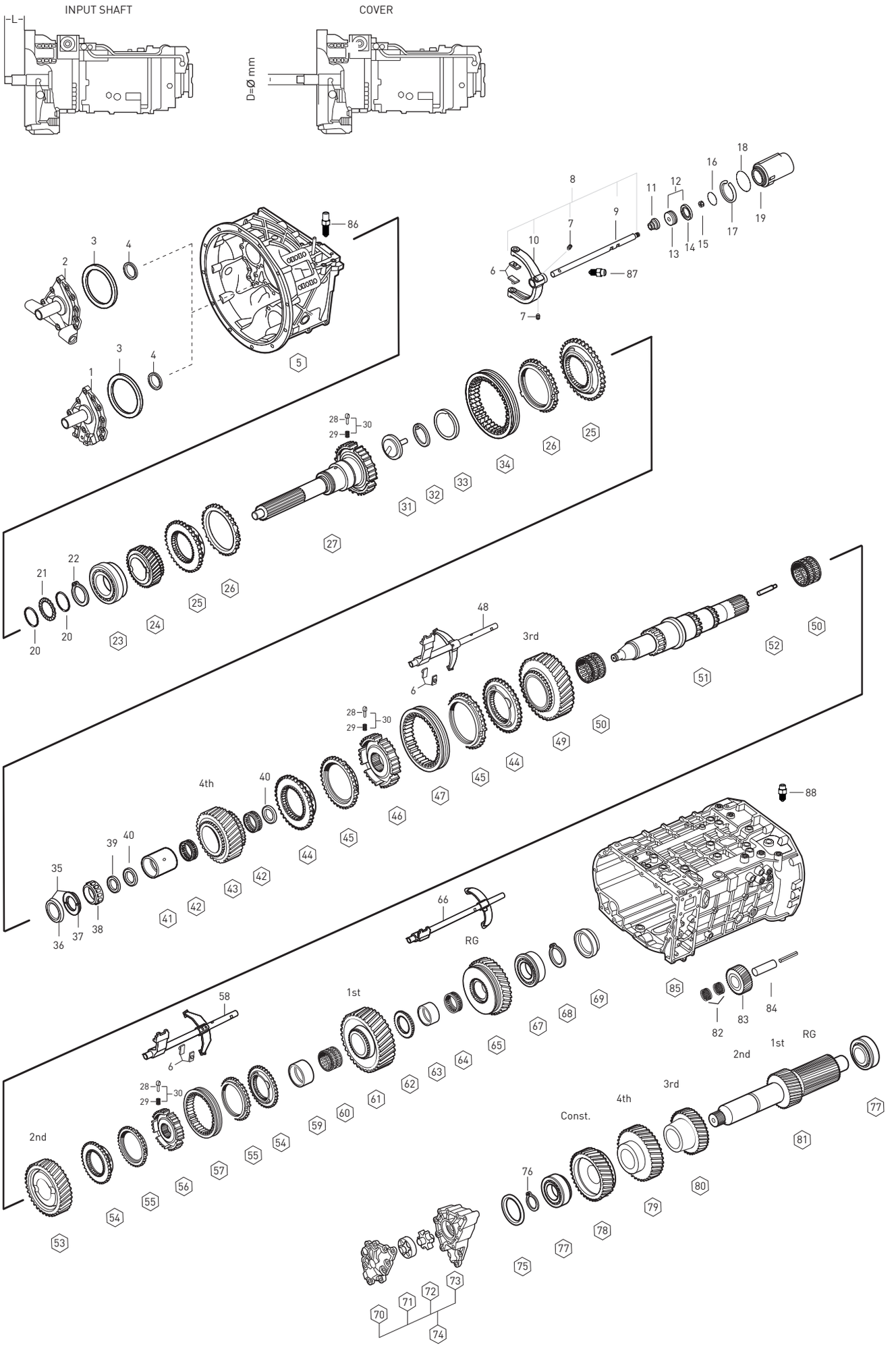

Original parts names, oem numbers, symbols and descriptions used in this catalogue are for reference purposes only.

Fig.	Kacmaz No.	Oem No	Oem Old No	Pcs.	Ürün Tanımı	Description	Sizes	Notes	(X1)-SG-TO 1380-084
42	K20.01303	0750 115 531	(0750 115 534)	2	4.VİT.DİŞLİ MASURA BİLYA	NEEDLE CAGE	77x101x29mm		◆
43	K20.00208	1316 304 103		1	4.VİTES DİŞLİSİ 32 DİŞ	GEAR 4th 32 T			◆
44	K20.00102	1316 304 159	(1316 304 145)	2	3./ 4.VİT.SENKROMENÇ	ENGAGING RING			◆
44	K20.00881	1316 304 190		2	3./ 4.VİT.SENKROMENÇ	ENGAGING RING	NEW		◆
45	K20.00109	1316 304 168	(1316 304 149)	2	3./ 4.VİT.SENK.FRENLEME	SYNCHRONIZING CONE			◆
45	K20.00880	1316 304 189		2	3./ 4.VİT.SENK.FRENLEME	SYNCHRONIZING CONE	NEW		◆
46	K20.00136	1316 304 162		1	3./ 4.VİT.YILDIZ DİŞLİ	GUIDE SLEEVE			◆
46	K20.00898	1356 304 019		1	3./ 4.VİT.YILDIZ DİŞLİ	GUIDE SLEEVE	NEW		◆
47	K20.00103	1316 304 167	(0769 186 281)	1	3./ 4.VİT.SENK.HALKA	ENGAGING SLEEVE			◆
			(1297 304 515)						
			(1315 304 135)						
47	K20.00871	1356 304 023	(1316 304 188)	1	3./ 4.VİT.SENK.HALKA	ENGAGING SLEEVE	NEW		◆
48		1316 206 058		1	3./4.VİTES HİLALİ	GEAR SHIT FORK 3rd/4th			◆
49	K20.00223	1316 304 066		1	3.VİTES DİŞLİSİ 32 DİŞ	GEAR 3rd 32 T			◆
50	K20.01326	0750 115 303	(0735 321 094)	2	2./3.VİTES MASURA BİLYA	NEEDLE CAGE	92x100x63mm		◆
51	K20.00456	1316 304 131	(1312 304 091)	1	KAMALI MİL	MAIN SHAFT			◆
52	K20.01507	1316 304 093	(1312 304 092)	1	KAMALI MİL YAĞ BORUSU	OIL PIPE			◆
53	K20.00213	1316 304 002		1	2.VİTES DİŞLİSİ 38 DİŞ	GEAR 2nd 38 T			◆
54	K20.00183	1316 304 156		2	1./ 2.VİTES SENKROMENÇ	ENGAGING RING			◆
54	K20.00910	1316 304 146		2	1./ 2.VİTES SENKROMENÇ	ENGAGING RING			◆
55	K20.00113	1316 304 170	(1316 304 150)	2	1./ 2.VİT.SENK.FRENLEME	SYNCHRONIZING CONE			◆
56	K20.00180	1316 304 163	(1316 304 148)	1	1./ 2.VİT.YILDIZ DİŞLİ	GUIDE SLEEV E			◆
56	K20.00889	1356 304 022		1	1./ 2.VİT.YILDIZ DİŞLİ	GUIDE SLEEVE	NEW		◆
57	K20.00114	1316 304 169	(1315 304 136)	1	1./ 2.VİT.SENK.HALKA	ENGAGING SLEEVE			◆
57	K20.00803	1356 304 024		1	1./ 2.VİT.SENK.HALKA	ENGAGING SLEEVE	NEW		◆
58		1316 206 055		1	1./2.VİTES HİLALİ	GEAR SHIT FORK 1st/2nd			◆
59	K20.00389	1312 304 084		1	1.VİTES MAS.BİLYA ÇANAĞI	BEARING RACE			◆
60	K20.01328	0750 115 327		1	1.VİTES MASURA BİLYA	NEEDLE CAGE	96x104x72mm		◆
61	K20.00420	1316 304 010		1	1.VİTES DİŞLİSİ 47 DİŞ	GEAR 1st 47 T			◆
62	K20.00393	1315 304 018		1	GERİ VİTES YILDIZ DİŞLİ	HUB			◆
63	K20.00422	1316 304 133	(1312 304 082)	1	GERİ VİT.MAS.BİLYA ÇANAĞI	BEARING RACE			◆
64	K20.01330	0750 115 326		1	GERİ VİTES MASURA BİLYA	NEEDLE CAGE	90x98x50mm		◆
65	K20.00423	1316 304 012	(1316 304 235)	1	GERİ VİTES DİŞLİSİ 44 DİŞ	REVERSE GEAR 44 T			◆
66		1316 206 061		1	GERİ VİTES HİLALİ	GEAR SHIFT FORK/RG			◆
67	K20.01121	0750 117 678		1	KAMALI MİL ARKA BİLYA	ROLLER BEARING	80x140x36.50mm		◆
68	K20.02151	0630 501 339		1	K.MİL ARKA BİLYA SEGMANI	RETAINING RING	80x3.65mm		◆
68		0630 501 338		1	K.MİL ARKA BİLYA SEGMANI	RETAINING RING	80x3.60mm		◆
68	K20.02146	0630 501 316		1	K.MİL ARKA BİLYA SEGMANI	RETAINING RING	80x3.50mm		◆
68	K20.02147	0630 501 315		1	K.MİL ARKA BİLYA SEGMANI	RETAINING RING	80x3.40mm		◆
68	K20.02141	0630 501 314		1	K.MİL ARKA BİLYA SEGMANI	RETAINING RING	80x3.30mm		◆
68	K20.02148	0630 501 313		1	K.MİL ARKA BİLYA SEGMANI	RETAINING RING	80x3.20mm		◆

NOTES :

NOTLAR :

Original parts names, oem numbers, symbols and descriptions used in this catalogue are for reference purposes only.

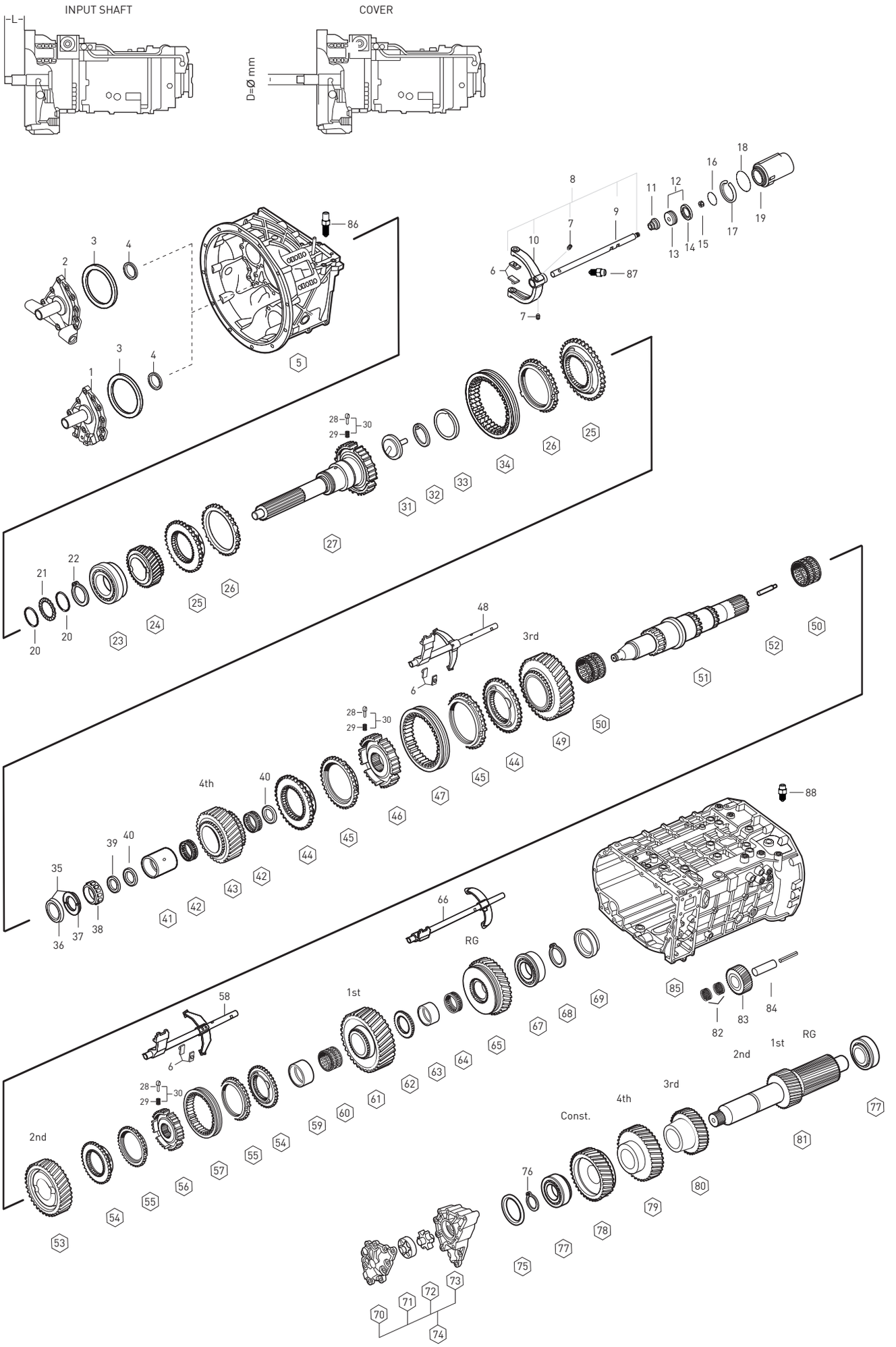

Original parts names, oem numbers, symbols and descriptions used in this catalogue are for reference purposes only.

Fig.	Kacmaz No.	Oem No	Oem Old No	Pcs.	Ürün Tanımı	Description	Sizes	Notes	K1)-SG-T01380-0.84
68		0630 501 333		1	K.MİL ARKA BİLYA SEGMANI	RETAINING RING	80x3.15mm		◆
68		0630 501 312		1	K.MİL ARKA BİLYA SEGMANI	RETAINING RING	80x3.10mm		◆
69	K20.01593	1315 332 073	(1316 332 108)	1	KAMALI MİL ARKA PUL	WASHER			◆
70	K20.00568	1315 302 120	(1315 302 116)	1	ŞANZ.YAĞ POMPA KAPAĞI	PUMP COVER			◆
			(1315 402 120)						
71	K20.00542	1314 202 039		1	YAĞ POMPA İÇ ROTOR	OIL PUMP GEAR			◆
72	K20.00543	1315 303 027		1	YAĞ POMPA DIŞ ROTOR	ROTOR			◆
73	K20.00569	1315 302 121	(1315 302 117)	1	ŞANZ.YAĞ POMPA GÖVDESİ	PUMP HOUSING			◆
			(1315 402 121)						
74	K20.00570	2000570		kit	ŞANZ.YAĞ POMPASI KOMPLE	OIL PUMP ASSY.			◆
75	K20.01674	0730 106 917		1	G.MİLİ ÖN BİLYA RAYNELİ	SHIM	3.00mm		◆
75		0730 106 916		1	G.MİLİ ÖN BİLYA RAYNELİ	SHIM	2.95mm		◆
75	K20.01751	0730 106 915		1	G.MİLİ ÖN BİLYA RAYNELİ	SHIM	2.90mm		◆
75	K20.01750	0730 106 913		1	G.MİLİ ÖN BİLYA RAYNELİ	SHIM	2.80mm		◆
75	K20.01749	0730 106 911		1	G.MİLİ ÖN BİLYA RAYNELİ	SHIM	2.70mm		◆
75	K20.01675	0730 106 909		1	G.MİLİ ÖN BİLYA RAYNELİ	SHIM	2.60mm		◆
75	K20.01748	0730 100 799		1	G.MİLİ ÖN BİLYA RAYNELİ	SHIM	2.50mm		◆
75	K20.01747	0730 100 801		1	G.MİLİ ÖN BİLYA RAYNELİ	SHIM	2.40mm		◆
75	K20.01746	0730 100 803		1	G.MİLİ ÖN BİLYA RAYNELİ	SHIM	2.30mm		◆
75	K20.01676	0730 101 467		1	G.MİLİ ÖN BİLYA RAYNELİ	SHIM	2.20mm		◆
75		0730 101 469		1	G.MİLİ ÖN BİLYA RAYNELİ	SHIM	2.10mm		◆
75	K20.01739	0730 106 906		1	G.MİLİ ÖN BİLYA RAYNELİ	SHIM	1.90mm		◆
75	K20.01752	2001752		1	G.MİLİ ÖN BİLYA RAYNELİ	SHIM	0.50mm		◆
75	K20.01778	2001778		1	G.MİLİ ÖN BİLYA RAYNELİ	SHIM	0.30mm		◆
75	K20.01679	2001679		1	G.MİLİ ÖN BİLYA RAYNELİ	SHIM	0.20mm		◆
75	K20.01680	2001680		1	G.MİLİ ÖN BİLYA RAYNELİ	SHIM	0.10mm		◆
76		0631 531 065		1	G.MİLİ ÖN BİLYA RAYNELİ	RETAINING RING	50x3mm		◆
77	K20.01126	0750 117 009	(0735 372 156)	2	G.MİLİ ÖN VE ARKA BİLYA	ROLLER BEARING	49.20x103.10x43.60mm		◆
78	K20.00199	1316 303 071	(1316 303 064)	1	TAK.DİŞLİ KARŞILIĞI 32 DİŞ	CONST GEAR 32 T			◆
79	K20.00203	1316 303 065		1	4.VİT. DİŞLİ KARŞILIĞI 35 DİŞ	GEAR 4th 35 T			◆
80	K20.00222	1316 303 040		1	3.VİT. DİŞLİ KARŞILIĞI 26 DİŞ	GEAR 3rd 26 T			◆
81	K20.00457	1316 303 038		1	GRUP MİLİ 17-20 DİŞ	COUNTER SHAFT 17-20 T			◆
82	K20.01338	0750 115 369		2	K.GERİ VİT. MASURA BİLYA	NEEDLE CAGE	45x57x25mm		◆
83	K20.00656	1316 305 001	(1316 305 008)	1	K.GERİ VİTES DİŞLİSİ 22 DİŞ	REV.IDLER GEAR 22 T			◆
84	K20.00657	1316 201 029		1	KÜÇÜK GERİ VİTES PİMİ	PIN			◆
85		1316 201 110		1	ŞANZIMAN ORTA GÖVDE	HOUSING			◆
86	K20.00813	1324 207 004	(1315 207 014)	1	İSTİNATLAMA FİŞEĞİ	DETENT PLUNGER	168 N		◆
87	K20.00819	1324 207 033	(1313 207 003)	1	İSTİNATLAMA FİŞEĞİ	DETENT PLUNGER	235 N		◆
88	K20.00838	1324 207 035	(1313 207 005)	1	İSTİNATLAMA FİŞEĞİ	DETENT PLUNGER	145 N		◆
			(1313 207 001)						

NOTES :

NOTLAR :

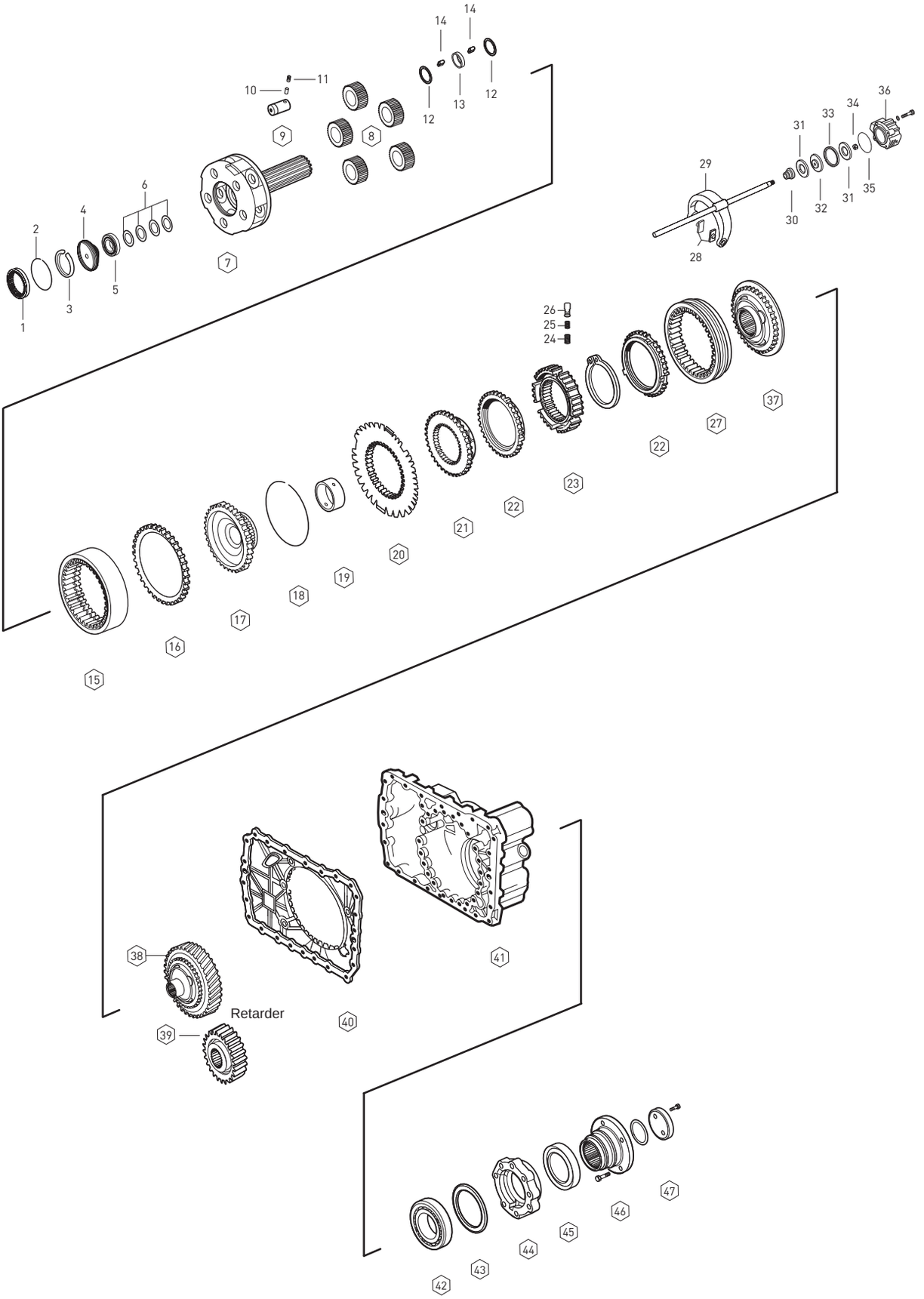

Original parts names, oem numbers, symbols and descriptions used in this catalogue are for reference purposes only.

Fig.	Kacmaz No.	Oem No	Oem Old No	Pcs.	Ürün Tanımı	Description	Sizes	Not	SG 13.80-0.84
1	K20.01693	1316 332 068		1	HEYKEL KOZA DİŞLİ AYAR PULU	PRESSURE DISC			◆
2	K20.01694	0630 513 243		1	HEY.KOZA DİŞ.PUL SEGMANI	SNAP RING	2.20mm		◆
2	K20.01695	0630 513 245		1	HEY.KOZA DİŞ.PUL SEGMANI	SNAP RING	1.60mm		◆
3	K20.01696	0730 513 680		1	ŞANZ.HEYKEL KAPAK SEGMANI	SNAP RING	7.00mm		◆
4	K20.01697	1316 332 069		1	ŞANZ.HEYKEL KAPAĞI	COVER			◆
5	K20.01138	0635 360 007		1	ŞANZ.HEYKEL KAPAK BİLYASI	BALL.BEARING	30.0X47.0X11.0mm		◆
6	K20.01698	0770 067 039		4	ŞANZ.HEY.KAPAK BİLYA SACI	CUP SPRING			◆
7	K20.00664	1316 232 021		1	ŞANZIMAN HEYKELİ	PLANETARY CARRIER			◆
7		1316 232 040		1	ŞANZIMAN HEYKELİ	PLANETARY CARRIER	NEW		◆
8	K20.00221	1316 232 017	(1316 332 043)	5	HEYKEL KOZA DİŞLİ TAKIMI	PLANETARY GEAR SET			◆
9	K20.00458	1316 332 097		5	HEYKEL KOZA DİŞLİ PİMİ	PLANET SHAFT			◆
9		1316 332 141		5	HEYKEL KOZA DİŞLİ PİMİ	PLANET SHAFT	NEW		◆
10		0631 329 051		5	HEYKEL KOZA DİŞLİ PİM KİLİT PİMİ	LOCK PIN			◆
10		0631 329 147		5	HEYKEL KOZA DİŞLİ PİM KİLİT PİMİ	LOCK PIN	NEW		◆
11		0631 329 167		5	HEYKEL KOZA DİŞLİ PİM KİLİT PİMİ	LOCK PIN			◆
11		0631 329 261		5	HEYKEL KOZA DİŞLİ PİM KİLİT PİMİ	LOCK PIN	NEW		◆
12	K20.01515	0730 109 323		10	HEYKEL KOZA DİŞLİ PULU	THRUST WASHER	2.30mm		◆
13	K20.01579	0730 162 801		5	HEYKEL KOZA DİŞLİ BURCU	THRUST WASHER	14.90mm		◆
14	K20.01454	0750 119 116		140	HEYK.KOZA DİŞLİ TANE BİLYA	NEEDLE ROLLER	10X16.8mm		◆
15	K20.00665	1316 332 042		1	ÇEMBER DİŞLİ	RING WHEEL			◆
16	K20.01699	1316 332 044		1	ÇEMBER DİŞLİ MESAFE PULU	THRUST RING			◆
17	K20.00666	1316 332 073		1	PLANET ÇAN DİŞLİ	CARRIER HUB			◆
18	K20.01700	0730 513 639		1	ÇEMBER DİŞLİ SEGMANI	SPRING RING			◆
19	K20.01578	1316 333 014		1	ŞANZIMAN HEYKEL BURCU	BUSHING			◆
20	K20.00464	1316 333 026	(1316 333 010)	1	TEPSİ SENKROMENÇ	FLANGE			◆
21	K20.00074	1296 333 050		1	AĞIR SERİ SENKROMENÇ	ENGAGING RING			◆
22	K20.00038	1296 333 045	(1296 333 022)	2	AĞIR SERİ SENK.FRENLEME	SYNCHRONIZING CONE			◆
			(0769 174 091)						
23	K20.00185	1313 333 001		1	AĞIR SERİ YILDIZ DİŞLİ	GUIDE SLEEVE			◆
24	K20.00469	0732 040 385		9	AĞIR SERİ YILDIZ DİŞLİ YAYI	SPRING			◆
25	K20.00470	0732 040 386		9	AĞIR SERİ YILDIZ DİŞLİ YAYI	SPRING			◆
26	K20.00471	1240 304 278		9	AĞIR SERİ YILDIZ DİŞLİ FİŞEĞİ	PRESSURE PIECE			◆
27	K20.00039	1296 333 023	(0769 186 286)	1	AĞIR SERİ SENK.HALKA	ENGAGING SLEEVE			◆
27	K20.00831	1316 333 034		1	AĞIR SERİ SENK.HALKA	ENGAGING SLEEVE	NEW		◆
28	K20.00341	1296 334 004		2	AĞIR SERİ HİLAL PABUCU	SLIDING PAD			◆
29	K20.00667	1316 334 011		1	AĞIR SERİ HİLALİ	GEAR SHIFT FORK			◆
30	K20.01026	0750 112 253	(0750 112 131)	1	AĞIR SERİ HİLAL MİL KEÇESİ	FLANGE PACKING	25.0X40.0X15.0mm		◆
31	K20.01019	0734 307 294	(0734 307 280)	2	AĞIR SERİ HAVA KEÇESİ	SEALING RING			◆
32	K20.01773	1315 334 034	(1315 334 063)	1	AĞIR SERİ HİLAL MİL PİSTONU	PISTON			◆
33	K20.01657	0750 112 066		1	AĞIR SERİ HİLAL MİL FİBERİ	GUIDE RING			◆
34	K20.01774	0737 006 095		1	AĞIR SERİ HİLAL MİL SOMUNU	NUT	M16X1.5mm		◆

NOTES :

NOTLAR :

Original parts names, oem numbers, symbols and descriptions used in this catalogue are for reference purposes only.

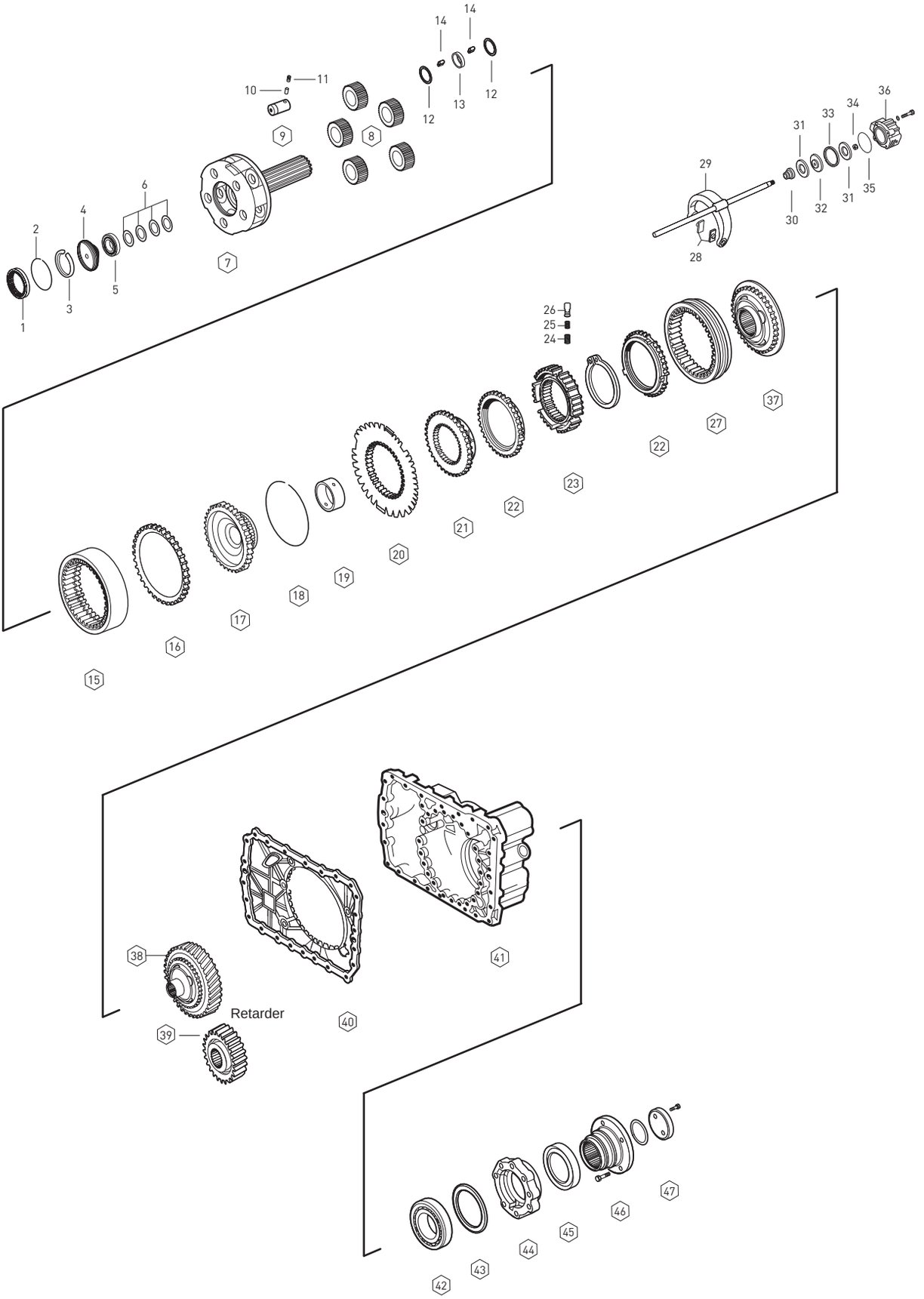

Original parts names, oem numbers, symbols and descriptions used in this catalogue are for reference purposes only.

Fig.	Kacmaz No.	Oem No	Oem Old No	Pcs.	Ürün Tanımı	Description	Sizes	Not	SG 13.80-0.98
35		0501 317 536		1	AĞIR SERİ SİLİNDİR ORİNGİ	O-RING	94.0X3.0mm		◆
36	K20.00842	1315 334 056		1	AĞIR SERİ SİLİNDİR GÖVDESİ	CYLINDER			◆
37	K20.00158	1316 233 015		1	SERİ SENKROMENÇ	ENGAGING RING			◆
37	K20.00896	1316 233 029	(1316 233 011)	1	SERİ SENKROMENÇ	ENGAGING RING	NEW		◆
38	K20.00403	1316 233 014		1	AĞIR SERİ SENKROMENÇ	ENGAGING RING	Retarder		◆
38	K20.00796	1316 233 028		1	AĞIR SERİ SENKROMENÇ	ENGAGING RING	Retarder - NEW		◆
39	K20.00649	6085 301 012		1	RETARDER DİŞLİSİ 29 DİŞ	GEAR (29 T)	Retarder		◆
40		1316 301 051		1	ŞANZIMAN ARKA GÖVDE PLEYTİ	INTERM.PLATE			◆
41		1315 301 224	(1315 301 223)	1	ŞANZIMAN ARKA GÖVDE	HOUSING			◆
42	K20.01134	0750 116 394	(0750 116 002)	1	ŞANZIMAN ARKA BİLYA	ROLLER BEARING	90X160X30mm		◆
			(0635 304 904)						
43	K20.01658	0730 100 115		1	ŞANZ.ARKA BİLYA RAYNELİ	SHIM	0.30mm		◆
43	K20.01659	0730 100 116		1	ŞANZ.ARKA BİLYA RAYNELİ	SHIM	0.20mm		◆
43	K20.01660	2001660		1	ŞANZ.ARKA BİLYA RAYNELİ	SHIM	0.10mm		◆
44		1315 231 004		1	ŞANZ.ARKA BİLYA KAPAĞI	BEARING COVER			◆
45	K20.01013	0750 111 341		1	ŞANZ.ARKA KAPAK KEÇESİ	OIL SEAL	105X130X12mm		◆
46	K20.00427	1297 333 110		1	ŞANZIMAN FLANŞI	COMPANION FLANGE	4-H, Ø180mm		◆
47	K20.01681	1312 332 028		1	ŞANZIMAN FLANŞ PULU	WASHER			◆

NOTES :

NOTLAR :

Original parts names, oem numbers, symbols and descriptions used in this catalogue are for reference purposes only.

SYNCHRONIZER KIT CONST.

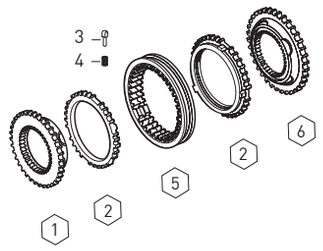

Fig.	Kacmaz No.	Oem No	Oem Old No	Pcs.	Ürün Tanımı	Description
	K20.00522	1297 298 955		Kit	TAKVİYE SENKROMENÇ KİT	SYNCHRONIZER KIT Const
1	K20.00101	1312 304 027		1	TAKVİYE SENKROMENÇ	ENGAGING RING
2	K20.00108	1297 304 484		2	TAKVİYE SENK.FRENLEME	SYNCHRONIZING CONE
3	K20.00111	1297 304 436		3	TAK.YILDIZ DİŞLİ FİŞEĞİ	PRESSURE PIECE
4	K20.00110	0732 040 409		3	TAKVİYE YILDIZ DİŞLİ YAYI	SPRING
5	K20.00098	1310 304 202	(1312 302 057)	1	TAKVİYE SENK.HALKA	ENGAGING SLEEVE
6	K20.00097	1312 304 056		1	TAKVİYE SENKROMENÇ	ENGAGING RING

SYNCHRONIZER KIT 3rd/4th

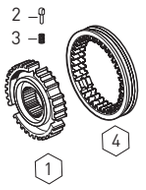

Fig.	Kacmaz No.	Oem No	Oem Old No	Pcs.	Ürün Tanımı	Description
	K20.00525	1312 204 028		Kit	3./4.VİT.HALKA YILDIZ KİTİ	SYNCH.KIT 3rd/4th
1	K20.00181	1312 304 052		1	3./4.VİT.YILDIZ DİŞLİ	GUIDE SLEEVE
2	K20.00111	1297 304 436		3	3./4.VİT.YILDIZ DİŞLİ FİŞEĞİ	PRESSURE PIECE
3	K20.00110	0732 040 409		3	3./4.VİT.YILDIZ DİŞLİ YAYI	SPRING
4	K20.00098	1310 304 202	(1312 302 057)	1	3./4.VİTES SENK.HALKA	ENGAGING SLEEVE

SYNCHRONIZER KIT 3rd/4th

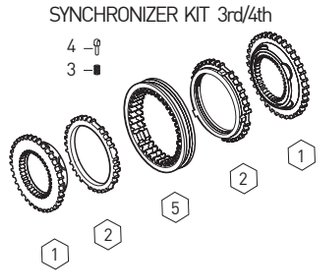

Fig.	Kacmaz No.	Oem No	Oem Old No	Pcs.	Ürün Tanımı	Description
	K20.00524	1315 298 030		Kit	3./4.VİT.SENKROMENÇ KİT	SYNCH.KIT 3rd/4th
1	K20.00101	1312 304 027		2	3./4.VİT.SENKROMENÇ	ENGAGING RING
2	K20.00108	1297 304 484		2	3./4.VİT.SENK.FRENLEME	SYNCHRONIZING CONE
3	K20.00111	1297 304 436		3	3./4.VİT.YILDIZ DİŞLİ FİŞEĞİ	PRESSURE PIECE
4	K20.00110	0732 040 409		3	3./4.VİT.YILDIZ DİŞLİ YAYI	SPRING
5	K20.00098	1310 304 202	(1312 302 057)	1	3./4.VİT.SENK.HALKA	ENGAGING SLEEVE

SYNCHRONIZER KIT 3rd/4th

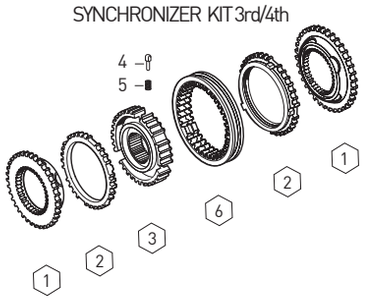

Fig.	Kacmaz No.	Oem No	Oem Old No	Pcs.	Ürün Tanımı	Description
	K20.00383	1315 298 018		Kit	3./4.VİT.SENKROMENÇ KİT	SYNCH.KIT 3rd/4th
1	K20.00101	1312 304 027		2	3./4.VİT.SENKROMENÇ	ENGAGING RING
2	K20.00108	1297 304 484		2	3./4.VİT.SENK.FRENLEME	SYNCHRONIZING CONE
3	K20.00181	1312 304 052		1	3./4.VİT.YILDIZ DİŞLİ	GUIDE SLEEVE
4	K20.00111	1297 304 436		3	3./4.VİT.YILDIZ DİŞLİ FİŞEĞİ	PRESSURE PIECE
5	K20.00110	0732 040 409		3	3./4.VİT.YILDIZ DİŞLİ YAYI	SPRING
6	K20.00098	1310 304 202	(1312 302 057)	1	3./4.VİT.SENK.HALKA	ENGAGING SLEEVE

SYNCHRONIZER KIT 3rd/4th

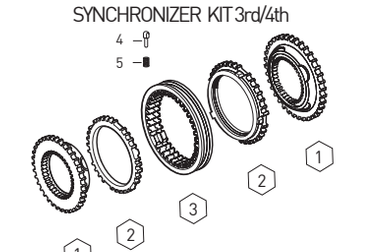

Fig.	Kacmaz No.	Oem No	Oem Old No	Pcs.	Ürün Tanımı	Description
	K20.00894	1315 298 067		Kit	3./4.VİT.SENKROMENÇ KİT	SYNCH.KIT 3rd/4th
1	K20.00102	1316 304 159	(1316 304 145)	2	3./4.VİT.SENKROMENÇ	ENGAGING RING
2	K20.00109	1316 304 168	(1316 304 149)	2	3./4.VİT.SENK.FRENLEME	SYNCH.CONE
3	K20.00103	1316 304 167	(1315 304 135)	1	3./4.VİT.SENK.HALKA	ENGAGING SLEEVE
4	K20.00111	1297 304 436		3	3./4.VİT.YILDIZ DİŞLİ FİŞEĞİ	PRESSURE PIECE
5	K20.00110	0732 040 409		3	3./4.VİT.YILDIZ DİŞLİ YAYI	SPRING

SYNCHRONIZER KIT 3rd/4th

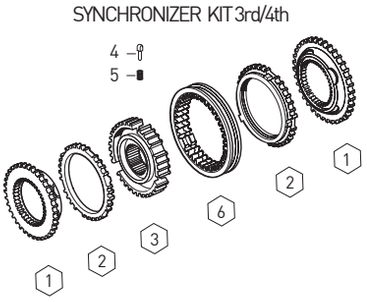

Fig.	Kacmaz No.	Oem No	Oem Old No	Pcs.	Ürün Tanımı	Description
	K20.00088	1315 298 061		kit	3./4.VİT.SENKROMENÇ KİT	SYNCH.KIT 3rd/4th
1	K20.00102	1316 304 159	(1316 304 145)	2	3./4.VİT.SENKROMENÇ	ENGAGING RING
2	K20.00109	1316 304 168	(1316 304 149)	2	3./4.VİT.SENK.FRENLEME	SYNCHRONIZING CONE
3	K20.00136	1316 304 162		1	3./4.VİT.YILDIZ DİŞLİ	GUIDE SLEEVE
4	K20.00111	1297 304 436		3	3./4.VİT.YILDIZ DİŞLİ FİŞEĞİ	PRESSURE PIECE
5	K20.00110	0732 040 409		3	3./4.VİT.YILDIZ DİŞLİ YAYI	SPRING
6	K20.00103	1316 304 167	(1315 304 135)	1	3./4.VİT.SENK.HALKA	ENGAGING SLEEVE

SYNCHRONIZER KIT 3rd/4th/CONST.

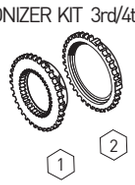

Fig.	Kacmaz No.	Oem No	Oem Old No	Pcs.	Ürün Tanımı	Description
	K20.00523	1312 204 031		Kit	TAK.3./4.VİT.SENK.KİT	SYNCH.KIT 3rd/4th/Const.
1	K20.00101	1312 304 027		1	TAK.3./4.VİT.SENKROMENÇ	ENGAGING RING
2	K20.00108	1297 304 484	(1297 304 402)	1	TAK.3./4.VİT.FRENLEME	SYNCHRONIZING CONE

Original parts names, oem numbers, symbols and descriptions used in this catalogue are for reference purposes only.

Fig.	Kacmaz No.	Oem No	Oem Old No	Pcs.	Ürün Tanımı	Description
	K20.00794	1316 204 016	(1316 204 014)	kit	3./4.VİT.FRENLEME KİTİ	SYNCH.KIT 3rd/4th
1	K20.00109	1316 304 168	(1316 304 149)	2	3./4.VİT.SENK.FRENLEME	SYNCHRONIZING CONE
2	K20.00136	1316 304 162		1	3./4.VİT.YILDIZ DİŞLİ	GUIDE SLEEVE
3	K20.00111	1297 304 436		3	3./4.VİT.YILDIZ DİŞLİ FİŞEĞİ	PRESSURE PIECE
4	K20.00110	0732 040 409		3	3./4.VİT.YILDIZ DİŞLİ YAYI	SPRING
5	K20.00103	1316 304 167	(1315 304 135)	1	TAKVİYE SENK.HALKA	ENGAGING SLEEVE

SYNCHRONIZER KIT 3rd/4th

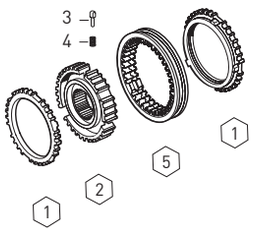

Fig.	Kacmaz No.	Oem No	Oem Old No	Pcs.	Ürün Tanımı	Description
	K20.00879	1325 298 008		Kit	3./4.VİT.FRENLEME KİTİ	SYNCH.KIT 3rd/4th
1	K20.00881	1316 304 190		2	3./4.VİT.SENKROMENÇ	ENGAGING RING
2	K20.00880	1316 304 189		2	3./4.VİT.SENK.FRENLEME	SYNCHRONIZING CONE
3	K20.00111	1297 304 436		3	3./4.VİT.YILDIZ DİŞLİ FİŞEĞİ	PRESSURE PIECE
4	K20.00110	0732 040 409		3	3./4.VİT.YILDIZ DİŞLİ YAYI	SPRING
5	K20.00871	1356 304 023		1	TAKVİYE SENK.HALKA	ENGAGING SLEEVE

SYNCHRONIZER KIT 3rd/4th

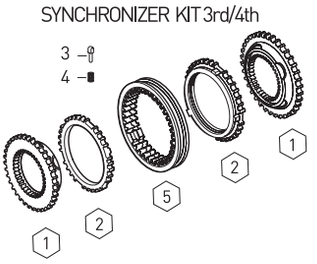

Fig.	Kacmaz No.	Oem No	Oem Old No	Pcs.	Ürün Tanımı	Description
	K20.01794	1356 204 006		Kit	3./4.VİT.FRENLEME KİTİ	SYNCH.KIT 3rd/4th
1	K20.00881	1316 304 190		2	3./4.VİT.SENKROMENÇ	ENGAGING RING
2	K20.00880	1316 304 189		2	3./4.VİT.SENK.FRENLEME	SYNCHRONIZING CONE
3	K20.00898	1356 304 019		1	3./4.VİT.YILDIZ DİŞLİ	GUIDE SLEEVE
4	K20.00111	1297 304 436		3	3./4.VİT.YILDIZ DİŞLİ FİŞEĞİ	PRESSURE PIECE
5	K20.00110	0732 040 409		3	3./4.VİT.YILDIZ DİŞLİ YAYI	SPRING
6	K20.00871	1356 304 023		1	TAKVİYE SENK.HALKA	ENGAGING SLEEVE

SYNCHRONIZER KIT 3rd/4th

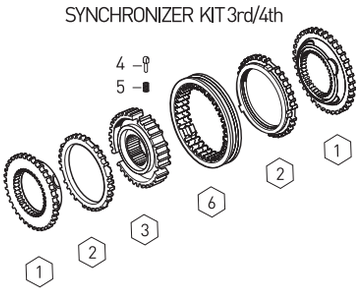

Fig.	Kacmaz No.	Oem No	Oem Old No	Pcs.	Ürün Tanımı	Description
	K20.00529	1313 204 009		Kit	1./2.VİT.SENKROMENÇ KİT	SYNCH.KIT 1st/2nd
1	K20.00182	1313 304 009		1	1./2.VİT.SENKROMENÇ	ENGAGING RING
2	K20.00112	1297 304 485	(1297 304 401)	1	1./2.VİT.SENK.FRENLEME	SYNCHRONIZING CONE

SYNCHRONIZER KIT 1st/2nd

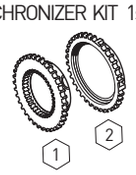

Fig.	Kacmaz No.	Oem No	Oem Old No	Pcs.	Ürün Tanımı	Description
	K20.00528	1313 204 008		Kit	1./2.VİT.HALKA YILDIZ KİTİ	SYNCH.KIT 1st/2nd
1	K20.00179	1313 304 008		1	1./2.VİT.YILDIZ DİŞLİ	GUIDE SLEEVE
2	K20.00111	1297 304 436		3	1./2.VİT.YILDIZ DİŞLİ FİŞEĞİ	PRESSURE PIECE
3	K20.00110	0732 040 409		3	1./2.VİT.YILDIZ DİŞLİ YAYI	SPRING
4	K20.00115	1316 304 078		1	1./2.VİT.SENK.HALKA	ENGAGING SLEEVE

SYNCHRONIZER KIT 1st/2nd

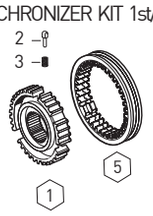

Fig.	Kacmaz No.	Oem No	Oem Old No	Pcs.	Ürün Tanımı	Description
	K20.00893	1315 298 066		Kit	1./2.VİT.SENKROMENÇ KİT	SYNCH.KIT 1st/2nd
1	K20.00183	1316 304 156		2	1./2.VİT.SENKROMENÇ	ENGAGING RING
2	K20.00113	1316 304 170	(1316 304 150)	2	1./2.VİT.FRENLEME	SYNCH.CONE
3	K20.00114	1316 304 169	(1315 304 136)	1	1./2.VİT.SENK.HALKA	ENGAGING SLEEVE
4	K20.00111	1297 304 436		3	1./2.VİT.YILDIZ DİŞLİ FİŞEĞİ	PRESSURE PIECE
5	K20.00110	0732 040 409		3	1./2.VİT.YILDIZ DİŞLİ YAYI	SPRING

SYNCHRONIZER KIT 1st/2nd

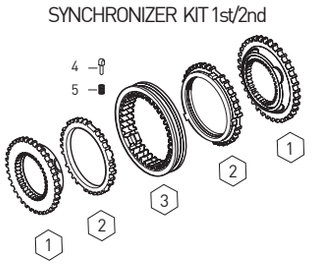

Fig.	Kacmaz No.	Oem No	Oem Old No	Pcs.	Ürün Tanımı	Description
	K20.00087	1315 298 060	(1316 204 017)	Kit	1./2.VİT.SENKROMENÇ KİT	SYNCH.KIT 1st/2nd
1	K20.00183	1316 304 156		2	1./2.VİT.SENKROMENÇ	ENGAGING RING
2	K20.00113	1316 304 170	(1316 304 150)	2	1./2.VİT.FRENLEME	SYNCH.CONE
3	K20.00180	1316 304 163	(1316 304 148)	1	1./2.VİT.YILDIZ DİŞLİ	GUIDE SLEEVE
4	K20.00111	1297 304 436		3	1./2.VİT.YILDIZ DİŞLİ FİŞEĞİ	PRESSURE PIECE
5	K20.00110	0732 040 409		3	1./2.VİT.YILDIZ DİŞLİ YAYI	SPRING
6	K20.00114	1316 304 169	(1315 304 136)	1	1./2.VİT.SENK.HALKA	ENGAGING SLEEVE

SYNCHRONIZER KIT 1st/2nd

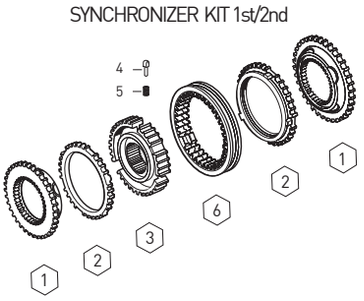

Original parts names, oem numbers, symbols and descriptions used in this catalogue are for reference purposes only.

SYNCHRONIZER KIT 1st/2nd

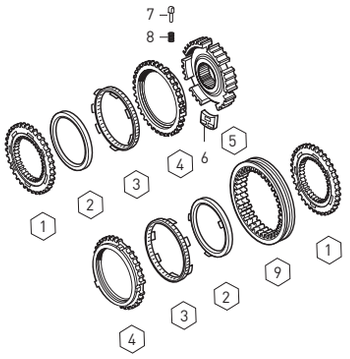

Fig.	Kacmaz No.	Oem No	Oem Old No	Pcs.	Ürün Tanımı	Description
	K20.00482	1315 204 006	(1312 298 911)	kit	1./2.VİT.SENKROMENÇ KİT	SYNCH.KIT 1st/2nd
1	K20.00143	1312 304 106		2	1./ 2.VİT.SENKROMENÇ	ENGAGING RING
2	K20.00144	1268 304 424		2	1./ 2.VİT.SENK.FRENLEME	SYNCHRONIZING CONE
3	K20.00302	1268 304 494	(1268 304 491)	2	1./ 2.VİT.SENK.FRENLEME	INTERMEDIATE CONE
4	K20.00145	1268 304 525		2	1./ 2.VİT.SENK.FRENLEME	SYNCHRONIZING CONE
5	K20.00146	1312 304 158		1	1./ 2.VİT.YILDIZ DİŞLİ	GUIDE SLEEVE
6	K20.00209	1312 304 159		3	1./ 2.VİT.YIL.DİŞLİ BAKLASI	SLIDING BLOCK
7	K20.00111	1297 304 436		3	1./ 2.VİT.YILDIZ DİŞLİ FİŞEĞİ	PRESSURE PIECE
8	K20.00110	0732 040 409		3	1./ 2.VİT.YILDIZ DİŞLİ YAYI	SPRING
9	K20.00147	1310 304 175	(1312 304 157)	1	1./ 2.VİT.SENK.HALKA	ENGAGING SLEEVE

SYNCHRONIZER KIT 1st/2nd

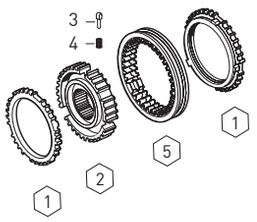

Fig.	Kacmaz No.	Oem No	Oem Old No	Pcs.	Ürün Tanımı	Description
	K20.00526	1313 204 003		kit	1./2.VİT.SENKROMENÇ KİT	SYNCH.KIT 1st/2nd
1	K20.00112	1297 304 485	(1297 304 401)	2	1./2.VİT.FRENLEME	SYNCH.CONE
2	K20.00179	1313 304 008		1	1./2.VİT.YILDIZ DİŞLİ	GUIDE SLEEVE
3	K20.00111	1297 304 436		3	1./2.VİT.YILDIZ DİŞLİ FİŞEĞİ	PRESSURE PIECE
4	K20.00110	0732 040 409		3	1./2.VİT.YILDIZ DİŞLİ YAYI	SPRING
5	K20.00115	1316 304 078		1	1./2.VİT.SENK.HALKA	ENGAGING SLEEVE

SYNCHRONIZER KIT 1st/2nd

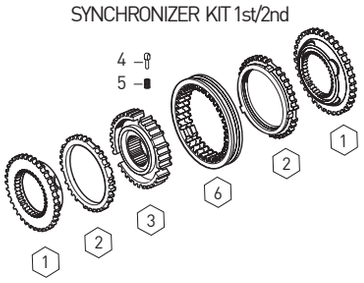

Fig.	Kacmaz No.	Oem No	Oem Old No	Pcs.	Ürün Tanımı	Description
	K20.00527	1313 298 909		kit	1./2.VİT.SENKROMENÇ KİT	SYNCH.KIT 1st/2nd
1	K20.00182	1313 304 009		2	1./2.VİT.SENKROMENÇ	ENGAGING RING
2	K20.00112	1297 304 485	(1297 304 401)	2	1./2.VİT.FRENLEME	SYNCH.CONE
3	K20.00179	1313 304 008		1	1./2.VİT.YILDIZ DİŞLİ	GUIDE SLEEVE
4	K20.00111	1297 304 436		3	1./2.VİT.YILDIZ DİŞLİ FİŞEĞİ	PRESSURE PIECE
5	K20.00110	0732 040 409		3	1./2.VİT.YILDIZ DİŞLİ YAYI	SPRING
6	K20.00115	1316 304 078		1	1./2.VİT.SENK.HALKA	ENGAGING SLEEVE

SYNCHRONIZER KIT 1st/2nd

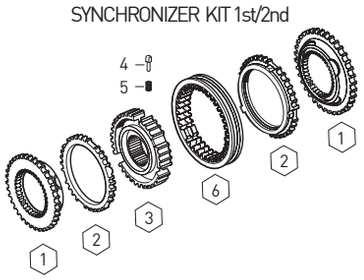

Fig.	Kacmaz No.	Oem No	Oem Old No	Pcs.	Ürün Tanımı	Description
	K20.00903	1356 204 004		kit	1./2.VİT.SENKROMENÇ KİT	SYNCH.KIT 1st/2nd
1	K20.00183	1316 304 156		2	1./2.VİT.SENKROMENÇ	ENGAGING RING
2	K20.00113	1316 304 170		2	1./2.VİT.FRENLEME	SYNCH.CONE
3	K20.00889	1356 204 022		1	1./2.VİT.YILDIZ DİŞLİ	GUIDE SLEEVE
4	K20.00111	1297 304 436		3	1./2.VİT.YILDIZ DİŞLİ FİŞEĞİ	PRESSURE PIECE
5	K20.00110	0732 040 409		3	1./2.VİT.YILDIZ DİŞLİ YAYI	SPRING
6	K20.00803	1356 304 024		1	1./2.VİT.SENK.HALKA	ENGAGING SLEEVE

SYNCHRONIZER KIT PLANETARY

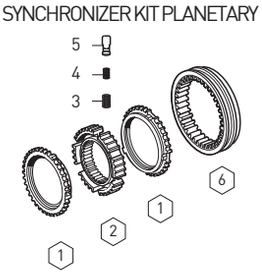

Fig.	Kacmaz No.	Oem No	Oem Old No	Pcs.	Ürün Tanımı	Description
	K20.00532	1315 233 029		kit	AĞIR SERİ SENK.KİT	SYNCHRONIZER KIT
1	K20.00038	1296 333 045	(1296 333 022)	2	AĞIR SERİ FRENLEME	SYNCHRONIZING CONE
2	K20.00185	1313 333 001		1	AĞIR SERİ YILDIZ DİŞLİ	GUIDE SLEEVE
3	K20.00469	0732 040 385		9	AĞIR SERİ YILDIZ DİŞLİ YAYI	SPRING
4	K20.00470	0732 040 386		9	AĞIR SERİ YILDIZ DİŞLİ YAYI	SPRING
5	K20.00471	1240 304 278		9	AĞIR SERİ YILDIZ DİŞ.FİŞEĞİ	PRESSURE PIECE
6	K20.00039	1296 333 023		1	AĞIR SERİ SENK.HALKA	ENGAGING SLEEVE

SYNCHRONIZER KIT PLANETARY

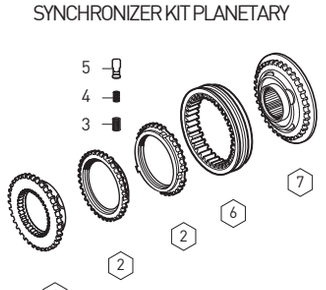

Fig.	Kacmaz No.	Oem No	Oem Old No	Pcs.	Ürün Tanımı	Description
	K20.00546	1315 298 034		Kit	AĞIR SERİ SENK.KİT	SYNCHRONIZER KIT
1	K20.00074	1296 333 050		1	AĞIR SERİ SENKROMENÇ	ENGAGING RING
2	K20.00038	1296 333 045	(1296 333 022)	2	AĞIR SERİ FRENLEME	SYNCHRONIZING CONE
3	K20.00469	0732 040 385		9	AĞIR SERİ YILDIZ DİŞLİ YAYI	SPRING
4	K20.00470	0732 040 386		9	AĞIR SERİ YILDIZ DİŞLİ YAYI	SPRING
5	K20.00471	1240 304 278		9	AĞIR SERİ YILDIZ DİŞ.FİŞEĞİ	PRESSURE PIECE
6	K20.00039	1296 333 023		1	AĞIR SERİ SENK.HALKA	ENGAGING SLEEVE
7	K20.00158	1316 233 015		1	SERİ SENKROMENÇ	ENGAGING RING

Original parts names, oem numbers, symbols and descriptions used in this catalogue are for reference purposes only.

Fig.	Kacmaz No.	Oem No	Oem Old No	Pcs.	Ürün Tanımı	Description
	K20.00906	2000906		kit	AĞIR SERİ SENK.KİT	SYNCHRONIZER KIT
1	K20.00074	1296 333 050		1	AĞIR SERİ SENKROMENÇ	ENGAGING RING
2	K20.00038	1296 333 045	(1296 333 022)	2	AĞIR SERİ FRENLEME	SYNCHRONIZING CONE
3	K20.00469	0732 040 385		9	AĞIR SERİ YILDIZ DİŞLİ YAYI	SPRING
4	K20.00470	0732 040 386		9	AĞIR SERİ YILDIZ DİŞLİ YAYI	SPRING
5	K20.00471	1240 304 278		9	AĞIR SERİ YILDIZ DİŞ.FİŞEĞİ	PRESSURE PIECE
6	K20.00831	1316 333 034		1	AĞIR SERİ SENK.HALKA	ENGAGING SLEEVE
7	K20.00896	1316 233 011	(1316 233 029)	1	SERİ SENKROMENÇ	ENGAGING RING

SYNCHRONIZER KIT PLANETARY

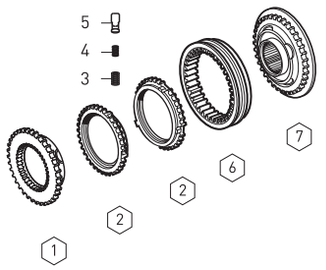

Fig.	Kacmaz No.	Oem No	Oem Old No	Pcs.	Ürün Tanımı	Description
	K20.00907	2000907		kit	AĞIR SERİ SENK.KİT	SYNCHRONIZER KIT
1	K20.00074	1296 333 050		1	AĞIR SERİ SENKROMENÇ	ENGAGING RING
2	K20.00038	1296 333 045	(1296 333 022)	2	AĞIR SERİ FRENLEME	SYNCHRONIZING CONE
3	K20.00185	1313 333 001		1	AĞIR SERİ YILDIZ DİŞLİ	GUIDE SLEEVE
4	K20.00469	0732 040 385		9	AĞIR SERİ YILDIZ DİŞLİ YAYI	SPRING
5	K20.00470	0732 040 386		9	AĞIR SERİ YILDIZ DİŞLİ YAYI	SPRING
6	K20.00471	1240 304 278		9	AĞIR SERİ YILDIZ DİŞ.FİŞEĞİ	PRESSURE PIECE
7	K20.00831	1316 333 034		1	AĞIR SERİ SENK.HALKA	ENGAGING SLEEVE
8	K20.00896	1316 233 011	(1316 233 029)	1	SERİ SENKROMENÇ	ENGAGING RING

SYNCHRONIZER KIT PLANETARY

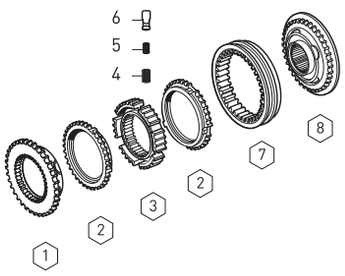

Fig.	Kacmaz No.	Oem No	Oem Old No	Pcs.	Ürün Tanımı	Description
	K20.00545	1315 298 029		kit	AĞIR SERİ SENK.KİT	SYNCHRONIZER KIT
1	K20.00074	1296 333 050		1	AĞIR SERİ SENKROMENÇ	ENGAGING RING
2	K20.00038	1296 333 045	(1296 333 022)	2	AĞIR SERİ FRENLEME	SYNCHRONIZING CONE
3	K20.00185	1313 333 001		1	AĞIR SERİ YILDIZ DİŞLİ	GUIDE SLEEVE
4	K20.00469	0732 040 385		9	AĞIR SERİ YILDIZ DİŞLİ YAYI	SPRING
5	K20.00470	0732 040 386		9	AĞIR SERİ YILDIZ DİŞLİ YAYI	SPRING
6	K20.00471	1240 304 278		9	AĞIR SERİ YILDIZ DİŞ.FİŞEĞİ	PRESSURE PIECE
7	K20.00039	1296 333 023		1	AĞIR SERİ SENK.HALKA	ENGAGING SLEEVE
8	K20.00158	1316 233 015		1	SERİ SENKROMENÇ	ENGAGING RING

SYNCHRONIZER KIT PLANETARY

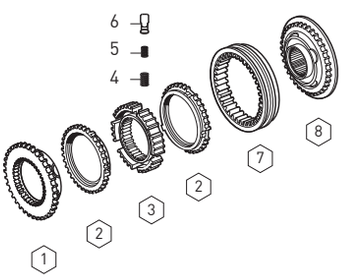

Fig.	Kacmaz No.	Oem No	Oem Old No	Pcs.	Ürün Tanımı	Description
1		1296 313 131		1	P.KİLİT EMNİYET SACI	RETAINING RING
2		0730 104 627		1	PARÇALI KİLİT	SPLIT RING
3		1296 313 238		1	PTO MİL KOVANI	SLIDING SLEEVE
4		0730 104 628		1	PTO DİŞLİ AYAR PULU	THRUST WASHER
5		1296 313 082		1	PTO DİŞLİ	GEAR 33 T
5		1296 313 083		1	PTO DİŞLİ	GEAR 36 T
5		1296 313 084		1	PTO DİŞLİ	GEAR 38 T
5		1296 313 085		1	PTO DİŞLİ	GEAR 39 T
5		1296 313 086		1	PTO DİŞLİ	GEAR 46 T
6	K20.00556	1296 213 028		1	PTO MİLİ DÜZ	INTERM.SHAFT
7	K20.00555	1296 213 028		1	PTO MİLİ FREZELİ	INTERM.SHAFT (Milled)
8		1296 313 125		1	PTO MİL SOMUNU	NUT
9		0735 410 139		1	PTO MİL BİLYASI	ROLLER BEARING
10		7429 032 102		1	PTO BİLYA KAPAK PULU	THRUST WASHER
11		1232 304 062		1	PTO BİLYA KAPAK RAYNELİ	SHIM (1.00mm)
11		1232 304 063		1	PTO BİLYA KAPAK RAYNELİ	SHIM (0.90mm)
11		1232 304 072		1	PTO BİLYA KAPAK RAYNELİ	SHIM (0.70mm)
12		1250 313 190		1	PTO BAĞLANTI KAPAĞI	COVER
13	K20.01013	0750 111 341		1	ŞANZ.ARKA KAPAK KEÇESİ	OIL SEAL

P.T.O. (POWER TAKE OFF)

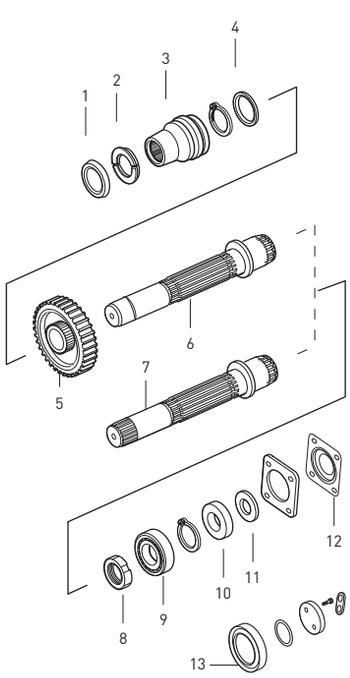

GEARBOX GASKET KIT

Fig.	Kacmaz No.	Oem No	Oem Old No	Pcs.	Ürün Tanımı	Description
1	K20.01585	1315 298 001		Kit	ŞANZIMAN CONTA TAKIMI	GASKET KIT
2		1315 301 233		1	ŞANZ.ÖN GÖVDE CONTASI	GASKET
3		0501 314 246		1	PRİZ.KEÇE KAPAK CONTASI	GASKET
3		0501 314 587		1	PRİZ.KEÇE KAPAK CONTASI	GASKET
4		1316 301 042		2	ŞANZ.ARKA GÖVDE CONTASI	GASKET
4		1315 301 007		2	ŞANZ.ARKA GÖVDE CONTASI	GASKET
5		0501 318 308		2	ŞANZ.KULE KAPAK CONTASI	GASKET
6		1315 307 012		1	ŞANZ.KULESİ GÖVDE CONTASI	GASKET
7		1315 307 013		1	ŞANZ.KULE ALT KAPAK CONTASI	GASKET
8		0501 317 240		1	ŞANZ.KULE ÜST KAPAK CONTASI	GASKET
9		1315 331 001		1	ŞANZ.BİLYA KAPAK CONTASI	GASKET
10	K20.02108	1238 308 201		1	PTO BAĞLANTI KAPAK CONTASI	GASKET
11		0501 316 146		1	ŞANZ.DAMPER CONTASI	GASKET
11		1315 301 234		1	ŞANZ.DAMPER CONTASI	GASKET
12		1316 301 022		1	ŞANZ.MÜŞÜR KAPAK CONTASI	GASKET
13		1315 303 060		1	YAĞ POMPA CONTASI	GASKET
14		1315 307 242		1	SERVO KULE PİSTON CONTASI	GASKET

GEARBOX GASKET KIT

Fig.	Kacmaz No.	Oem No	Oem Old No	Pcs.	Ürün Tanımı	Description	Sizes
	K20.01039	1315 298 002		Kit	KEÇE TAKIMI	SEAL KIT	
1	K20.01037	0634 300 302	(0734 300 196)	1	KEÇE	OIL SEAL	25X35X7mm
2	K20.01036	0634 307 367		1	KEÇE	OIL SEAL	25X35X7/10mm
3	K20.01008	0734 310 104		1	PRİZDİREK KEÇESİ	OIL SEAL	52X68X8mm
4	K20.01034	0501 312 738	(0501 325 918)	4	KEÇE	OIL SEAL	30X37X4mm
5	K20.01035	0634 300 020		1	KEÇE	OIL SEAL	25X32X5mm
6	K20.01003	0734 310 387	(0734 310 311)	1	PRİZDİREK KEÇESİ	OIL SEAL	55X75X8mm
7	K20.01038	0734 309 765	(0734 309 376)	1	KEÇE	OIL SEAL	28X42X11mm
8	K20.01013	0750 111 341	(0734 319 551)	1	ŞANZ.FLANŞ KEÇESİ	OIL SEAL	105X130X12mm

GEARBOX GASKET KIT

Fig.	Kacmaz No.	Oem No	Oem Old No	Pcs.	Ürün Tanımı	Description	Sizes
	K20.01044	1315 298 003		kit	KEÇE TAKIMI	SEAL KIT	
1	K20.01016	0750 112 034		2	TAK.HİLAL MİL KEÇESİ	OIL SEAL	25X38X14.2mm
2	K20.01026	0750 112 131		2	HİLAL MİL KEÇESİ	OIL SEAL	25X40X15mm
3	K20.01019	0734 307 294	(0734 307 280)	2	A.SERİ HAVA KEÇESİ	OIL SEAL	50X91X7.5mm
4	K20.01024	0734 317 150	(0750 112 019)	2	A.SERİ HAVA KEÇESİ	OIL SEAL	80X90X4.8mm
5	K20.01779	0501 324 670		1	TAK.SİLİNDİR PİSTONU	PISTON	
6	K20.01657	0750 112 066	(0501 307 769)	1	A.SERİ HİLAL MİL FİBERİ	RING	85X90X5.5mm
7	K20.01020	0750 112 177		1	SİLİNDİR HAVA KEÇESİ	OIL SEAL	55X63X9.4mm
8		0634 801 062		12	ALM.PUL	SEAL RING	18X24X1.4mm
9		0634 801 097		1	ALM.PUL	WASHER	30X36mm
10		0634 801 173		5	ALM.PUL	WASHER	22X27mm
11		0634 801 203		1	ALM.PUL	SEAL RING	16X22X1.4mm
12		0634 801 206		5	ALM.PUL	SEAL RING	24X29mm
13		0634 801 219		2	ALM.PUL	SEAL RING	16X22X1.4mm
14		0634 801 249		1	ALM.PUL	SEAL RING	
15		0634 801 321		1	ALM.PUL	WASHER	
16		0730 008 055		1	ALM.PUL	WASHER	
17		0730 008 056		1	ALM.PUL	WASHER	
18		0730 008 057		8	ALM.PUL	WASHER	
19		0734 303 046		1	ORİNG	O-RING	
20		0634 314 020		4	ORİNG	O-RING	
21		0634 313 198		1	ORİNG	O-RING	
22		0634 313 293		1	ORİNG	O-RING	
23		0634 313 320		1	ORİNG	O-RING	
24		0634 313 018		1	ORİNG	O-RING	
25		0634 313 505		1	ORİNG	O-RING	
26		0634 314 015		1	ORİNG	O-RING	
27	K20.02113	0634 313 805		1	ORİNG	O-RING	
28		0634 314 021		2	ORİNG	O-RING	
29		0634 312 523		1	LASTİK KEÇE	RING	
30		0501 317 536		1	KANALLI ORİNG	RING	

Original parts names, oem numbers, symbols and descriptions used in this catalogue are for reference purposes only.

ECOSPLIT IV	
16 S 1920 TD	16 S 2231 TO
16 S 1921 TD	16 S 2233 TD
16 S 1923 TD	16 S 2235 TD
16 S 1925 TD	16 S 2235 TO
16 S 1930 TD	16 S 2320 TD
16 S 1931 TD	16 S 2321 TD
16 S 1933 TD	16 S 2323 TD
16 S 1935 TD	16 S 2325 TD
16 S 2030 TDL	16 S 2330 TD
16 S 2031 TDL	16 S 2331 TD
16 S 2033 TDL	16 S 2333 TD
16 S 2220 TD	16 S 2335 TD
16 S 2220 TO	16 S 2520 TO
16 S 2221 TD	16 S 2521 TO
16 S 2221 TO	16 S 2525 TO
16 S 2223 TD	16 S 2530 TO
16 S 2225 TD	16 S 2531 TO
16 S 2225 TO	16 S 2535 TO
16 S 2230 TD	16 S 2731 TO
16 S 2230 TO	16 S 2733 TO
16 S 2231 TD	16 S 2735 TO

Original parts names, oem numbers, symbols and descriptions used in this catalogue are for reference purposes only.

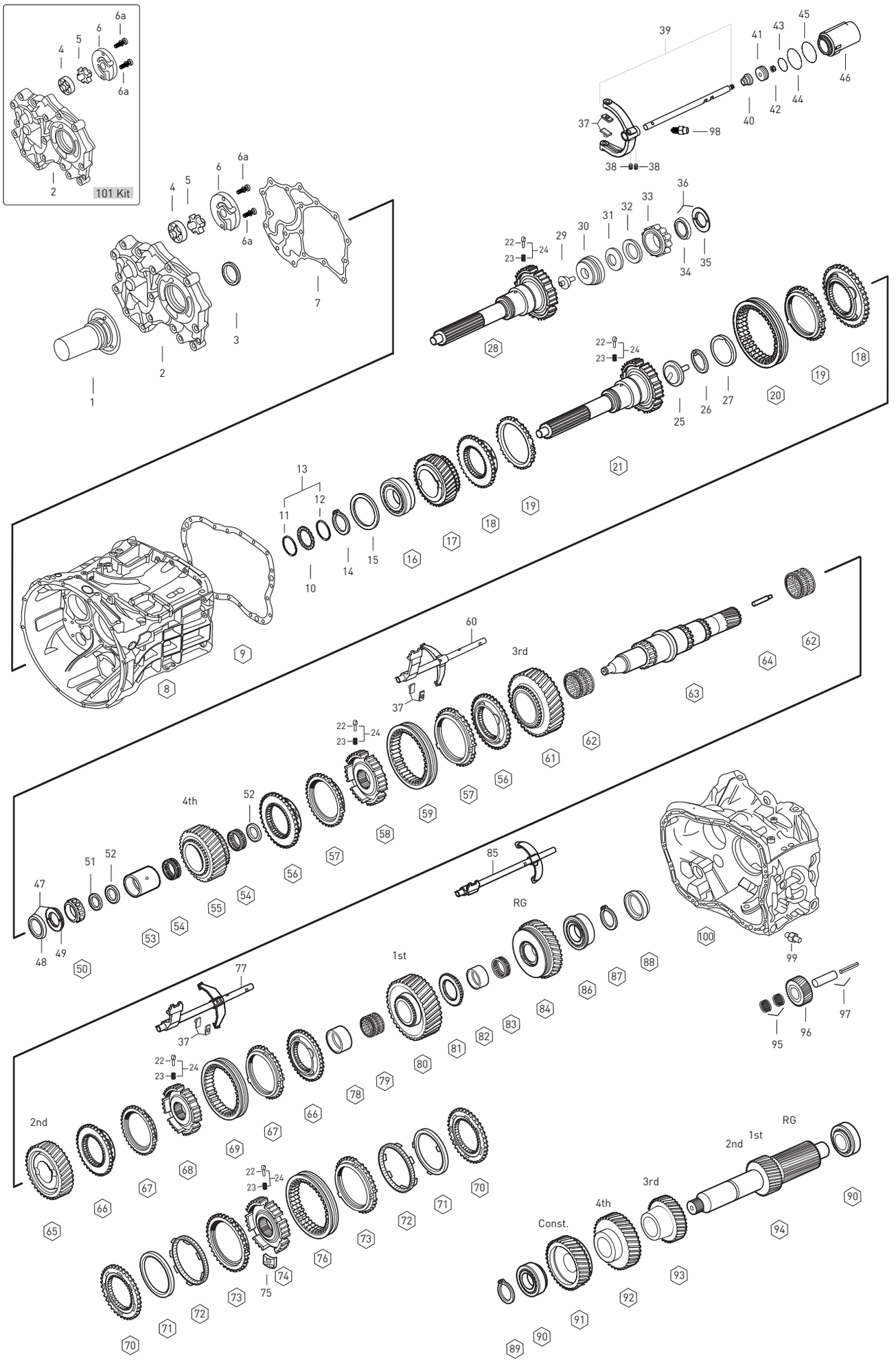

Original parts names, oem numbers, symbols and descriptions used in this catalogue are for reference purposes only.

Fig.	Kacmaz No.	Oem No	Oem Old No	Pcs.	Ürün Tanımı	Description	Sizes	Not	(X1).TD 16.41-1.00	(X2).TO 13.80-0.84	(X3).TD 16.41-1.00	(X4).TD 16.41-1.00	(X5).TD 16.41-1.00	(X6).TO 13.80-0.84
1		1315 302 029		1	PRİZDİREK KEÇE KAPAĞI YATAĞI	GUIDE TUBE		(I)(D)(F)	◆	◆	◆	◆	◆	◆
2	K20.01074	1325 302 052		1	PRİZDİREK KEÇE KAPAĞI	COVER		(I)(D)			◆	◆	◆	◆
2	K20.01070	1325 302 044		1	PRİZDİREK KEÇE KAPAĞI	COVER		(R)	◆	◆				
2	K20.01075	1325 302 048		1	PRİZDİREK KEÇE KAPAĞI	COVER		(R)(F)	◆	◆	◆	◆	◆	◆
2	K20.01076	1325 302 055		1	PRİZDİREK KEÇE KAPAĞI	COVER		(M)	◆	◆	◆	◆	◆	◆
3	K20.01032	0734 310 435		1	PRİZDİREK KEÇESİ	OIL SEAL	55x78x8mm		◆	◆	◆	◆	◆	◆
4	K20.00543	1315 303 027		1	YAĞ POMPA DIŞ ROTOR	ROTOR			◆	◆	◆	◆	◆	◆
5	K20.00542	1314 202 039		1	YAĞ POMPA İÇ ROTOR	PUMP GEAR			◆	◆	◆	◆	◆	◆
6	K20.00873	1325 303 017		1	YAĞ POMPA KAPAĞI	COVER			◆	◆	◆	◆	◆	◆
6a		0736 101 076		2	YAĞ POMPA KAPAK VİDASI	SCREW			◆	◆	◆	◆	◆	◆
7		0501 324 454		1	ŞANZIMAN ÖN GÖVDE CONTASI	GASKET			◆	◆	◆	◆	◆	◆
8		1325 201 025		1	ŞANZIMAN ÖN GÖVDE	HOUSING		(I)(F)					◆	◆
8		1325 201 024		1	ŞANZIMAN ÖN GÖVDE	HOUSING		(R)	◆	◆				
8		1325 201 026		1	ŞANZIMAN ÖN GÖVDE	HOUSING		(D)			◆	◆		
8		1325 201 044		1	ŞANZIMAN ÖN GÖVDE	HOUSING		(M)			◆	◆	◆	◆
9		0501 322 766		1	ŞANZIMAN ÖN GÖVDE CONTASI	GASKET			◆	◆	◆	◆	◆	◆
10		1315 302 040		1	P.DİREK YAĞLAMA SACI	SPACER RING			◆	◆	◆	◆	◆	◆
11	K20.01530	0730 150 766		1	P.DİREK YAĞLAMA PULU	THRUST WASHER			◆	◆	◆	◆	◆	◆
12	K20.01796	0730 300 745		1	P.DİREK YAĞLAMA PULU	THRUST WASHER			◆	◆	◆	◆	◆	◆
13	K20.01804	2001804		kit	P.DİREK YAĞLAMA PUL TAKIMI	THRUST WASHER KIT			◆	◆	◆	◆	◆	◆
14	K20.01897	0730 501 598		1	P.DİREK B.BİLYA SEGMANI	RETAINING RING	2.00mm		◆	◆	◆	◆	◆	◆
15	K20.01683	0730 007 486		1	PRİZ.ÖN BİLYA RAYNELİ	SHIM	1.65mm		◆	◆	◆	◆	◆	◆
15	K20.01685	0730 007 479		1	PRİZ.ÖN BİLYA RAYNELİ	SHIM	1.60mm		◆	◆	◆	◆	◆	◆
15	K20.01686	0730 007 136		1	PRİZ.ÖN BİLYA RAYNELİ	SHIM	1.25mm		◆	◆	◆	◆	◆	◆
15	K20.01687	0730 007 129		1	PRİZ.ÖN BİLYA RAYNELİ	SHIM	0.90mm		◆	◆	◆	◆	◆	◆
15	K20.01668	0730 005 748		1	PRİZ.ÖN BİLYA RAYNELİ	SHIM	0.30mm		◆	◆	◆	◆	◆	◆
15	K20.01671	2050 309 067		1	PRİZ.ÖN BİLYA RAYNELİ	SHIM	0.25mm		◆	◆	◆	◆	◆	◆
15	K20.01582	0730 005 747		1	PRİZ.ÖN BİLYA RAYNELİ	SHIM	0.20mm		◆	◆	◆	◆	◆	◆
15	K20.01672	2050 309 068		1	PRİZ.ÖN BİLYA RAYNELİ	SHIM	0.10mm		◆	◆	◆	◆	◆	◆
15	K20.01673	2001673		1	PRİZ.ÖN BİLYA RAYNELİ	SHIM	85x150x30.50mm		◆	◆	◆	◆	◆	◆
16	K20.01104	0750 117 732		1	P.DİREK ÖN BİLYA	ROLLER BEARING			◆	◆	◆	◆	◆	◆
17	K20.00196	1316 302 066	(1316 302 026)	1	TAKVİYE DİŞLİSİ 30 DİŞ	CONSTANT GEAR 30 T			◆		◆	◆	◆	
17	K20.00195	1316 302 067		1	TAKVİYE DİŞLİSİ 35 DİŞ	CONSTANT GEAR 35 T				◆				◆
18	K20.00881	1316 304 190		2	TAKVİYE SENKROMENÇ	ENGAGING RING			◆	◆	◆	◆	◆	◆
19	K20.00880	1316 304 189		2	TAKVİYE FRENLEME	SYNCRONIZING CONE			◆	◆	◆	◆	◆	◆
20	K20.00871	1356 304 023	(1316 304 188)	1	TAKVİYE HALKA	ENGAGING SLEEVE			◆	◆	◆	◆	◆	◆
21	K20.00809	1356 302 101	(1316 302 219)	1	PRİZDİREK	INPUT SHAFT		(R)	◆	◆				
21	K20.00923	1356 302 100	(1316 302 226)	1	PRİZDİREK	INPUT SHAFT		(M)(D)			◆			
21	K20.01893	1356 302 103	(1316 302 221)	1	PRİZDİREK	INPUT SHAFT		(I)(F)					◆	◆
22	K20.00111	1297 304 436		9	PRİZ.VE YILDIZ DİŞLİ FİŞEĞİ	PRESSURE PIECE			◆	◆	◆	◆	◆	◆
23	K20.00110	0732 040 409		9	PRİZ.VE YILDIZ DİŞLİ FİŞEK YAYI	SPRING			◆	◆	◆	◆	◆	◆

NOTES :

X1,X2,X3,X4,X5,X6 are used in conjunction with the encoded parts

Alphabetical Coding has been done according to Input Shaft

X1:16 S 1930 TD-16 S 1931 TD-16 S 1935 TD-16 S 2230 TD-16 S 2231 TD-16 S 2235 TD

X2:16 S 2230 TO-16 S 2231 TO-16 S 2235 TO-16 S 2530 TO-16 S 2731 TO-16 S 2733 TO 16 S 2735 TO

X3:16 S 1930 TD-16 S 1931 TD-16 S 2030 TDL-16 S 2031 TDL-16 S 2230 TD-16 S 2231 TD 16 S 2235 TD-16 S 2320 TD-16 S 2321 TD-16 S 2325 TD-16 S 2330 TD-16 S 2335 TD

X4:16 S 1923 TD-16 S 1933 TD-16 S 2033 TDL-16 S 2223 TD-16 S 2233 TD-16 S 2323 16 S 2331 TD-16 S 2333 TD

X5:16 S 1920 TD-16 S 1921 TD-16 S 1925 TD-16 S 1930 TD-16 S 2220 TD-16 S 2221 TD-16 S 2225 TD 16 S 2230 TD-16 S 2231 TD-16 S 2235 TD-16 S 2320 TD-16 S 2320 TD-16 S 2325 TD-16 S 2330 TD

X6:16 S 2220 TO-16 S 2221 TO-16 S 2230 TO-16 S 2235 TO-16 S 2520 TO-16 S 2521 TO-16 S 2525 TO 16 S 2530 TO-16 S 2531 TO-16 S 2535 TO-16 S 2733 TO

NOTLAR :

X1,X2,X3,X4,X5,X6 ile kodlanan parçalar birlikte kullanılır

Alfabetik kodlamalar prizdireklere göre yapılmıştır.

X1:16 S 1930 TD-16 S 1931 TD-16 S 1935 TD-16 S 2230 TD-16 S 2231 TD-16 S 2235 TD

X2:16 S 2230 TO-16 S 2231 TO-16 S 2235 TO-16 S 2530 TO-16 S 2731 TO-16 S 2733 TO 16 S 2735 TO

X3:16 S 1930 TD-16 S 1931 TD-16 S 2030 TDL-16 S 2031 TDL-16 S 2230 TD-16 S 2231 TD 16 S 2235 TD-16 S 2320 TD-16 S 2321 TD-16 S 2325 TD-16 S 2330 TD-16 S 2335 TD

X4:16 S 1923 TD-16 S 1933 TD-16 S 2033 TDL-16 S 2223 TD-16 S 2233 TD-16 S 2323 16 S 2331 TD-16 S 2333 TD

X5:16 S 1920 TD-16 S 1921 TD-16 S 1925 TD-16 S 1930 TD-16 S 2220 TD-16 S 2221 TD-16 S 2225 TD 16 S 2230 TD-16 S 2231 TD-16 S 2235 TD-16 S 2320 TD-16 S 2320 TD-16 S 2325 TD-16 S 2330 TD

X6:16 S 2220 TO-16 S 2221 TO-16 S 2230 TO-16 S 2235 TO-16 S 2520 TO-16 S 2521 TO-16 S 2525 TO 16 S 2530 TO-16 S 2531 TO-16 S 2535 TO-16 S 2733 TO

Original parts names, oem numbers, symbols and descriptions used in this catalogue are for reference purposes only.

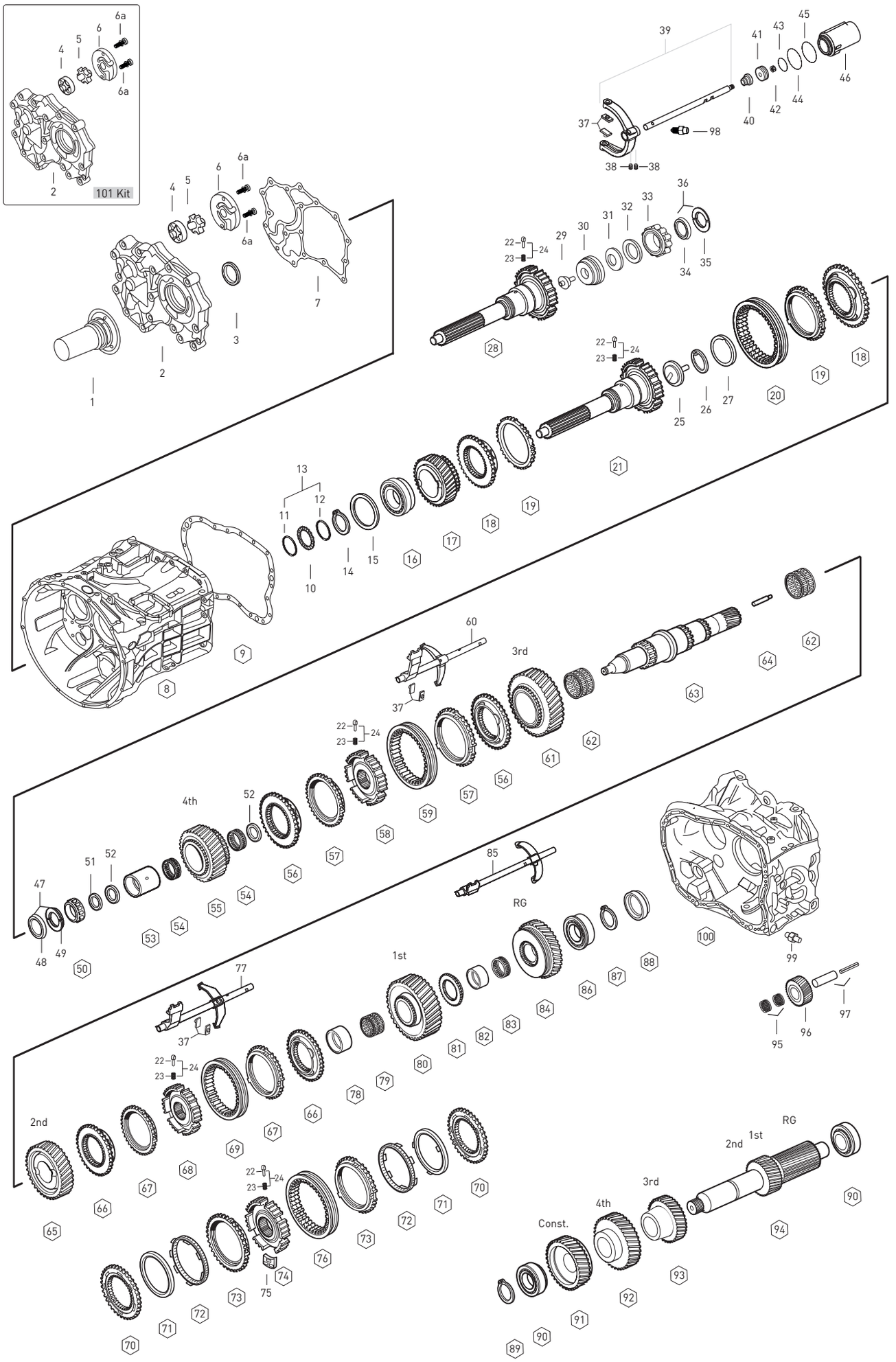

Original parts names, oem numbers, symbols and descriptions used in this catalogue are for reference purposes only.

Fig.	Kacmaz No.	Oem No	Oem Old No	Pcs.	Ürün Tanımı	Description	Sizes	Notes	(X1).TD 16.41-1.00	(X2).TO 13.80-0.84	(X3).TD 16.41-1.00	(X4).TD 16.41-1.00	(X5).TD 16.41-1.00	(X6).TO 13.80-0.84
24	K20.01745	1295 298 956		kit	YAY FİŞEK TAKIMI	REPAIR KIT			◆	◆	◆	◆	◆	◆
25	K20.01504	1315 302 196		1	PRİZDİREK YAĞ PİPETİ	OIL PIPET			◆	◆	◆	◆	◆	◆
26	K20.01505	0630 502 027		1	P.DİREK YAĞ.PİPET SEGMANI	RETAINING RING	50.0X2.0mm		◆	◆	◆	◆	◆	◆
27	K20.01011	0501 314 060	(0750 101 179)	1	PRİZDİREK ARKA KEÇE	OIL SEAL			◆	◆	◆	◆	◆	◆
28	K20.01792	1356 302 116	(1316 302 234)	1	PRİZDİREK	INPUT SHAFT		(M)(D)				◆		
28	K20.01951	1356 302 117		1	PRİZDİREK	INPUT SHAFT		(R)				◆		
29		1315 302 194		1	PRİZDİREK YAĞ BORUSU	OIL PIPE						◆		
30		0735 368 084		1	BİLYA TAKIMI	REPAIR KIT						◆		
31		0501 321 940		1	KONİK PUL	THRUST WASHER						◆		
32		0730 110 908		1	PUL	THRUST WASHER	5.25mm					◆		
33		0735 455 298		1	KAMALI MİL UÇ BİLYA	ROLLER BEARING	44x82x28mm					◆		
34		0730 301 956		1	PARÇALI KİLİT	SPLIT RING	4.20mm					◆		
34		0730 110 034		1	PARÇALI KİLİT	SPLIT RING	4.30mm					◆		
34		0730 110 035		1	PARÇALI KİLİT	SPLIT RING	4.40mm					◆		
34		0730 110 036		1	PARÇALI KİLİT	SPLIT RING	4.50mm					◆		
34		0730 110 037		1	PARÇALI KİLİT	SPLIT RING	4.60mm					◆		
35		0730 110 034		1	PARÇALI KİLİT EMNİYET SACI	RETAINING RING						◆		
36		1316 204 010		1	EMNİYET SACI VE KİLİT TAKIMI	SPLIT RING KIT						◆		
37	K20.00325	1316 306 015		6	HİLAL PABUCU	SLIDING PAD			◆	◆	◆	◆	◆	◆
38	K20.01688	1315 312 047		1	TAKVİYE HİLAL VİDASI	SCREW			◆	◆	◆	◆	◆	◆
39		1356 212 002		1	TAKVİYE HİLALİ	G.S.FORK AND RAIL ASSY			◆	◆	◆	◆	◆	◆
40	K20.01026	0750 112 253	(0750 112 131)	1	ŞAPKALI KEÇE	FLANGE PACKING	25x40x15mm		◆	◆	◆	◆	◆	◆
41	K20.01779	0501 324 670		1	TAKVİYE PİSTON SİLİNDİRİ	PISTON			◆	◆	◆	◆	◆	◆
42	K20.01774	0737 300 037		1	TAKVİYE HİLAL MİL SOMUNU	NUT	M16x1.50mm		◆	◆	◆	◆	◆	◆
43		0634 313 320		1	TAKVİYE SİLİNDİR ORİNGİ	O-RING	67x3mm		◆	◆	◆	◆	◆	◆
44	K20.01689	1315 312 034		1	TAKVİYE SİLİNDİR SEGMANI	RETAINING RING			◆	◆	◆	◆	◆	◆
45		0634 313 018		1	TAKVİYE SİLİNDİR ORİNGİ	O-RING	82x3mm		◆	◆	◆	◆	◆	◆
46	K20.00874	1325 312 012		1	TAKVİYE SİLİNDİR GÖVDESİ	CYLINDER			◆	◆	◆	◆	◆	◆
47	K20.01561	1499 298 027		1	EMN.SACI VE P.KİLİT TAKIMI	SPLIT RING KIT	5.00mm		◆	◆	◆	◆	◆	◆
47	K20.01563	1499 298 026		1	EMN.SACI VE P.KİLİT TAKIMI	SPLIT RING KIT	4.90mm		◆	◆	◆	◆	◆	◆
47	K20.01565	1499 298 025		1	EMN.SACI VE P.KİLİT TAKIMI	SPLIT RING KIT	4.80mm		◆	◆	◆	◆	◆	◆
47	K20.01567	1499 298 024		1	EMN.SACI VE P.KİLİT TAKIMI	SPLIT RING KIT	4.70mm		◆	◆	◆	◆	◆	◆
47	K20.01569	1499 298 023		1	EMN.SACI VE P.KİLİT TAKIMI	SPLIT RING KIT	4.60mm		◆	◆	◆	◆	◆	◆
48	K20.01571	0730 062 781		1	PARÇALI KİLİT EMNİYET SACI	RETAINIG RING			◆	◆	◆	◆	◆	◆
49	K20.01562	0730 107 023		2	PARÇALI KİLİT	SPLIT RING	5.00mm		◆	◆	◆	◆	◆	◆
49	K20.01564	0730 107 022		2	PARÇALI KİLİT	SPLIT RING	4.90mm		◆	◆	◆	◆	◆	◆
49	K20.01581	2001581		2	PARÇALI KİLİT	SPLIT RING	4.85mm		◆	◆	◆	◆	◆	◆
49	K20.01566	0730 107 021		2	PARÇALI KİLİT	SPLIT RING	4.80mm		◆	◆	◆	◆	◆	◆
49	K20.01568	0730 107 020		2	PARÇALI KİLİT	SPLIT RING	4.70mm		◆	◆	◆	◆	◆	◆
49	K20.01570	0730 107 019		2	PARÇALI KİLİT	SPLIT RING	4.60mm		◆	◆	◆	◆	◆	◆
50	K20.01109	0750 117 232	(0735 371 563)	1	KAMALI MİL UÇ BİLYA	ROLLER BEARING	42.07X82.5X40.0mm		◆	◆	◆	◆	◆	◆

NOTES :

X1,X2,X3,X4,X5,X6 are used in conjunction with the encoded parts

Alphabetical Coding has been done according to Input Shaft

X1:16 S 1930 TD-16 S 1931 TD-16 S 1935 TD-16 S 2230 TD-16 S 2231 TD-16 S 2235 TD

X2:16 S 2230 TO-16 S 2231 TO-16 S 2235 TO-16 S 2530 TO-16 S 2731 TO-16 S 2733 TO 16 S 2735 TO

X3:16 S 1930 TD-16 S 1931 TD-16 S 2030 TDL-16 S 2031 TDL-16 S 2230 TD-16 S 2231 TD 16 S 2235 TD-16 S 2320 TD-16 S 2321 TD-16 S 2325 TD-16 S 2330 TD-16 S 2335 TD

X4:16 S 1923 TD-16 S 1933 TD-16 S 2033 TDL-16 S 2223 TD-16 S 2233 TD-16 S 2323 16 S 2331 TD-16 S 2333 TD

X5:16 S 1920 TD-16 S 1921 TD-16 S 1925 TD-16 S 1930 TD-16 S 2220 TD-16 S 2221 TD-16 S 2225 TD 16 S 2230 TD-16 S 2231 TD-16 S 2235 TD-16 S 2320 TD-16 S 2320 TD-16 S 2325 TD-16 S 2330 TD

X6:16 S 2220 TO-16 S 2221 TO-16 S 2230 TO-16 S 2235 TO-16 S 2520 TO-16 S 2521 TO-16 S 2525 TO 16 S 2530 TO-16 S 2531 TO-16 S 2535 TO-16 S 2733 TO

NOTLAR :

X1,X2,X3,X4,X5,X6 ile kodlanan parçalar birlikte kullanılır

Alfabetik kodlamalar prizdireklere göre yapılmıştır.

X1:16 S 1930 TD-16 S 1931 TD-16 S 1935 TD-16 S 2230 TD-16 S 2231 TD-16 S 2235 TD

X2:16 S 2230 TO-16 S 2231 TO-16 S 2235 TO-16 S 2530 TO-16 S 2731 TO-16 S 2733 TO 16 S 2735 TO

X3:16 S 1930 TD-16 S 1931 TD-16 S 2030 TDL-16 S 2031 TDL-16 S 2230 TD-16 S 2231 TD 16 S 2235 TD-16 S 2320 TD-16 S 2321 TD-16 S 2325 TD-16 S 2330 TD-16 S 2335 TD

X4:16 S 1923 TD-16 S 1933 TD-16 S 2033 TDL-16 S 2223 TD-16 S 2233 TD-16 S 2323 16 S 2331 TD-16 S 2333 TD

X5:16 S 1920 TD-16 S 1921 TD-16 S 1925 TD-16 S 1930 TD-16 S 2220 TD-16 S 2221 TD-16 S 2225 TD 16 S 2230 TD-16 S 2231 TD-16 S 2235 TD-16 S 2320 TD-16 S 2320 TD-16 S 2325 TD-16 S 2330 TD

X6:16 S 2220 TO-16 S 2221 TO-16 S 2230 TO-16 S 2235 TO-16 S 2520 TO-16 S 2521 TO-16 S 2525 TO 16 S 2530 TO-16 S 2531 TO-16 S 2535 TO-16 S 2733 TO

Original parts names, oem numbers, symbols and descriptions used in this catalogue are for reference purposes only.

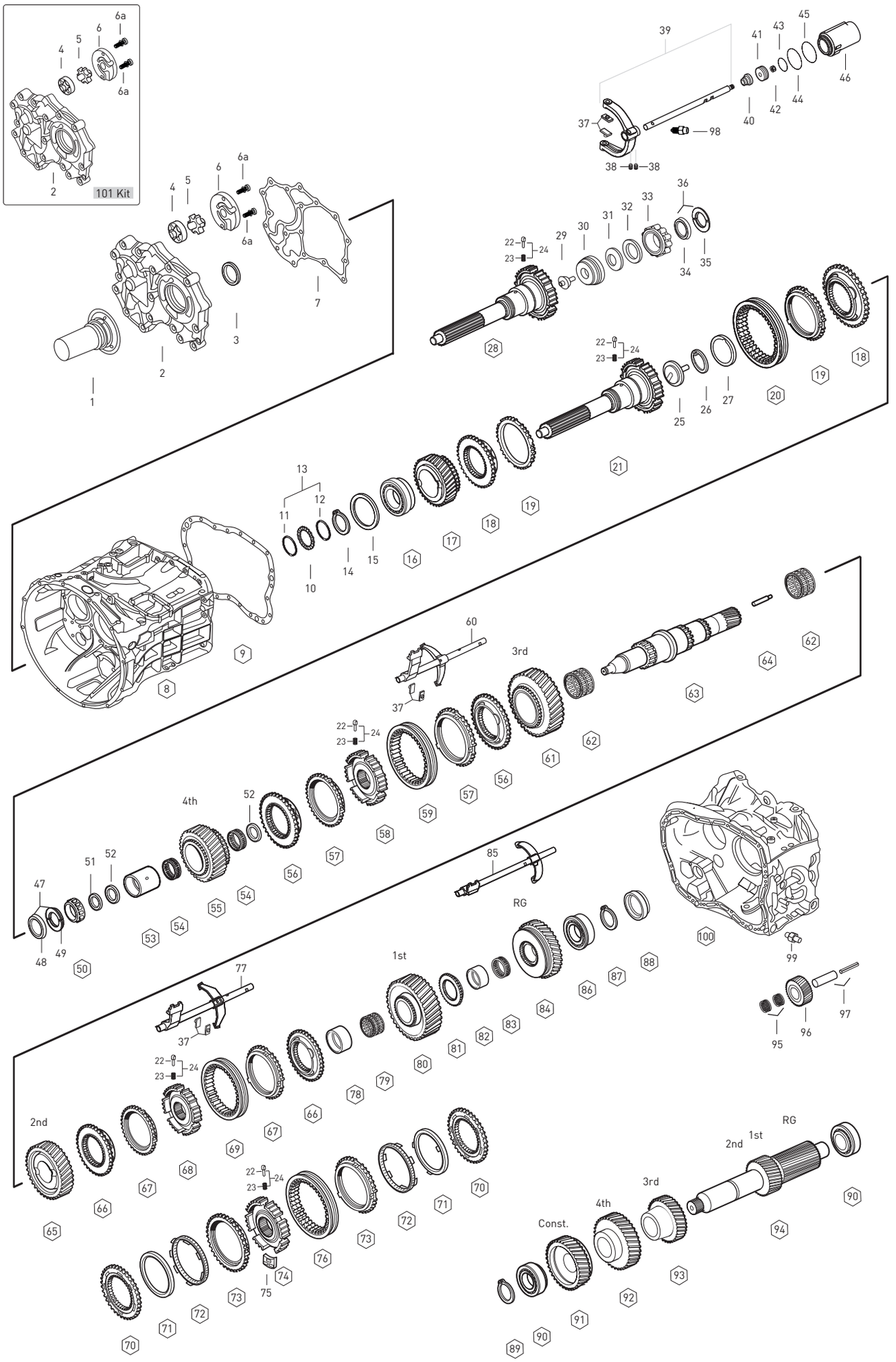

Original parts names, oem numbers, symbols and descriptions used in this catalogue are for reference purposes only.

Fig.	Kacmaz No.	Oem No	Oem Old No	Pcs.	Ürün Tanımı	Description	Sizes	(X1).TD 16.41-1.00	(X2).TO 13.80-0.84	(X3).TD 16.41-1.00	(X4).TD 16.41-1.00	(X5).TD 16.41-1.00	(X6).TO 13.80-0.84
51	K20.01781	1315 304 051		1	KAMALI MİL UÇ BİLYA PULU	THRUST WASHER	8.30mm	◆	◆	◆	◆	◆	◆
51	K20.01527	1315 304 048		1	KAMALI MİL UÇ BİLYA PULU	THRUST WASHER	8.00mm	◆	◆	◆	◆	◆	◆
51	K20.01528	1315 304 047		1	KAMALI MİL UÇ BİLYA PULU	THRUST WASHER	7.90mm	◆	◆	◆	◆	◆	◆
51	K20.01529	1315 304 046		1	KAMALI MİL UÇ BİLYA PULU	THRUST WASHER	7.80mm	◆	◆	◆	◆	◆	◆
51	K20.01762	1315 304 045		1	KAMALI MİL UÇ BİLYA PULU	THRUST WASHER	7.70mm	◆	◆	◆	◆	◆	◆
51	K20.01763	1315 304 044		1	KAMALI MİL UÇ BİLYA PULU	THRUST WASHER	7.60mm	◆	◆	◆	◆	◆	◆
51	K20.01764	1315 304 043		1	KAMALI MİL UÇ BİLYA PULU	THRUST WASHER	7.50mm	◆	◆	◆	◆	◆	◆
51	K20.01765	1315 304 085		1	KAMALI MİL UÇ BİLYA PULU	THRUST WASHER	7.40mm	◆	◆	◆	◆	◆	◆
51	K20.01766	1315 304 086		1	KAMALI MİL UÇ BİLYA PULU	THRUST WASHER	7.30mm	◆	◆	◆	◆	◆	◆
52	K20.01533	0750 101 158		2	4.VİTES ÇANAK ALIN PULU	THRUST WASHER		◆	◆	◆	◆	◆	◆
53	K20.00388	0750 119 124		1	4.VİTES MASURA BİLYA ÇANAĞI	BEARING RACE	66x77x66.10mm	◆	◆	◆	◆	◆	◆
54	K20.01303	0750 115 531	(0750 115 534)	2	4.VİTES DİŞLİ MASURA BİLYA	NEEDLE CAGE	77x101x29mm	◆	◆	◆	◆	◆	◆
55	K20.00208	1316 304 103		1	4.VİTES DİŞLİSİ 32 DİŞ	GEAR 4th 32 T		◆	◆	◆	◆	◆	◆
56	K20.00881	1316 304 190		2	3./ 4.VİTES SENKROMENÇ	ENGAGING RING		◆	◆	◆	◆	◆	◆
57	K20.00880	1316 304 189		2	3./ 4.VİTES SENK.FRENLEME	SYNCHRONIZING CONE		◆	◆	◆	◆	◆	◆
58	K20.00898	1356 304 019		1	3./ 4.VİTES YILDIZ DİŞLİ	GUIDE SLEEVE		◆	◆	◆	◆	◆	◆
59	K20.00871	1356 304 023	(1316 304 188)	1	3./ 4.VİTES SENKROMENÇ HALKA	ENGAGING SLEEVE		◆	◆	◆	◆	◆	◆
60		1356 206 004		1	3./4.VİTES HİLALİ	GEAR SHIT FORK 3rd/4th		◆	◆	◆	◆	◆	◆
61	K20.00211	1316 304 008		1	3.VİTES DİŞLİSİ 34 DİŞ	GEAR 3rd 34 T		◆	◆	◆	◆	◆	◆
62	K20.01326	0750 115 303	(0735 321 094)	2	2./3.VİTES MASURA BİLYA	NEEDLE CAGE	92x100x63mm	◆	◆	◆	◆	◆	◆
63	K20.00301	1316 304 132	(1316 304 079)	1	KAMALI MİL	MAIN SHAFT		◆	◆	◆		◆	◆
62	K20.00948	1316 304 118		1	KAMALI MİL	MAIN SHAFT					◆		
64	K20.01506	1324 304 014	(1312 304 150)	1	KAMALI MİL YAĞ BORUSU	OIL PIPE		◆	◆	◆	◆	◆	◆
65	K20.00213	1316 304 002		1	2.VİTES DİŞLİSİ 38 DİŞ	GEAR 2nd 38 T		◆	◆	◆	◆	◆	◆
66	K20.00183	1316 304 156		2	1./ 2.VİTES SENKROMENÇ	ENGAGING RING		◆	◆	◆	◆	◆	◆
67	K20.00113	1316 304 170	(1316 304 150)	2	1./ 2.VİT.SENK.FRENLEME	SYNCHRONIZING CONE		◆	◆	◆	◆	◆	◆
68	K20.00889	1356 304 022		1	1./ 2.VİT.YILDIZ DİŞLİ	GUIDE SLEEVE		◆	◆	◆	◆	◆	◆
69	K20.00803	1356 304 024		1	1./ 2.VİT.SENKROMENÇ HALKA	ENGAGING SLEEVE		◆	◆	◆	◆	◆	◆
70	K20.00143	1312 304 106		2	1./ 2.VİT.SENKROMENÇ	ENGAGING RING				◆	◆		
71	K20.00144	1268 304 424		2	1./ 2.VİT.SENK.FRENLEME	SYNCHRONIZING CONE				◆	◆		
72	K20.00302	1268 304 494	(1268 304 491)	2	1./ 2.VİT.SENK.FRENLEME	INTERMEDIATE CONE				◆	◆		
73	K20.00145	1268 304 525		2	1./ 2.VİT.SENK.FRENLEME	SYNCHRONIZING CONE				◆	◆		
74	K20.00146	1312 304 158		1	1./ 2.VİT.YILDIZ DİŞLİ	GUIDE SLEEVE				◆	◆		
75	K20.00209	1312 304 159		3	1./ 2.VİT.YILDIZ DİŞ.BAKLASI	SLIDING BLOCK				◆	◆		
76	K20.00147	1310 304 175	(1312 304 157)	1	1./ 2.VİT.SENK.HALKA	ENGAGING SLEEVE				◆	◆		
77		1356 206 002		1	1./2.VİTES HİLALİ	GEAR SHIFT FORK 1st/2nd		◆	◆	◆	◆	◆	◆
78	K20.00389	1312 304 084		1	1.VİTES MAS.BİLYA ÇANAĞI	BEARING RACE		◆	◆	◆	◆	◆	◆
79	K20.01328	0750 115 327		1	1.VİTES MASURA BİLYA	NEEDLE CAGE		◆	◆	◆	◆	◆	◆
80	K20.00420	1316 304 010		1	1.VİTES DİŞLİSİ 47 DİŞ	GEAR 1st 47 T		◆	◆	◆	◆	◆	◆
81	K20.00421	1312 304 124		1	GERİ VİTES YILDIZ DİŞLİ	HUB		◆	◆	◆	◆	◆	◆
82	K20.00422	1316 304 133	(1312 304 082)	1	GERİ VİT.MAS.BİL.ÇANAĞI	BEARING RACE		◆	◆	◆	◆	◆	◆

NOTES :

X1,X2,X3,X4,X5,X6 are used in conjunction with the encoded parts

Alphabetical Coding has been done according to Input Shaft

X1:16 S 1930 TD-16 S 1931 TD-16 S 1935 TD-16 S 2230 TD-16 S 2231 TD-16 S 2235 TD

X2:16 S 2230 TO-16 S 2231 TO-16 S 2235 TO-16 S 2530 TO-16 S 2731 TO-16 S 2733 TO 16 S 2735 TO

X3:16 S 1930 TD-16 S 1931 TD-16 S 2030 TDL-16 S 2031 TDL-16 S 2230 TD-16 S 2231 TD 16 S 2235 TD-16 S 2320 TD-16 S 2321 TD-16 S 2325 TD-16 S 2330 TD-16 S 2335 TD

X4:16 S 1923 TD-16 S 1933 TD-16 S 2033 TDL-16 S 2223 TD-16 S 2233 TD-16 S 2323 16 S 2331 TD-16 S 2333 TD

X5:16 S 1920 TD-16 S 1921 TD-16 S 1925 TD-16 S 1930 TD-16 S 2220 TD-16 S 2221 TD-16 S 2225 TD 16 S 2230 TD-16 S 2231 TD-16 S 2235 TD-16 S 2320 TD-16 S 2320 TD-16 S 2325 TD-16 S 2330 TD

X6:16 S 2220 TO-16 S 2221 TO-16 S 2230 TO-16 S 2235 TO-16 S 2520 TO-16 S 2521 TO-16 S 2525 TO 16 S 2530 TO-16 S 2531 TO-16 S 2535 TO-16 S 2733 TO

NOTLAR :

X1,X2,X3,X4,X5,X6 ile kodlanan parçalar birlikte kullanılır

Alfabetik kodlamalar prizdireklere göre yapılmıştır.

X1:16 S 1930 TD-16 S 1931 TD-16 S 1935 TD-16 S 2230 TD-16 S 2231 TD-16 S 2235 TD

X2:16 S 2230 TO-16 S 2231 TO-16 S 2235 TO-16 S 2530 TO-16 S 2731 TO-16 S 2733 TO 16 S 2735 TO

X3:16 S 1930 TD-16 S 1931 TD-16 S 2030 TDL-16 S 2031 TDL-16 S 2230 TD-16 S 2231 TD 16 S 2235 TD-16 S 2320 TD-16 S 2321 TD-16 S 2325 TD-16 S 2330 TD-16 S 2335 TD

X4:16 S 1923 TD-16 S 1933 TD-16 S 2033 TDL-16 S 2223 TD-16 S 2233 TD-16 S 2323 16 S 2331 TD-16 S 2333 TD

X5:16 S 1920 TD-16 S 1921 TD-16 S 1925 TD-16 S 1930 TD-16 S 2220 TD-16 S 2221 TD-16 S 2225 TD 16 S 2230 TD-16 S 2231 TD-16 S 2235 TD-16 S 2320 TD-16 S 2320 TD-16 S 2325 TD-16 S 2330 TD

X6:16 S 2220 TO-16 S 2221 TO-16 S 2230 TO-16 S 2235 TO-16 S 2520 TO-16 S 2521 TO-16 S 2525 TO 16 S 2530 TO-16 S 2531 TO-16 S 2535 TO-16 S 2733 TO

Original parts names, oem numbers, symbols and descriptions used in this catalogue are for reference purposes only.

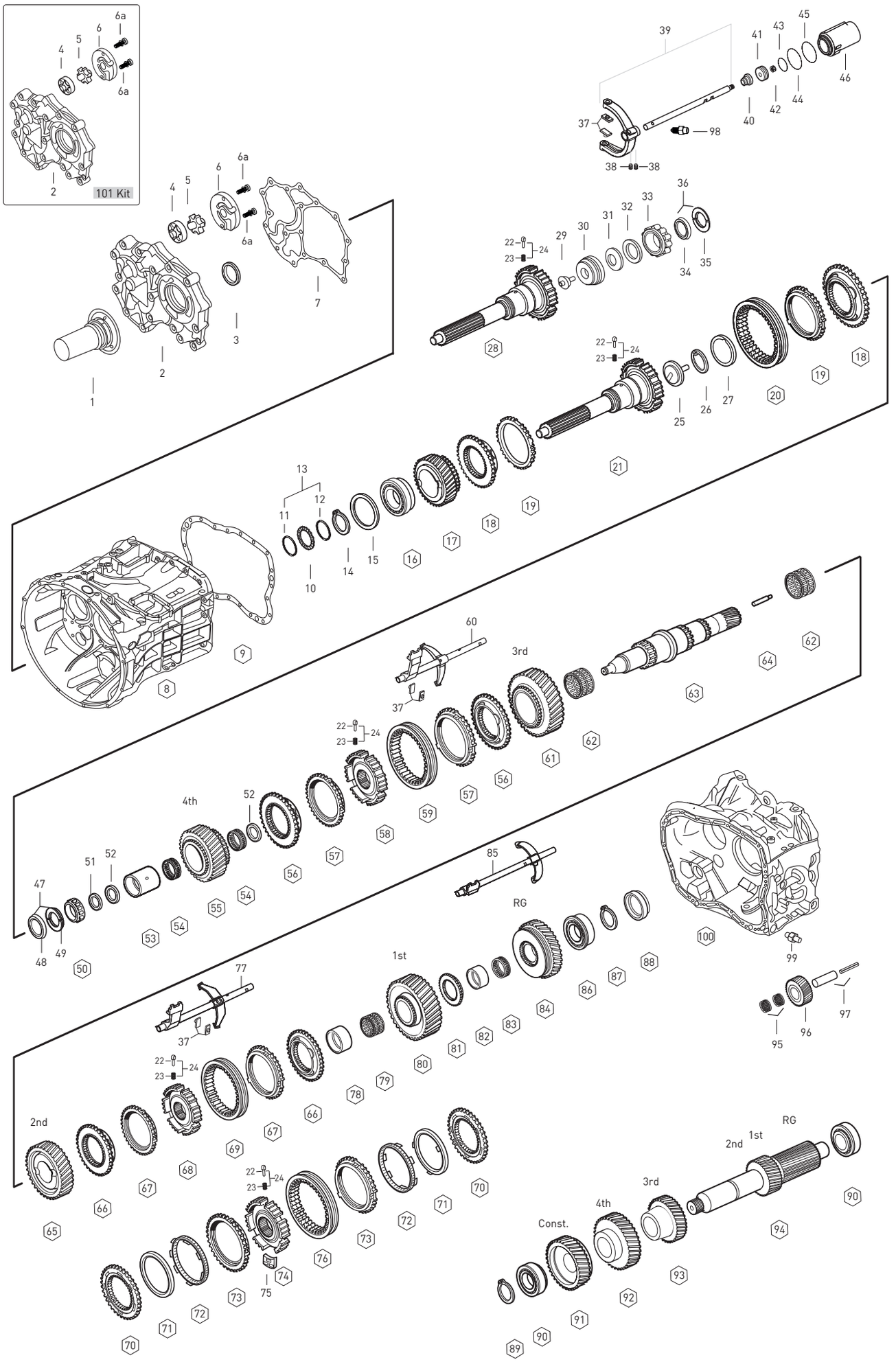

Original parts names, oem numbers, symbols and descriptions used in this catalogue are for reference purposes only.

Fig.	Kacmaz No.	Oem No	Oem Old No	Pcs.	Ürün Tanımı	Description	Sizes	Not	(X1).TD 16.41-1.00	(X2).TO 13.80-0.84	(X3).TD 16.41-1.00	(X4).TD 16.41-1.00	(X5).TD 16.41-1.00	(X6).TO 13.80-0.84
83	K20.01330	0750 115 326		1	GERİ VİTES MASURA BİLYA	NEEDLE CAGE			◆	◆	◆	◆	◆	◆
84	K20.00423	1316 304 235	(1316 304 012)	1	GERİ VİTES DİŞLİSİ 44 DİŞ	REVERSE GEAR 44 T			◆	◆	◆	◆	◆	◆
85		1356 206 001		1	GERİ VİTES HİLALİ	GEAR SHIFT FORK/RG			◆	◆	◆	◆	◆	◆
86	K20.01121	0750 117 678		1	KAMALI MİL ARKA BİLYA	ROLLER BEARING	80x140x36.50mm		◆	◆	◆	◆	◆	◆
87		0630 501 338		1	KAMALI MİL ARKA BİLYA SEG.	RETAINING RING	3.60mm		◆	◆	◆	◆	◆	◆
87	K20.02146	0630 501 316		1	KAMALI MİL ARKA BİLYA SEG.	RETAINING RING	3.50mm		◆	◆	◆	◆	◆	◆
87	K20.02147	0630 501 315		1	KAMALI MİL ARKA BİLYA SEG.	RETAINING RING	3.40mm		◆	◆	◆	◆	◆	◆
87	K20.02141	0630 501 314		1	KAMALI MİL ARKA BİLYA SEG.	RETAINING RING	3.30mm		◆	◆	◆	◆	◆	◆
87	K20.02148	0630 501 313		1	KAMALI MİL ARKA BİLYA SEG.	RETAINING RING	3.20mm		◆	◆	◆	◆	◆	◆
87		0630 501 312		1	KAMALI MİL ARKA BİLYA SEG.	RETAINING RING	3.10mm		◆	◆	◆	◆	◆	◆
88	K20.01593	1315 332 073		1	KAMALI MİL ARKA PUL	WASHER			◆	◆	◆	◆	◆	◆
89	K20.01960	0630 531 065		1	GRUP MİLİ ÖN BİLYA SEGMANI	RETAINING RING	3.00mm		◆	◆	◆	◆	◆	◆
89		0630 501 112		1	GRUP MİLİ ÖN BİLYA SEGMANI	RETAINING RING	2.90mm		◆	◆	◆	◆	◆	◆
89		0630 501 114		1	GRUP MİLİ ÖN BİLYA SEGMANI	RETAINING RING	2.80mm		◆	◆	◆	◆	◆	◆
89		0630 501 116		1	GRUP MİLİ Ö N BİLYA SEGMANI	RETAINING RING	2.70mm		◆	◆	◆	◆	◆	◆
89		0630 501 118		1	GRUP MİLİ ÖN BİLYA SEGMANI	RETAINING RING	2.60mm		◆	◆	◆	◆	◆	◆
89	K20.02200	0630 531 064		1	GRUP MİLİ ÖN BİLYA SEGMANI	RETAINING RING	2.50mm		◆	◆	◆	◆	◆	◆
90	K20.01126	0750 117 009	(0735 372 156)	2	GRUP MİLİ ÖN VE ARKA BİLYA	ROLLER BEARING	49.20x103.10x43.60mm		◆	◆	◆	◆	◆	◆
91	K20.00200	1316 303 030		1	TAKVİYE DİŞLİ KARŞ.39 DİŞ	CONSTANT GEAR 39T			◆		◆	◆	◆	
91	K20.00199	1316 303 071	(1316 303 064)	1	TAKVİYE DİŞLİ KARŞ.32 DİŞ	CONSTANT GEAR 32 T				◆				◆
92	K20.00203	1316 303 065		1	4.VİTES DİŞLİ KARŞ.35 DİŞ	GEAR 4th 35 T			◆	◆	◆	◆	◆	◆
93	K20.00206	1316 303 005		1	3.VİTES DİŞLİ KARŞ.26 DİŞ	GEAR 3rd 26 T			◆	◆	◆	◆	◆	◆
94	K20.00424	1316 303 033		1	GRUP MİLİ 17-20 DİŞ	COUNTER SHAFT 17-20 T			◆	◆	◆	◆	◆	◆
95	K20.01338	0750 115 369		2	KÜÇÜK GERİ VİT.MAS.BİLYA	NEEDLE CAGE	45x57x25mm		◆	◆	◆	◆	◆	◆
96	K20.00656	1316 305 001	(1316 305 008)	1	K.GERİ VİTES DİŞLİSİ 22 DİŞ	REV.IDLER GEAR 22 T			◆	◆	◆	◆	◆	◆
97	K20.00662	1316 201 030		1	KÜÇÜK GERİ VİTES PİMİ	PIN			◆	◆	◆	◆	◆	◆
98	K20.00819	1324 207 033	(1313 207 003)	1	İSTİNATLAMA FİŞEĞİ	DETENT PLUNGER	235 N		◆	◆	◆	◆	◆	◆
99	K20.00838	1324 207 035	(1313 207 005)	1	İSTİNATLAMA FİŞEĞİ	DETENT PLUNGER	145 N		◆	◆	◆	◆	◆	◆
			(1313 207 001)											
100		1325 201 031		1	ŞANZIMAN ORTA GÖVDE	HOUSING		(I)(F)					◆	◆
100		1325 201 033		1	ŞANZIMAN ORTA GÖVDE	HOUSING		(D)			◆	◆		
100		1325 201 034		1	ŞANZIMAN ORTA GÖVDE	HOUSING		(M)(R)	◆	◆				
101	K20.91074	1325 302 052		kit	PRİZ.KEÇE KAPAĞI KOMPLE	COVER COMP.		(I)(D)			◆	◆	◆	◆
101	K20.91070	1325 302 044		kit	PRİZ.KEÇE KAPAĞI KOMPLE	COVER COMP.		(R)	◆	◆				
101	K20.91075	1325 302 048		kit	PRİZ.KEÇE KAPAĞI KOMPLE	COVER COMP.		(R)(F)	◆	◆	◆	◆	◆	◆
101	K20.91076	1325 302 055		kit	PRİZ.KEÇE KAPAĞI KOMPLE	COVER COMP.		(M)	◆	◆	◆	◆	◆	◆

NOTES :

X1,X2,X3,X4,X5,X6 are used in conjunction with the encoded parts

Alphabetical Coding has been done according to Input Shaft

X1:16 S 1930 TD-16 S 1931 TD-16 S 1935 TD-16 S 2230 TD-16 S 2231 TD-16 S 2235 TD

X2:16 S 2230 TO-16 S 2231 TO-16 S 2235 TO-16 S 2530 TO-16 S 2731 TO-16 S 2733 TO 16 S 2735 TO

X3:16 S 1930 TD-16 S 1931 TD-16 S 2030 TDL-16 S 2031 TDL-16 S 2230 TD-16 S 2231 TD 16 S 2235 TD-16 S 2320 TD-16 S 2321 TD-16 S 2325 TD-16 S 2330 TD-16 S 2335 TD

X4:16 S 1923 TD-16 S 1933 TD-16 S 2033 TDL-16 S 2223 TD-16 S 2233 TD-16 S 2323 16 S 2331 TD-16 S 2333 TD

X5:16 S 1920 TD-16 S 1921 TD-16 S 1925 TD-16 S 1930 TD-16 S 2220 TD-16 S 2221 TD-16 S 2225 TD 16 S 2230 TD-16 S 2231 TD-16 S 2235 TD-16 S 2320 TD-16 S 2320 TD-16 S 2325 TD-16 S 2330 TD

X6:16 S 2220 TO-16 S 2221 TO-16 S 2230 TO-16 S 2235 TO-16 S 2520 TO-16 S 2521 TO-16 S 2525 TO 16 S 2530 TO-16 S 2531 TO-16 S 2535 TO-16 S 2733 TO

NOTLAR :

X1,X2,X3,X4,X5,X6 ile kodlanan parçalar birlikte kullanılır

Alfabetik kodlamalar prizdireklere göre yapılmıştır.

X1:16 S 1930 TD-16 S 1931 TD-16 S 1935 TD-16 S 2230 TD-16 S 2231 TD-16 S 2235 TD

X2:16 S 2230 TO-16 S 2231 TO-16 S 2235 TO-16 S 2530 TO-16 S 2731 TO-16 S 2733 TO 16 S 2735 TO

X3:16 S 1930 TD-16 S 1931 TD-16 S 2030 TDL-16 S 2031 TDL-16 S 2230 TD-16 S 2231 TD 16 S 2235 TD-16 S 2320 TD-16 S 2321 TD-16 S 2325 TD-16 S 2330 TD-16 S 2335 TD

X4:16 S 1923 TD-16 S 1933 TD-16 S 2033 TDL-16 S 2223 TD-16 S 2233 TD-16 S 2323 16 S 2331 TD-16 S 2333 TD

X5:16 S 1920 TD-16 S 1921 TD-16 S 1925 TD-16 S 1930 TD-16 S 2220 TD-16 S 2221 TD-16 S 2225 TD 16 S 2230 TD-16 S 2231 TD-16 S 2235 TD-16 S 2320 TD-16 S 2320 TD-16 S 2325 TD-16 S 2330 TD

X6:16 S 2220 TO-16 S 2221 TO-16 S 2230 TO-16 S 2235 TO-16 S 2520 TO-16 S 2521 TO-16 S 2525 TO 16 S 2530 TO-16 S 2531 TO-16 S 2535 TO-16 S 2733 TO

Original parts names, oem numbers, symbols and descriptions used in this catalogue are for reference purposes only.

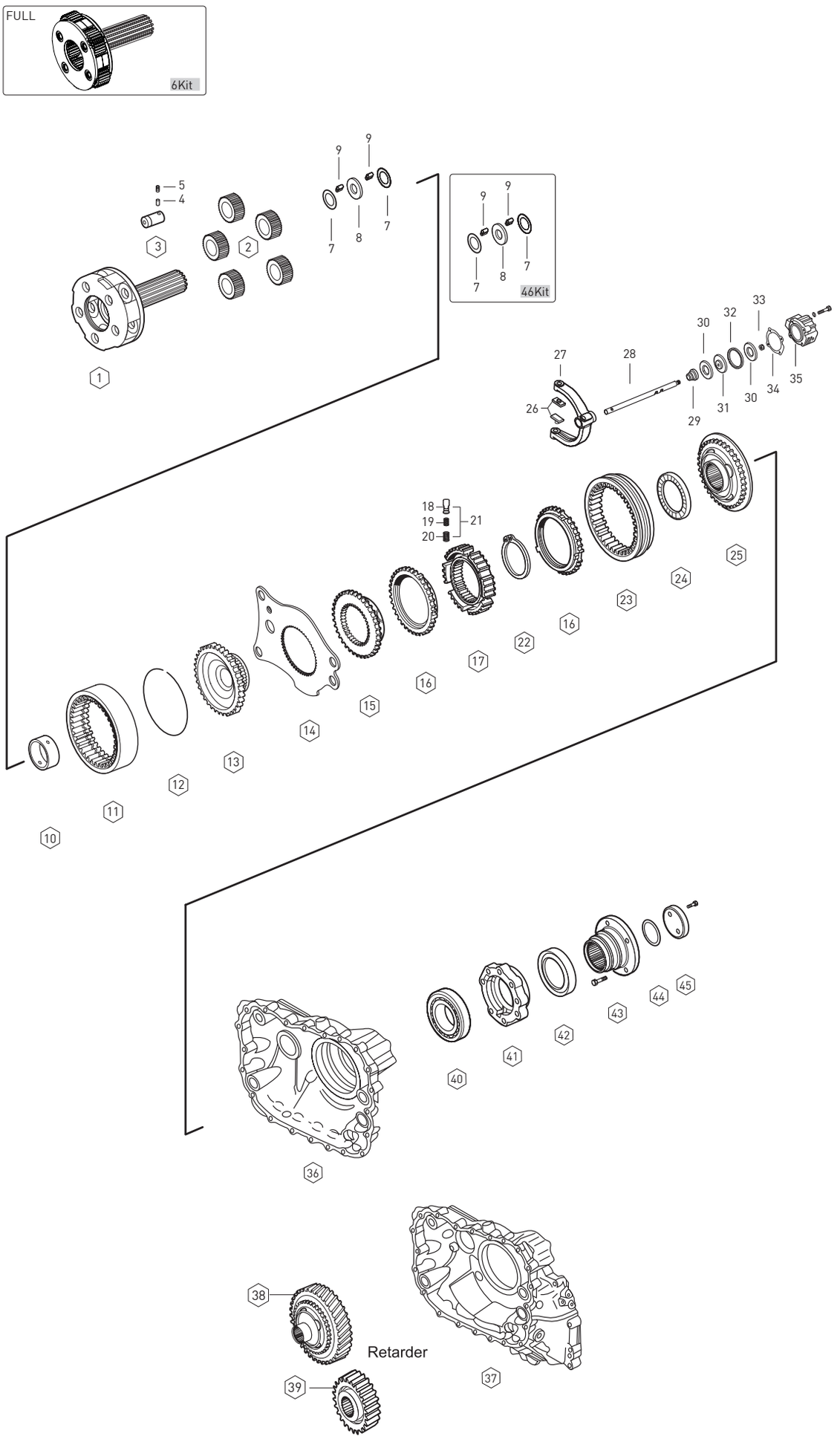

Original parts names, oem numbers, symbols and descriptions used in this catalogue are for reference purposes only.

Fig.	Kacmaz No.	Oem No	Oem Old No	Pcs.	Ürün Tanımı	Description	Sizes	(X1)
1	K20.00927	1316 232 039		1	ŞANZIMAN HEYKELİ (BOŞ)	PLANETARY CARRIER	EMPY	◆
2	K20.00192	1316 232 011		1	HEYKEL KOZA DİŞLİ TK. 28 DİŞ	PLANET.GEAR SET 28T		◆
3	K20.01770	1316 332 140		5	HEYKEL KOZA DİŞLİ PİMİ	PLANET SHAFT		◆
4		0631 329 147		5	HEYKEL KOZA DİŞLİ PİM KİLİT PİMİ	LOCK PIN	6.0X26.0mm	◆
5		0631 329 261		5	HEYKEL KOZA DİŞLİ PİM KİLİT PİMİ	LOCK PIN	3.5X26.0mm	◆
6	K20.01065	1316 232 039		1	ŞANZIMAN HEYKELİ (DOLU)	PLANETARY CARRIER	FULL	◆
7	K20.01515	0730 109 323		10	HEYKEL KOZA DİŞLİ PULU	THRUST WASHER	2.30mm	◆
8	K20.01516	0730 109 309		5	HEYKEL KOZA DİŞLİ PULU	THRUST WASHER	7.90mm	◆
9	K20.01454	0750 119 116		140	HEYKEL KOZA DİŞLİ TANE BİLYA	NEEDLE ROLLER	10X16.8mm	◆
10		1325 332 011		1	ŞANZIMAN HEYKEL BURCU	BUSHING		◆
11	K20.00646	1315 332 041		1	ÇEMBER DİŞLİ 82 DİŞ	RING WHEEL 82T		◆
12	K20.01690	0730 513 583		1	ÇEMBER DİŞLİ SEGMANI	SPRING RING	3.20mm	◆
13	K20.00647	1316 332 130	(1316 332 103)	1	PLANET ÇAN DİŞLİ	CARRIER HUB	H=91.00mm	◆
14	K20.00933	1325 333 016		1	PLEYT	PLATE		◆
15	K20.00074	1296 333 050		1	AĞIR SERİ SENKROMENÇ	ENGAGING RING		◆
16	K20.00038	1296 333 045	(1296 333 022)	2	AĞIR SERİ SENK.FRENLEME	SYNCHRONIZING CONE		◆
			(0769 174 091)					
17	K20.00185	1313 333 001		1	AĞIR SERİ YILDIZ DİŞLİ	GUIDE SLEEVE		◆
18	K20.00469	0732 040 385		9	AĞIR SERİ YILDIZ DİŞLİ YAYI	SPRING		◆
19	K20.00470	0732 040 386		9	AĞIR SERİ YILDIZ DİŞLİ YAYI	SPRING		◆
20	K20.00471	1240 304 278		9	AĞIR SERİ YILDIZ DİŞLİ FİŞEĞİ	PRESSURE PIECE		◆
21	K20.00474	1295 298 933		kit	A.SERİ YILDIZ DİŞLİ YAY FİŞEK TK.	REPAIR KIT		◆
22		0630 501 175		1	AĞIR SERİ YILDIZ DİŞLİ SEGMANI	RETAINING RING	125x3.70mm	◆
23	K20.00870	1325 333 018		1	AĞIR SERİ SENKROMENÇ HALKA	ENGAGING SLEEVE		◆
24	K20.01332	0735 298 169		1	SERİ SENK.ALIN MAS.BİLYA	NEEDLE BEARING	104.50X128.40X10mm	◆
25	K20.00891	1325 233 007		1	SERİ SENKROMENÇ	ENGAGING RING		◆
26	K20.00869	1325 334 008		2	AĞIR SERİ HİLAL PABUCU	SLIDING PAD		◆
27		1325 334 007		1	AĞIR SERİ HİLALİ	GEAR SHIFT FORK		◆
28		1325 334 017		1	AĞIR SERİ HİLAL MİLİ	GEAR SHIFT RAIL		◆
29	K20.01026	0750 112 253	(0750 112 131)	1	AĞIR SERİ HİLAL MİL KEÇESİ	FLANGE PACKING	25.0X40.0X15.0mm	◆
30	K20.01019	0734 307 294	(0734 307 280)	2	AĞIR SERİ HAVA KEÇESİ	SEALING RING		◆
31	K20.01773	1315 334 034		1	AĞIR SERİ HİLAL MİL PİSTONU	PISTON		◆
32	K20.01657	0750 112 066		1	AĞIR SERİ HİLAL MİL FİBERİ	GUIDE RING	85.1X90.0X5.4mm	◆
33	K20.01774	0737 300 037		1	AĞIR SERİ HİLAL MİL SOMUNU	NUT	M16X1.5mm	◆
34		0501 322 778		1	A.SERİ SİLİNDİR KAPAK CONTASI	GASKET		◆
35		1325 334 013		1	AĞIR SERİ SİLİNDİR GÖVDESİ	CYLINDER		◆
36		1325 301 065		1	ŞANZIMAN ARKA GÖVDE	HOUSING		◆
37		6093 201 008		1	ŞANZIMAN ARKA GÖVDE	HOUSING	RETARDER	◆
38	K20.00934	6093 204 010		1	RETARDER DİŞLİSİ	GEAR	RETARDER	◆
39	K20.00649	6085 301 012		1	RETARDER DİŞLİ KARŞILIĞI 29 DİŞ	GEAR 29 T	RETARDER	◆
40	K20.01134	0750 116 394	(0750 116 002)	1	ŞANZIMAN ARKA BİLYA	ROLLER BEARING	90X160X30mm	◆

NOTES :

X1 are used in conjunction with the encoded parts

X1:16 S 1930 TD-16 S 1931 TD-16 S 1935 TD-16 S 2230 TD-16 S 2231 TD-16 S 2235 TD

X1:16 S 2230 TO-16 S 2231 TO-16 S 2235 TO-16 S 2530 TO-16 S 2731 TO-16 S 2733 TO 16 S 2735 TO

X1:16 S 1930 TD-16 S 1931 TD-16 S 2030 TDL-16 S 2031 TDL-16 S 2230 TD-16 S 2231 TD 16 S 2235 TD-16 S 2320 TD-16 S 2321 TD-16 S 2325 TD-16 S 2330 TD-16 S 2335 TD

X1:16 S 1923 TD-16 S 1933 TD-16 S 2033 TDL-16 S 2223 TD-16 S 2233 TD-16 S 2323 16 S 2331 TD-16 S 2333 TD

X1:16 S 1920 TD-16 S 1921 TD-16 S 1925 TD-16 S 1930 TD-16 S 2220 TD-16 S 2221 TD-16 S 2225 TD 16 S 2230 TD-16 S 2231 TD-16 S 2235 TD-16 S 2320 TD-16 S 2320 TD-16 S 2325 TD-16 S 2330 TD

X1:16 S 2220 TO-16 S 2221 TO-16 S 2230 TO-16 S 2235 TO-16 S 2520 TO-16 S 2521 TO-16 S 2525 TO 16 S 2530 TO-16 S 2531 TO-16 S 2535 TO-16 S 2733 TO

NOTLAR :

X1 ile kodlanan parçalar birlikte kullanılır

X1:16 S 1930 TD-16 S 1931 TD-16 S 1935 TD-16 S 2230 TD-16 S 2231 TD-16 S 2235 TD

X1:16 S 2230 TO-16 S 2231 TO-16 S 2235 TO-16 S 2530 TO-16 S 2731 TO-16 S 2733 TO 16 S 2735 TO

X1:16 S 1930 TD-16 S 1931 TD-16 S 2030 TDL-16 S 2031 TDL-16 S 2230 TD-16 S 2231 TD 16 S 2235 TD-16 S 2320 TD-16 S 2321 TD-16 S 2325 TD-16 S 2330 TD-16 S 2335 TD

X1:16 S 1923 TD-16 S 1933 TD-16 S 2033 TDL-16 S 2223 TD-16 S 2233 TD-16 S 2323 16 S 2331 TD-16 S 2333 TD

X1:16 S 1920 TD-16 S 1921 TD-16 S 1925 TD-16 S 1930 TD-16 S 2220 TD-16 S 2221 TD-16 S 2225 TD 16 S 2230 TD-16 S 2231 TD-16 S 2235 TD-16 S 2320 TD-16 S 2320 TD-16 S 2325 TD-16 S 2330 TD

X1:16 S 2220 TO-16 S 2221 TO-16 S 2230 TO-16 S 2235 TO-16 S 2520 TO-16 S 2521 TO-16 S 2525 TO 16 S 2530 TO-16 S 2531 TO-16 S 2535 TO-16 S 2733 TO

Original parts names, oem numbers, symbols and descriptions used in this catalogue are for reference purposes only.

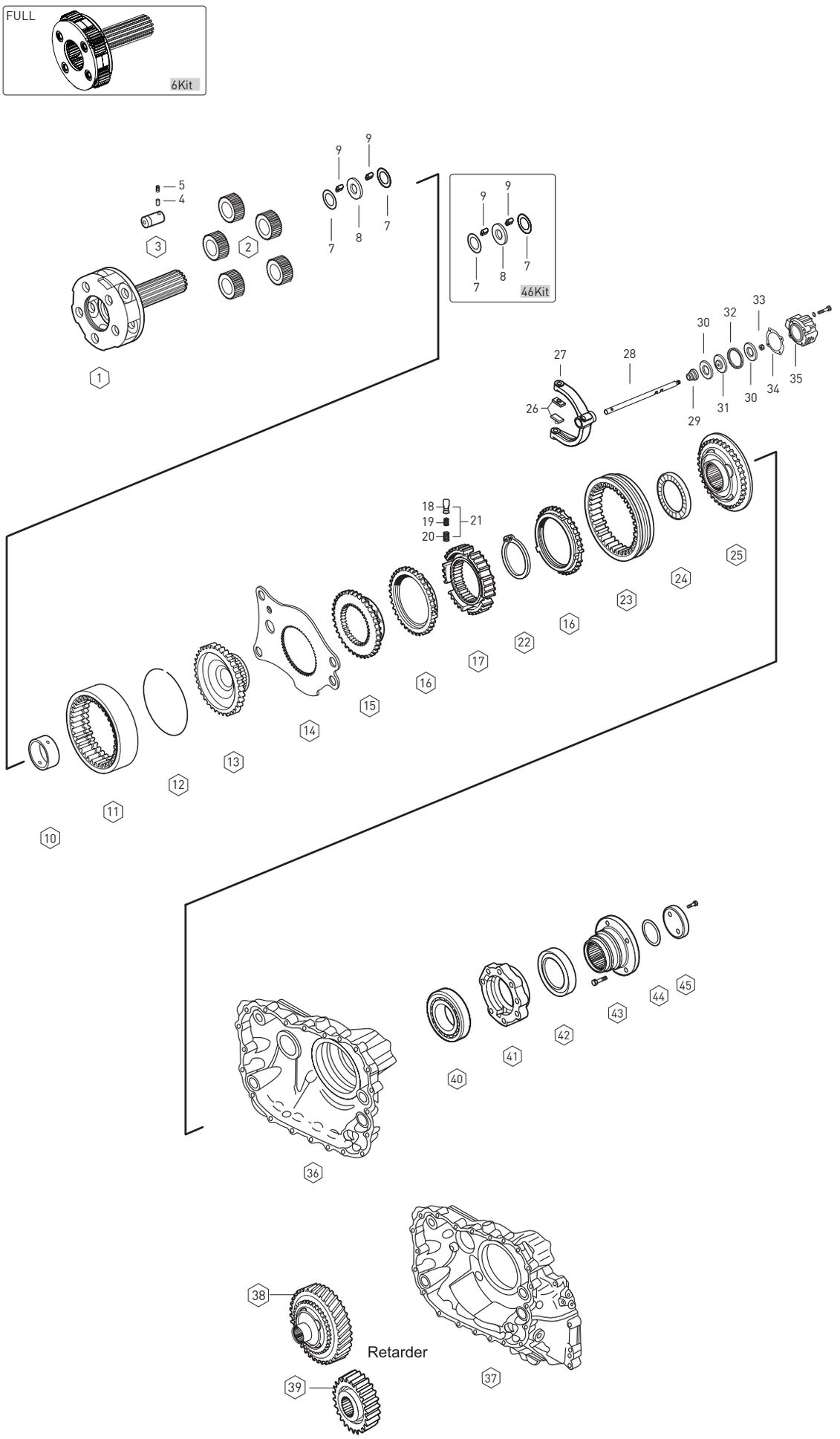

Original parts names, oem numbers, symbols and descriptions used in this catalogue are for reference purposes only.

Fig.	Kacmaz No.	Oem No	Oem Old No	Pcs.	Ürün Tanımı	Description	Sizes	Not	(X1)
40	K20.01134	0750 116 394	(0635 304 904)	1	ŞANZIMAN ARKA BİLYA	ROLLER BEARING	90X160X30mm		◆
41		1325 331 001		1	ŞANZIMAN ARKA KEÇE KAPAĞI	COVER			◆
42	K20.01022	0734 319 459	(0734 300 421)	1	ŞANZIMAN ARKA KEÇE	OIL SEAL	105X125X12mm		◆
43		1325 332 026		1	ŞANZIMAN FLANŞI	COMPANION FLANGE		R	◆
43		1325 332 036		1	ŞANZIMAN FLANŞI	COMPANION FLANGE		BF	◆
43		1325 332 012		1	ŞANZIMAN FLANŞI	COMPANION FLANGE		D	◆
43		1325 332 021		1	ŞANZIMAN FLANŞI	COMPANION FLANGE		I	◆
44	K20.02113	0634 313 805		1	ŞANZIMAN FLANŞ ORİNGİ	O-RING	82X4mm		◆
45	K20.01681	1312 332 028		1	ŞANZIMAN FLANŞ PULU	WASHER			◆
46	K20.00426	2000426		kit	ŞANZ.HEYKELİ BİLYA VE PUL TK.	REPAIR KIT			◆

NOTES :

X1 are used in conjunction with the encoded parts

X1:16 S 1930 TD-16 S 1931 TD-16 S 1935 TD-16 S 2230 TD-16 S 2231 TD-16 S 2235 TD

X1:16 S 2230 TO-16 S 2231 TO-16 S 2235 TO-16 S 2530 TO-16 S 2731 TO-16 S 2733 TO 16 S 2735 TO

X1:16 S 1930 TD-16 S 1931 TD-16 S 2030 TDL-16 S 2031 TDL-16 S 2230 TD-16 S 2231 TD 16 S 2235 TD-16 S 2320 TD-16 S 2321 TD-16 S 2325 TD-16 S 2330 TD-16 S 2335 TD

X1:16 S 1923 TD-16 S 1933 TD-16 S 2033 TDL-16 S 2223 TD-16 S 2233 TD-16 S 2323 16 S 2331 TD-16 S 2333 TD

X1:16 S 1920 TD-16 S 1921 TD-16 S 1925 TD-16 S 1930 TD-16 S 2220 TD-16 S 2221 TD-16 S 2225 TD 16 S 2230 TD-16 S 2231 TD-16 S 2235 TD-16 S 2320 TD-16 S 2320 TD-16 S 2325 TD-16 S 2330 TD

X1:16 S 2220 TO-16 S 2221 TO-16 S 2230 TO-16 S 2235 TO-16 S 2520 TO-16 S 2521 TO-16 S 2525 TO 16 S 2530 TO-16 S 2531 TO-16 S 2535 TO-16 S 2733 TO

NOTLAR :

X1 ile kodlanan parçalar birlikte kullanılır

X1:16 S 1930 TD-16 S 1931 TD-16 S 1935 TD-16 S 2230 TD-16 S 2231 TD-16 S 2235 TD

X1:16 S 2230 TO-16 S 2231 TO-16 S 2235 TO-16 S 2530 TO-16 S 2731 TO-16 S 2733 TO 16 S 2735 TO

X1:16 S 1930 TD-16 S 1931 TD-16 S 2030 TDL-16 S 2031 TDL-16 S 2230 TD-16 S 2231 TD 16 S 2235 TD-16 S 2320 TD-16 S 2321 TD-16 S 2325 TD-16 S 2330 TD-16 S 2335 TD

X1:16 S 1923 TD-16 S 1933 TD-16 S 2033 TDL-16 S 2223 TD-16 S 2233 TD-16 S 2323 16 S 2331 TD-16 S 2333 TD

X1:16 S 1920 TD-16 S 1921 TD-16 S 1925 TD-16 S 1930 TD-16 S 2220 TD-16 S 2221 TD-16 S 2225 TD 16 S 2230 TD-16 S 2231 TD-16 S 2235 TD-16 S 2320 TD-16 S 2320 TD-16 S 2325 TD-16 S 2330 TD

X1:16 S 2220 TO-16 S 2221 TO-16 S 2230 TO-16 S 2235 TO-16 S 2520 TO-16 S 2521 TO-16 S 2525 TO 16 S 2530 TO-16 S 2531 TO-16 S 2535 TO-16 S 2733 TO

Original parts names, oem numbers, symbols and descriptions used in this catalogue are for reference purposes only.

SYNCHRONIZER KIT 3rd/4th

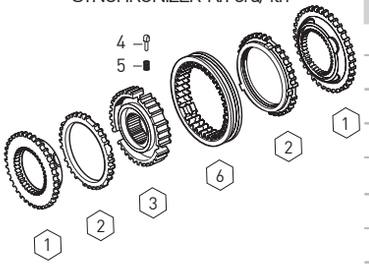

Fig.	Kacmaz No.	Oem No	Oem Old No	Pcs.	Ürün Tanımı	Description
	K20.01794	1356 204 006		kit	3./4.VİT.SENKROMENÇ KİT	SYNCH.KIT 3rd/4th
1	K20.00881	1316 304 190		2	3./4.VİT.SENKROMENÇ	ENGAGING RING
2	K20.00880	1316 304 189		2	3./4.VİT.SENK.FRENLEME	SYNCHRONIZING CONE
3	K20.00898	1356 304 019		1	3./4.VİT.YILDIZ DİŞLİ	GUIDE SLEEVE
4	K20.00111	1297 304 436		3	3./4.VİT.YILDIZ DİŞLİ FİŞEĞİ	PRESSURE PIECE
5	K20.00110	0732 040 409		3	3./4.VİT.YILDIZ DİŞLİ YAYI	SPRING
6	K20.00871	1356 304 023	(1316 304 188)	1	3./4.VİT.SENK.HALKA	ENGAGING SLEEVE

SYNCHRONIZER KIT 3rd-4th/Const.

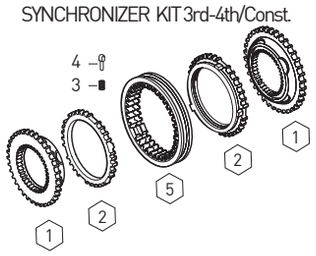

Fig.	Kacmaz No.	Oem No	Oem Old No	Pcs.	Ürün Tanımı	Description
	K20.00879	1325 298 008		kit	3.-4./TAK.VİT.SENK.KİT	SYNCH.KIT 3rd-4th/Const
1	K20.00881	1316 304 190		2	3./4.VİT.SENKROMENÇ	ENGAGING RING
2	K20.00880	1316 304 189		2	3./4.VİT.SENK.FRENLEME	SYNCHRONIZING CONE
3	K20.00111	1297 304 436		3	3./4.VİT.YILDIZ DİŞLİ FİŞEĞİ	PRESSURE PIECE
4	K20.00110	0732 040 409		3	3./4.VİT.YILDIZ DİŞLİ YAYI	SPRING
5	K20.00871	1356 304 023	(1316 304 188)	1	3./4.VİT.SENK.HALKA	ENGAGING SLEEVE

SYNCHRONIZER KIT 1st/2nd

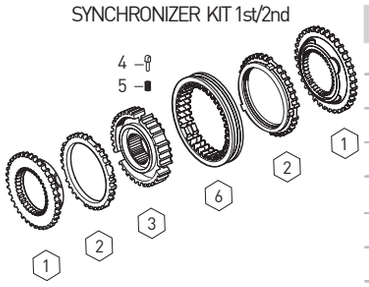

Fig.	Kacmaz No.	Oem No	Oem Old No	Pcs.	Ürün Tanımı	Description
	K20.01793	1356 204 007		kit	1./2.VİT.SENKROMENÇ KİT	SYNCH.KIT 1st/2nd
1	K20.00183	1316 304 156		2	1./2.VİT.SENKROMENÇ	ENGAGING RING
2	K20.00113	1316 304 170		2	1./2.VİT.SENK.FRENLEME	SYNCHRONIZING CONE
3	K20.00889	1356 304 022		1	1./2.VİT.YILDIZ DİŞLİ	GUIDE SLEEVE
4	K20.00111	1297 304 436		3	1./2.VİT.YILDIZ DİŞLİ FİŞEĞİ	PRESSURE PIECE
5	K20.00110	0732 040 409		3	1./2.VİT.YILDIZ DİŞLİ YAYI	SPRING
6	K20.00803	1356 304 024		1	1./2.VİT.SENK.HALKA	ENGAGING SLEEVE

SYNCHRONIZER KIT 1st/2nd

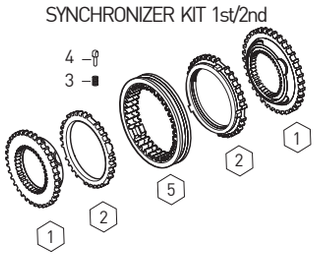

Fig.	Kacmaz No.	Oem No	Oem Old No	Pcs.	Ürün Tanımı	Description
	K20.00878	1325 298 007	(1316 298 036)	kit	1./2.VİT.SENKROMENÇ KİT	SYNCH.KIT 1st/2nd
1	K20.00183	1316 304 156		2	1./2.VİT.SENKROMENÇ	ENGAGING RING
2	K20.00113	1316 304 170		2	1./2.VİT.SENK.FRENLEME	SYNCHRONIZING CONE
3	K20.00111	1297 304 436		3	1./2.VİT.YILDIZ DİŞLİ FİŞEĞİ	PRESSURE PIECE
4	K20.00110	0732 040 409		3	1./2.VİT.YILDIZ DİŞLİ YAYI	SPRING
5	K20.00803	1356 304 024		1	1./2.VİT.SENK.HALKA	ENGAGING SLEEVE

SYNCHRONIZER KIT PLANETARY

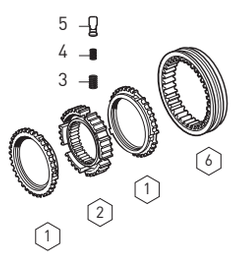

Fig.	Kacmaz No.	Oem No	Oem Old No	Pcs.	Ürün Tanımı	Description
	K20.00968	1325 233 008		kit	AĞIR SERİ SENK.KİT	SYNCHRONIZER KIT
1	K20.00038	1296 333 045	(1296 333 022)	2	AĞIR SERİ FRENLEME	SYNCHRONIZING CONE
2	K20.00185	1313 333 001		1	AĞIR SERİ YILDIZ DİŞLİ	GUIDE SLEEVE
3	K20.00469	0732 040 385		9	AĞIR SERİ YILDIZ DİŞLİ YAYI	SPRING
4	K20.00470	0732 040 386		9	AĞIR SERİ YILDIZ DİŞLİ YAYI	SPRING
5	K20.00471	1240 304 278		9	AĞIR SERİ YILDIZ DİŞ.FİŞEĞİ	PRESSURE PIECE
6	K20.00870	1325 333 018		1	AĞIR SERİ SENK.HALKA	ENGAGING SLEEVE

GEARBOX GASKET KIT

Fig.	Kacmaz No.	Oem No	Oem Old No	Pcs.	Ürün Tanımı	Description
	K20.01783	1325 298 009		Kit	ŞANZIMAN CONTA TAKIMI	GASKET KIT
1		0501 318 308		1	CONTA	GASKET
2	K20.02108	1238 308 201		1	CONTA	GASKET
3		1250 307 552		2	WASHER	GASKET
4		1315 307 242		1	CONTA	GASKET
5		1315 307 013		1	CONTA	GASKET
6		0501 322 776		1	CONTA	GASKET
7		0501 324 454		1	CONTA	GASKET
8		0501 323 705		1	CONTA	GASKET
9		0501 324 362		1	CONTA	GASKET
10		0501 322 778		1	CONTA	GASKET
11		0501 322 265		1	CONTA	GASKET

Original parts names, oem numbers, symbols and descriptions used in this catalogue are for reference purposes only.

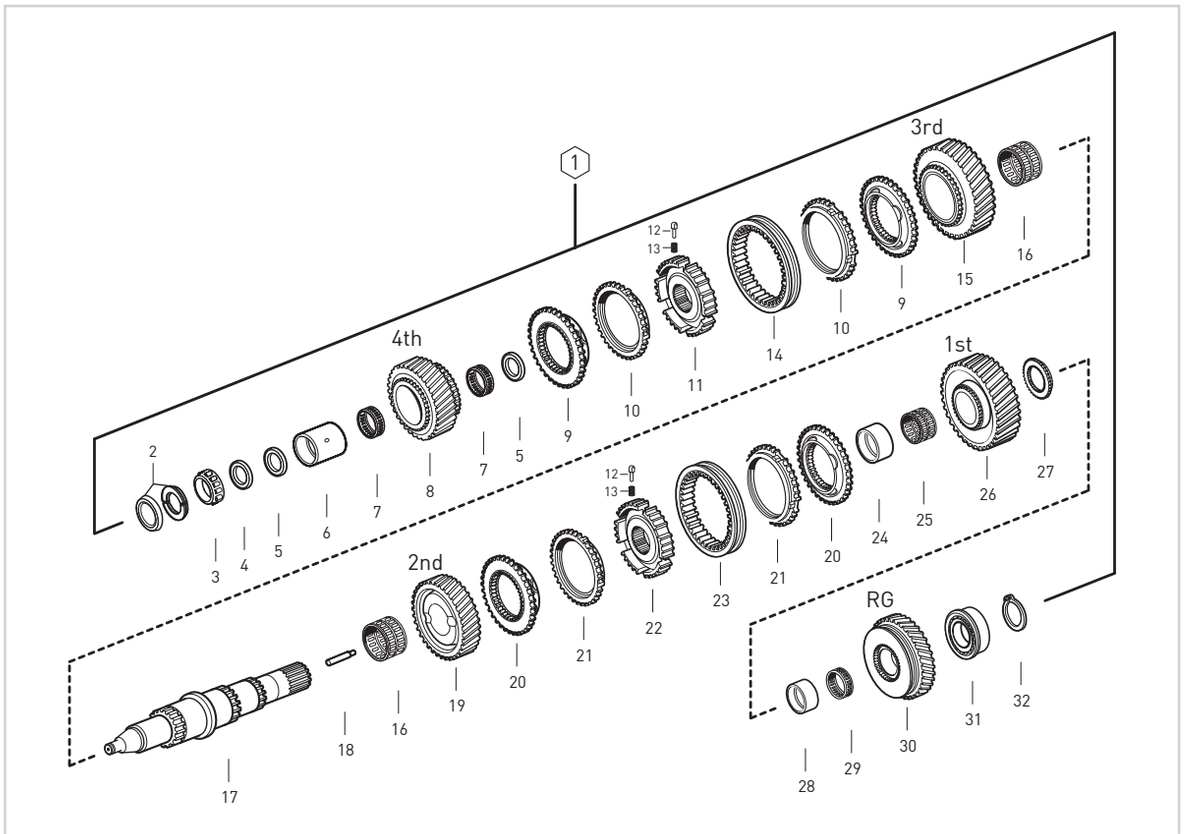

Fig.	Kacmaz No.	Oem No	Oem Old No	Pcs.	Ürün Tanımı	Description	Sizes
1	K20.00929	1356 104 016		kit	KAMALI MİL KOMPLE	MAIN SHAFT COMPLETE	
2	K20.01565	1499 298 025		1	EMN.SACI ve KİLİT TAK.	SPLIT RING KIT	4.80mm
3	K20.01109	0750 117 232	(0735 371 563)	1	KAMALI MİL UÇ BİLYA	ROLLER BEARING	
4	K20.01527	1315 304 048		1	KAMALI MİL UÇ BİLYA PULU	THRUST WASHER	8.00mm
5	K20.01533	0750 101 158		2	4.VİT.ÇANAK ALIN PULU	THRUST WASHER	
6	K20.00388	0750 119 124		1	4.VİT.MASURA BİLYA ÇANAĞI	BEARING RACE	
7	K20.01303	0750 115 531	(0750 115 534)	2	4.VİT.DİŞLİ MASURA BİLYA	NEEDLE CAGE	77X101X29mm
8	K20.00208	1316 304 103		1	4.VİTES DİŞLİSİ 32 DİŞ	GEAR 4th. 32 T	
9	K20.00881	1316 304 190		2	3./4.VİTES SENKROMENÇ	ENGAGING RING	
10	K20.00880	1316 304 189		2	3./ 4.VİT.SENK.FRENLEME	SYNCHRONIZING CONE	
11	K20.00898	1356 304 019		1	3./4.VİTES YILDIZ DİŞLİ	GUIDE SLEEVE	
12	K20.00111	1297 304 436		6	YILDIZ DİŞLİ FİŞEĞİ	PRESSURE PIECE	
13	K20.00110	0732 040 409		6	YILDIZ DİŞLİ YAYI	SPRING	
14	K20.00871	1356 304 023	(1316 304 188)	1	3./4.VİT.SENK.HALKA	ENGAGING SLEEVE	
15	K20.00211	1316 304 008		1	3.VİTES DİŞLİSİ 34 DİŞ	GEAR 3rd. 34 T	
16	K20.01326	0750 115 303	(0735 321 094)	2	2./3.VİTES MASURA BİLYA	NEEDLE CAGE	92x100x63mm
17	K20.00301	1316 304 132	(1316 304 079)	1	KAMALI MİL	MAIN SHAFT	
18	K20.01506	1324 304 014	(1312 304 150)	1	KAMALI MİL YAĞ BORUSU	OIL PIPE	
19	K20.00213	1316 304 002		1	2.VİTES DİŞLİSİ 38 DİŞ	GEAR 2nd 38 T	
20	K20.00183	1316 304 156		2	1./2.VİTES SENKROMENÇ	ENGAGING RING	
21	K20.00113	1316 304 170	(1316 304 150)	2	1./2.VİTES SENK.FRENLEME	SYCNHRONIZING CONE	
22	K20.00889	1356 304 022		1	1./2.VİTES YILDIZ DİŞLİ	GUIDE SLEEVE	
23	K20.00803	1356 304 024		1	1./2.VİTES SENK.HALKA	ENGAGING SLEEVE	
24	K20.00389	1312 304 084		1	1.VİT.MASURA BİLYA ÇANAĞI	BEARING RACE	
25	K20.01328	0750 115 327		1	1.VİTES MSURA BİLYA	NEEDLE CAGE	96X104X72mm
26	K20.00420	1316 304 010		1	1.VİTES DİŞLİSİ 47 DİŞ	GEAR 1st. 47 T	
27	K20.00421	1312 304 124		1	GERİ VİTES YILDIZ DİŞLİ	HUB	
28	K20.00422	1316 304 133	(1312 304 082)	1	GERİ VİT.MASURA BİLYA ÇANAĞI	BEARING RACE	
29	K20.01330	0750 115 326		1	GERİ VİTES MASURA BİLYA	NEEDLE CAGE	90X98X50mm
30	K20.00423	1316 304 012		1	GERİ VİTES DİŞLİSİ 44 DİŞ	REVERSE GEAR 44 T	
31	K20.01121	0750 117 678		1	KAMALI MİL ARKA BİLYA	ROLLER BEARING	80X140X36,5mm
32	K20.02146	0630 501 316		1	KAMALI MİL ARKA BİLYA SEGMANI	RETAINING RING	3.50mm

Original parts names, oem numbers, symbols and descriptions used in this catalogue are for reference purposes only.

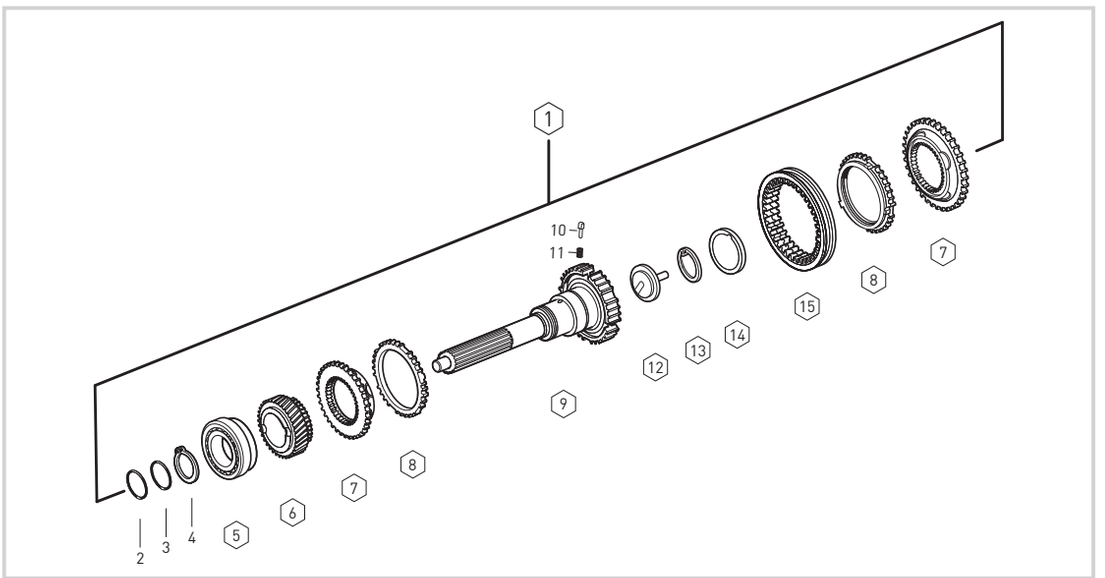

DG-TD

Fig.	Kacmaz No.	Oem No	Oem Old No	Pcs.	Ürün Tanımı	Description	Sizes
1	K20.01891	1356 102 005		Kit	PRİZDİREK KOMPLE	INPUT SHAFT COMPLETE	
2	K20.01530	0730 150 766		1	PRİZDİREK YAĞLAMA PULU	THRUST WASHER	
3	K20.01796	0730 300 745		1	PRİZDİREK YAĞLAMA PULU	THRUST WASHER	
4	K20.01897	0730 501 598		1	PRİZDİREK ÖN BİLYA SEGMANI	RETAINING RING	4.00 mm
5	K20.01104	0750 117 732		1	PRİZDİREK ÖN BİLYA	ROLLER BEARING	
6	K20.00196	1316 302 066		1	TAKVİYE DİŞLİSİ 30 DİŞ	CONSTANT GEAR 30 T	
7	K20.00881	1316 304 190		2	TAKVİYE KİLİT SENKROMENÇ	ENGAGING RING	
8	K20.00880	1316 304 189		2	TAKVİYE FRENLEME	SYNCHRONIZING CONE	
9	K20.00809	1356 302 101	(1316 302 219)	1	PRİZDİREK	INPUT SHAFT	
10	K20.00111	1297 304 436		3	PRİZDİREK FİŞEĞİ	PRESSURE PIECE	
11	K20.00110	0732 040 409		3	PRİZDİREK FİŞEK YAYI	SPRING	
12	K20.01504	1315 302 196		1	PRİZDİREK YAĞ PİPETİ	OIL PIPET	
13	K20.01505	0630 502 027		1	PRİZDİREK SEGMANI	RETAINING RING	
14	K20.01011	0501 314 060	(0750 101 179)	1	PRİZDİREK ARKA KEÇE	OIL SEAL	
15	K20.00871	1356 304 023	(1316 304 188)	1	TAKVİYE SENK.HALKA	ENGAGING SLEEVE	

SG-TO

Fig.	Kacmaz No.	Oem No	Oem Old No	Pcs.	Ürün Tanımı	Description	Sizes
1	K20.01892	1356 102 006		Kit	PRİZDİREK KOMPLE	INPUT SHAFT COMPLETE	
2	K20.01530	0730 150 766		1	PRİZDİREK YAĞLAMA PULU	THRUST WASHER	
3	K20.01796	0730 300 745		1	PRİZDİREK YAĞLAMA PULU	THRUST WASHER	
4	K20.01897	0730 501 598		1	PRİZDİREK ÖN BİLYA SEGMANI	RETAINING RING	4.00 mm
5	K20.01104	0750 117 732		1	PRİZDİREK ÖN BİLYA	ROLLER BEARING	
6	K20.00195	1316 302 067		1	TAKVİYE DİŞLİSİ 35 DİŞ	CONSTANT GEAR 35 T	
7	K20.00881	1316 304 190		2	TAKVİYE KİLİT SENKROMENÇ	ENGAGING RING	
8	K20.00880	1316 304 189		2	TAKVİYE FRENLEME	SYNCHRONIZING CONE	
9	K20.00809	1356 302 101	(1316 302 219)	1	PRİZDİREK	INPUT SHAFT	
10	K20.00111	1297 304 436		3	PRİZDİREK FİŞEĞİ	PRESSURE PIECE	
11	K20.00110	0732 040 409		3	PRİZDİREK FİŞEK YAYI	SPRING	
12	K20.01504	1315 302 196		1	PRİZDİREK YAĞ PİPETİ	OIL PIPET	
13	K20.01505	0630 502 027		1	PRİZDİREK SEGMANI	RETAINING RING	
14	K20.01011	0501 314 060	(0750 101 179)	1	PRİZDİREK ARKA KEÇE	OIL SEAL	
15	K20.00871	1356 304 023	(1316 304 188)	1	TAKVİYE SENK.HALKA	ENGAGING SLEEVE	

Original parts names, oem numbers, symbols and descriptions used in this catalogue are for reference purposes only.

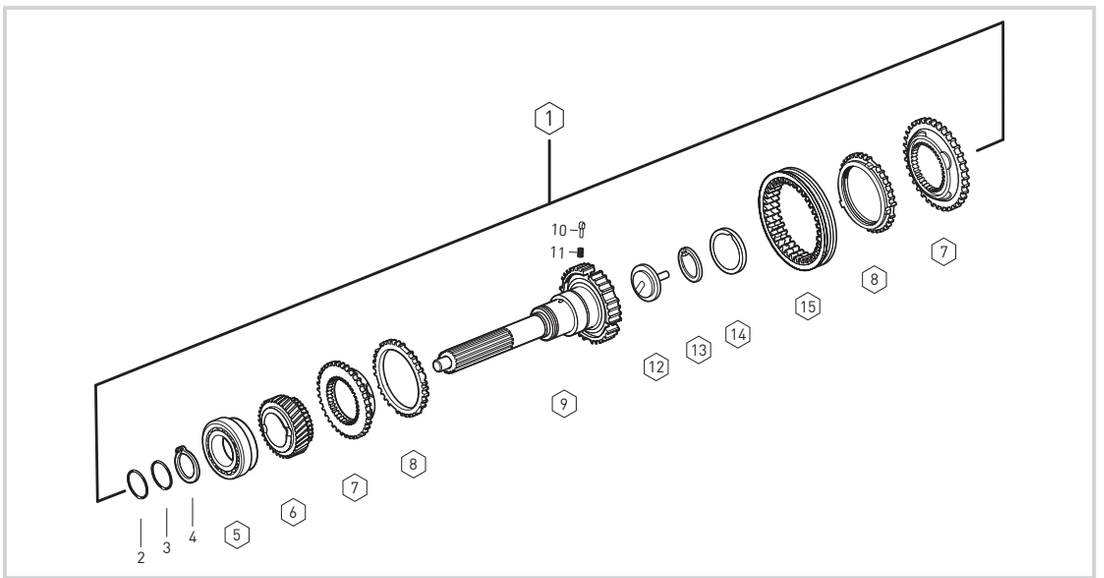

DG-TD

Fig.	Kacmaz No.	Oem No	Oem Old No	Pcs.	Ürün Tanımı	Description	Sizes
1	K20.01894	1356 102 008		Kit	PRİZDİREK KOMPLE	INPUT SHAFT COMPLETE	
2	K20.01530	0730 150 766		1	PRİZDİREK YAĞLAMA PULU	THRUST WASHER	
3	K20.01796	0730 300 745		1	PRİZDİREK YAĞLAMA PULU	THRUST WASHER	
4	K20.01897	0730 501 598		1	PRİZDİREK ÖN BİLYA SEGMANI	RETAINING RING	4.00 mm
5	K20.01104	0750 117 732		1	PRİZDİREK ÖN BİLYA	ROLLER BEARING	
6	K20.00196	1316 302 066		1	TAKVİYE DİŞLİSİ 30 DİŞ	CONSTANT GEAR 30 T	
7	K20.00881	1316 304 190		2	TAKVİYE KİLİT SENKROMENÇ	ENGAGING RING	
8	K20.00880	1316 304 189		2	TAKVİYE FRENLEME	SYNCHRONIZING CONE	
9	K20.01893	1356 302 103	(1316 302 221)	1	PRİZDİREK	INPUT SHAFT	
10	K20.00111	1297 304 436		3	PRİZDİREK FİŞEĞİ	PRESSURE PIECE	
11	K20.00110	0732 040 409		3	PRİZDİREK FİŞEK YAYI	SPRING	
12	K20.01504	1315 302 196		1	PRİZDİREK YAĞ PİPETİ	OIL PIPET	
13	K20.01505	0630 502 027		1	PRİZDİREK SEGMANI	RETAINING RING	
14	K20.01011	0501 314 060	(0750 101 179)	1	PRİZDİREK ARKA KEÇE	OIL SEAL	
15	K20.00871	1356 304 023	(1316 304 188)	1	TAKVİYE SENK.HALKA	ENGAGING SLEEVE	

SG-TO

Fig.	Kacmaz No.	Oem No	Oem Old No	Pcs.	Ürün Tanımı	Description	Sizes
1	K20.01895	1356 102 009		Kit	PRİZDİREK KOMPLE	INPUT SHAFT COMPLETE	
2	K20.01530	0730 150 766		1	PRİZDİREK YAĞLAMA PULU	THRUST WASHER	
3	K20.01796	0730 300 745		1	PRİZDİREK YAĞLAMA PULU	THRUST WASHER	
4	K20.01897	0730 501 598		1	PRİZDİREK ÖN BİLYA SEGMANI	RETAINING RING	4.00 mm
5	K20.01104	0750 117 732		1	PRİZDİREK ÖN BİLYA	ROLLER BEARING	
6	K20.00195	1316 302 067		1	TAKVİYE DİŞLİSİ 35 DİŞ	CONSTANT GEAR 35 T	
7	K20.00881	1316 304 190		2	TAKVİYE KİLİT SENKROMENÇ	ENGAGING RING	
8	K20.00880	1316 304 189		2	TAKVİYE FRENLEME	SYNCHRONIZING CONE	
9	K20.01893	1356 302 103	(1316 302 221)	1	PRİZDİREK	INPUT SHAFT	
10	K20.00111	1297 304 436		3	PRİZDİREK FİŞEĞİ	PRESSURE PIECE	
11	K20.00110	0732 040 409		3	PRİZDİREK FİŞEK YAYI	SPRING	
12	K20.01504	1315 302 196		1	PRİZDİREK YAĞ PİPETİ	OIL PIPET	
13	K20.01505	0630 502 027		1	PRİZDİREK SEGMANI	RETAINING RING	
14	K20.01011	0501 314 060	(0750 101 179)	1	PRİZDİREK ARKA KEÇE	OIL SEAL	
15	K20.00871	1356 304 023	(1316 304 188)	1	TAKVİYE SENK.HALKA	ENGAGING SLEEVE	

Original parts names, oem numbers, symbols and descriptions used in this catalogue are for reference purposes only.

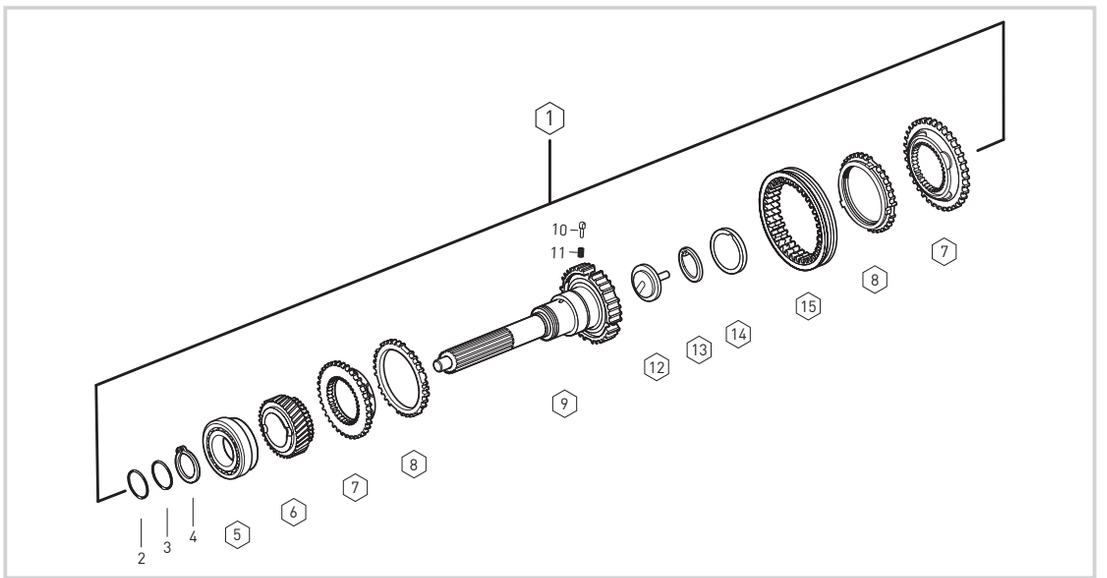

DG-TD

Fig.	Kacmaz No.	Oem No	Oem Old No	Pcs.	Ürün Tanımı	Description	Sizes
1	K20.01896	1356 102 004		Kit	PRİZDİREK KOMPLE	INPUT SHAFT COMPLETE	
2	K20.01530	0730 150 766		1	PRİZDİREK YAĞLAMA PULU	THRUST WASHER	
3	K20.01796	0730 300 745		1	PRİZDİREK YAĞLAMA PULU	THRUST WASHER	
4	K20.01897	0730 501 598		1	PRİZDİREK ÖN BİLYA SEGMANI	RETAINING RING	4.00 mm
5	K20.01104	0750 117 732		1	PRİZDİREK ÖN BİLYA	ROLLER BEARING	
6	K20.00196	1316 302 066		1	TAKVİYE DİŞLİSİ 30 DİŞ	CONSTANT GEAR 30 T	
7	K20.00881	1316 304 190		2	TAKVİYE KİLİT SENKROMENÇ	ENGAGING RING	
8	K20.00880	1316 304 189		2	TAKVİYE FRENLEME	SYNCHRONIZING CONE	
9	K20.00923	1356 302 100	(1316 302 226)	1	PRİZDİREK	INPUT SHAFT	
10	K20.00111	1297 304 436		3	PRİZDİREK FİŞEĞİ	PRESSURE PIECE	
11	K20.00110	0732 040 409		3	PRİZDİREK FİŞEK YAYI	SPRING	
12	K20.01504	1315 302 196		1	PRİZDİREK YAĞ PİPETİ	OIL PIPET	
13	K20.01505	0630 502 027		1	PRİZDİREK SEGMANI	RETAINING RING	
14	K20.01011	0501 314 060	(0750 101 179)	1	PRİZDİREK ARKA KEÇE	OIL SEAL	
15	K20.00871	1356 304 023	(1316 304 188)	1	TAKVİYE SENK.HALKA	ENGAGING SLEEVE	

SG-TO

Fig.	Kacmaz No.	Oem No	Oem Old No	Pcs.	Ürün Tanımı	Description	Sizes
1	K20.00984	2000984		Kit	PRİZDİREK KOMPLE	INPUT SHAFT COMPLETE	
2	K20.01530	0730 150 766		1	PRİZDİREK YAĞLAMA PULU	THRUST WASHER	
3	K20.01796	0730 300 745		1	PRİZDİREK YAĞLAMA PULU	THRUST WASHER	
4	K20.01897	0730 501 598		1	PRİZDİREK ÖN BİLYA SEGMANI	RETAINING RING	4.00 mm
5	K20.01104	0750 117 732		1	PRİZDİREK ÖN BİLYA	ROLLER BEARING	
6	K20.00195	1316 302 067	(1316 302 026)	1	TAKVİYE DİŞLİSİ 35 DİŞ	CONSTANT GEAR 35 T	
7	K20.00881	1316 304 190		2	TAKVİYE KİLİT SENKROMENÇ	ENGAGING RING	
8	K20.00880	1316 304 189		2	TAKVİYE FRENLEME	SYNCHRONIZING CONE	
9	K20.00923	1356 302 100	(1316 302 226)	1	PRİZDİREK	INPUT SHAFT	
10	K20.00111	1297 304 436		3	PRİZDİREK FİŞEĞİ	PRESSURE PIECE	
11	K20.00110	0732 040 409		3	PRİZDİREK FİŞEK YAYI	SPRING	
12	K20.01504	1315 302 196		1	PRİZDİREK YAĞ PİPETİ	OIL PIPET	
13	K20.01505	0630 502 027		1	PRİZDİREK SEGMANI	RETAINING RING	
14	K20.01011	0501 314 060	(0750 101 179)	1	PRİZDİREK ARKA KEÇE	OIL SEAL	
15	K20.00871	1356 304 023	(1316 304 188)	1	TAKVİYE SENK.HALKA	ENGAGING SLEEVE	

Original parts names, oem numbers, symbols and descriptions used in this catalogue are for reference purposes only.

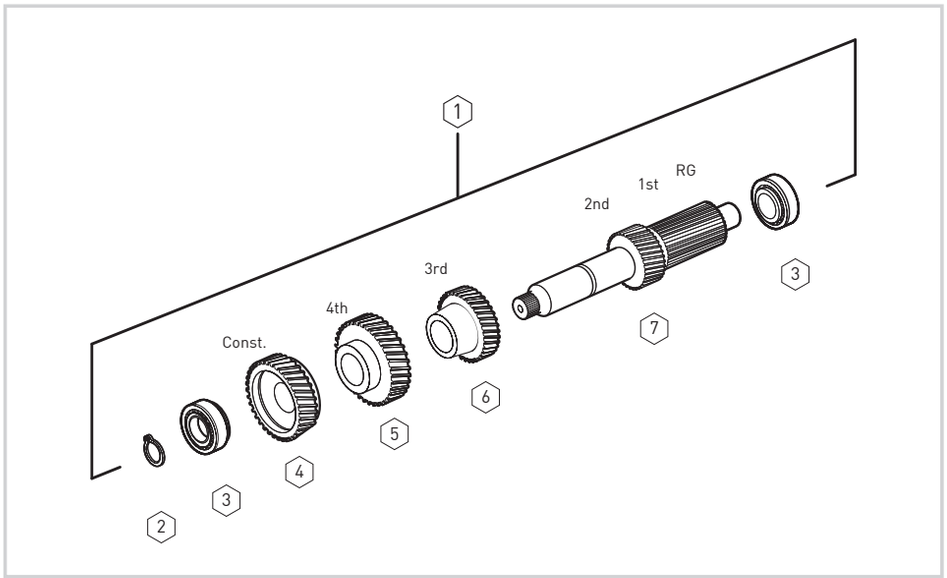

DG-TD

Fig.	Kacmaz No.	Oem No	Oem Old No	Pcs.	Ürün Tanımı	Description	Sizes
1	K20.00862	1316 103 012	(1356 103 003)	Kit	GRUP MİLİ KOMPLE	COUNTER SHAFT COMPLETE	
2	K20.02200	0630 531 064		1	GRUP MİLİ ÖN BİLYA SEGMANI	RETAINING RING	50X2.50mm
3	K20.01126	0750 117 009	(0735 372 156)	2	GRUP MİLİ ÖN VE ARKA BİLYA	ROLLER BEARING	49,2X103,1X43,6mm
4	K20.00200	1316 303 030		1	TAKVİYE DİŞLİ KARŞILIĞI 39 DİŞ	CONSTANT GEAR 39 T	
5	K20.00203	1316 303 065		1	4.VİT.DİŞLİ KARŞILIĞI 35 DİŞ	GEAR 4th 35 T	
6	K20.00206	1316 303 005		1	3.VİT.DİŞLİ KARŞILIĞI 26 DİŞ	GEAR 3rd 26 T	
7	K20.00424	1316 303 033		1	GRUP MİLİ 17-20 DİŞ	COUNTER SHAFT 17-20 T	

SG-TO

Fig.	Kacmaz No.	Oem No	Oem Old No	Pcs.	Ürün Tanımı	Description	Sizes
1	K20.00861	1316 103 013	(1356 103 002)	Kit	GRUP MİLİ KOMPLE	COUNTER SHAFT COMPLETE	
2	K20.02200	0630 531 064		1	GRUP MİLİ ÖN BİLYA SEGMANI	RETAINING RING	50X2.50mm
3	K20.01126	0750 117 009	(0735 372 156)	2	GRUP MİLİ ÖN VE ARKA BİLYA	ROLLER BEARING	49,2X103,1X43,6mm
4	K20.00199	1316 303 071	(1316 303 064)	1	TAKVİYE DİŞLİ KARŞILIĞI 32 DİŞ	CONSTANT GEAR 32 T	
5	K20.00203	1316 303 065		1	4.VİT.DİŞLİ KARŞILIĞI 35 DİŞ	GEAR 4th 35 T	
6	K20.00206	1316 303 005		1	3.VİT.DİŞLİ KARŞILIĞI 26 DİŞ	GEAR 3rd 26 T	
7	K20.00424	1316 303 033		1	GRUP MİLİ 17-20 DİŞ	COUNTER SHAFT 17-20 T	

Original parts names, oem numbers, symbols and descriptions used in this catalogue are for reference purposes only.

NOTES / NOTLAR

Original parts names, oem numbers, symbols and descriptions used in this catalogue are for reference purposes only.

12 AS TRONIC	
12 AS 1630 TD 12 AS 1930 TD 12 AS 1931 TD 12 AS 1935 TD 12 AS 2130 TD 12 AS 2301 TD 12 AS 2330 TD 12 AS 2335 TD	12 AS 1930 TO 12 AS 2130 TO 12 AS 2330 TO 12 AS 2530 TO

Original parts names, oem numbers, symbols and descriptions used in this catalogue are for reference purposes only.

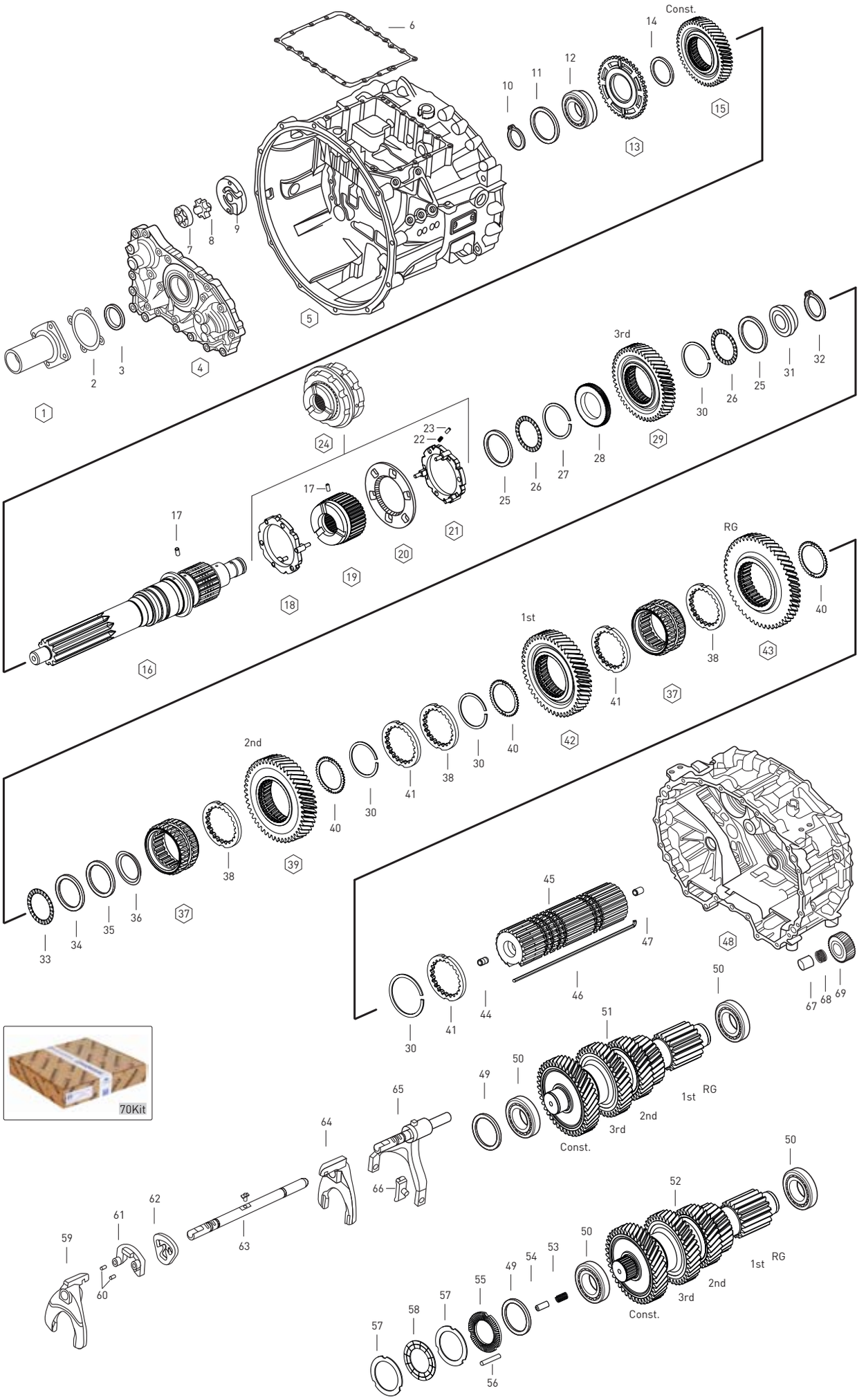

Original parts names, oem numbers, symbols and descriptions used in this catalogue are for reference purposes only.

Fig.	Kacmaz No.	Oem No	Oem Old No	Pcs.	Ürün Tanımı	Description	Sizes	(X1)	(X2)	(X3)
1		1328 302 202		1	PRİZ.KEÇE KAPAĞI	COVER		◆	◆	◆
2		0501 321 451		1	PRİZ.KEÇE KAPAK CONTASI	GASKET		◆	◆	◆
3		0734 319 847		1	PRİZDİREK KEÇESİ	OIL SEAL	55.0X70.0X8.0mm	◆	◆	◆
4		1328 302 096		1	ÖN KAPAK	FRONT COVER		◆	◆	◆
5		0769 171 964		1	ŞANZIMAN ÖN GÖVDE	HOUSING		◆	◆	◆
6	K20.02144	0501 316 322		1	ŞANZIMAN ÖN GÖVDE CONTASI	GASKET		◆	◆	◆
7	K20.00543	1315 303 027		1	YAĞ POMPA DIŞ ROTOR	ROTOR		◆	◆	◆
8	K20.00542	1314 202 039		1	YAĞ POMPA İÇ ROTOR	OIL PUMP GEAR		◆	◆	◆
9		1328 302 203		1	YAĞ POMPA KAPAĞI	PUMP COVER		◆	◆	◆
10	K20.02186	0730 501 590		1	PRİZDİREK ÖN BİLYA SEGMANI	RETAINING RING	3.30mm	◆	◆	◆
10	K20.02187	0730 501 592		1	PRİZDİREK ÖN BİLYA SEGMANI	RETAINING RING	3.40mm	◆	◆	◆
10	K20.02188	0730 501 594		1	PRİZDİREK ÖN BİLYA SEGMANI	RETAINING RING	3.50mm	◆	◆	◆
10	K20.02189	0730 501 596		1	PRİZDİREK ÖN BİLYA SEGMANI	RETAINING RING	3.60mm	◆	◆	◆
10	K20.02190	0730 501 356		1	PRİZDİREK ÖN BİLYA SEGMANI	RETAINING RING	3.80mm	◆	◆	◆
10	K20.02191	0730 501 358		1	PRİZDİREK ÖN BİLYA SEGMANI	RETAINING RING	3.90mm	◆	◆	◆
10	K20.02192	0730 501 360		1	PRİZDİREK ÖN BİLYA SEGMANI	RETAINING RING	4.00mm	◆	◆	◆
11		0730 008 520		1	PRİZDİREK ÖN BİLYA RAYNELİ	SHIM	1.40mm	◆	◆	◆
11		0730 008 522		1	PRİZDİREK ÖN BİLYA RAYNELİ	SHIM	1.50mm	◆	◆	◆
11		0730 008 524		1	PRİZDİREK ÖN BİLYA RAYNELİ	SHIM	1.60mm	◆	◆	◆
11		0730 008 526		1	PRİZDİREK ÖN BİLYA RAYNELİ	SHIM	1.70mm	◆	◆	◆
11		0730 008 528		1	PRİZDİREK ÖN BİLYA RAYNELİ	SHIM	1.80mm	◆	◆	◆
11		0730 008 530		1	PRİZDİREK ÖN BİLYA RAYNELİ	SHIM	1.90mm	◆	◆	◆
11		0730 008 532		1	PRİZDİREK ÖN BİLYA RAYNELİ	SHIM	2.00mm	◆	◆	◆
12		0750 116 365		1	PRİZDİREK ÖN BİLYA	ROLLER BEARING	65.0X120.0X23.0mm	◆	◆	◆
13		1328 302 024		1	DEVİR OKUYUCU	DISK		◆	◆	◆
14		0730 110 392		1	TAKVİYE DİŞLİSİ İÇ PULU	WASHER	6.00mm	◆	◆	◆
15	K20.01835	1327 302 005		1	TAKVİYE DİŞLİSİ 36 DİŞ	CONSTANT GEAR 36 T		◆		
15	K20.01837	1327 302 015	(1327 302 006)	1	TAKVİYE DİŞLİSİ 46 DİŞ	CONSTANT GEAR 46 T			◆	◆
16	K20.00922	1328 302 077		1	PRİZDİREK	INPUT SHAFT		◆	◆	
16	K20.00882	1328 302 078		1	PRİZDİREK	INPUT SHAFT		◆	◆	◆
16	K20.01952	1328 302 080		1	PRİZDİREK	INPUT SHAFT			◆	
17		1328 302 072		2	PRİZDİREK PİMİ	PIN		◆	◆	◆
18	K20.01839	1328 202 046		1	TAKVİYE FRENLEME	SYNCHRONIZER CONE		◆	◆	◆
19	K20.01844	1328 302 064		1	TAKVİYE SENKROMENÇ	SYNCHRONIZER RING		◆	◆	◆
20	K20.01843	1328 302 132		1	TAKVİYE FRENLEME PLEYT	ROTATE PLATE		◆	◆	◆
21	K20.01842	1328 202 047		1	TAKVİYE FRENLEME	SYNCHRONIZER CONE		◆		
21	K20.01841	1328 202 048		1	TAKVİYE FRENLEME	SYNCHRONIZER CONE			◆	◆
22	K20.00469	0732 040 385		3	PRİZDİREK YAYI	SPRING	0.70mm	◆	◆	◆
23		0635 470 046		3	PRİZDİREK PİMİ	PIN		◆	◆	◆
24	K20.01840	1328 298 002		kit	TAKVİYE FRENLEME KİTİ	SYNCHRONIZING CONE KIT		◆		
24	K20.01786	1328 202 049	(1328 298 001)	kit	TAKVİYE FRENLEME KİTİ	SYNCHRONIZING CONE KIT			◆	◆

NOTES :

X1,X2,X3 are used in conjunction with the encoded parts.

(X1) : 12 AS 1630 TD, 12 AS 1930 TD, 12 AS 1931 TD, 12 AS 1935 TD
12 AS 2130 TD, 12 AS 2301 TD, 12 AS 2330 TD, 12 AS 2335 TD

(X2) : 12 AS 1930 TO, 12 AS 2130 TO, 12 AS 2330 TO, 12 AS 2530 TO

(X3) : 12 AS 2331 TO

NOTLAR :

X1,X2,X3 ile kodlanan parçalar birlikte kullanılır.

(X1) : 12 AS 1630 TD, 12 AS 1930 TD, 12 AS 1931 TD, 12 AS 1935 TD
12 AS 2130 TD, 12 AS 2301 TD, 12 AS 2330 TD, 12 AS 2335 TD

(X2) : 12 AS 1930 TO, 12 AS 2130 TO, 12 AS 2330 TO, 12 AS 2530 TO

(X3) : 12 AS 2331 TO

Original parts names, oem numbers, symbols and descriptions used in this catalogue are for reference purposes only.

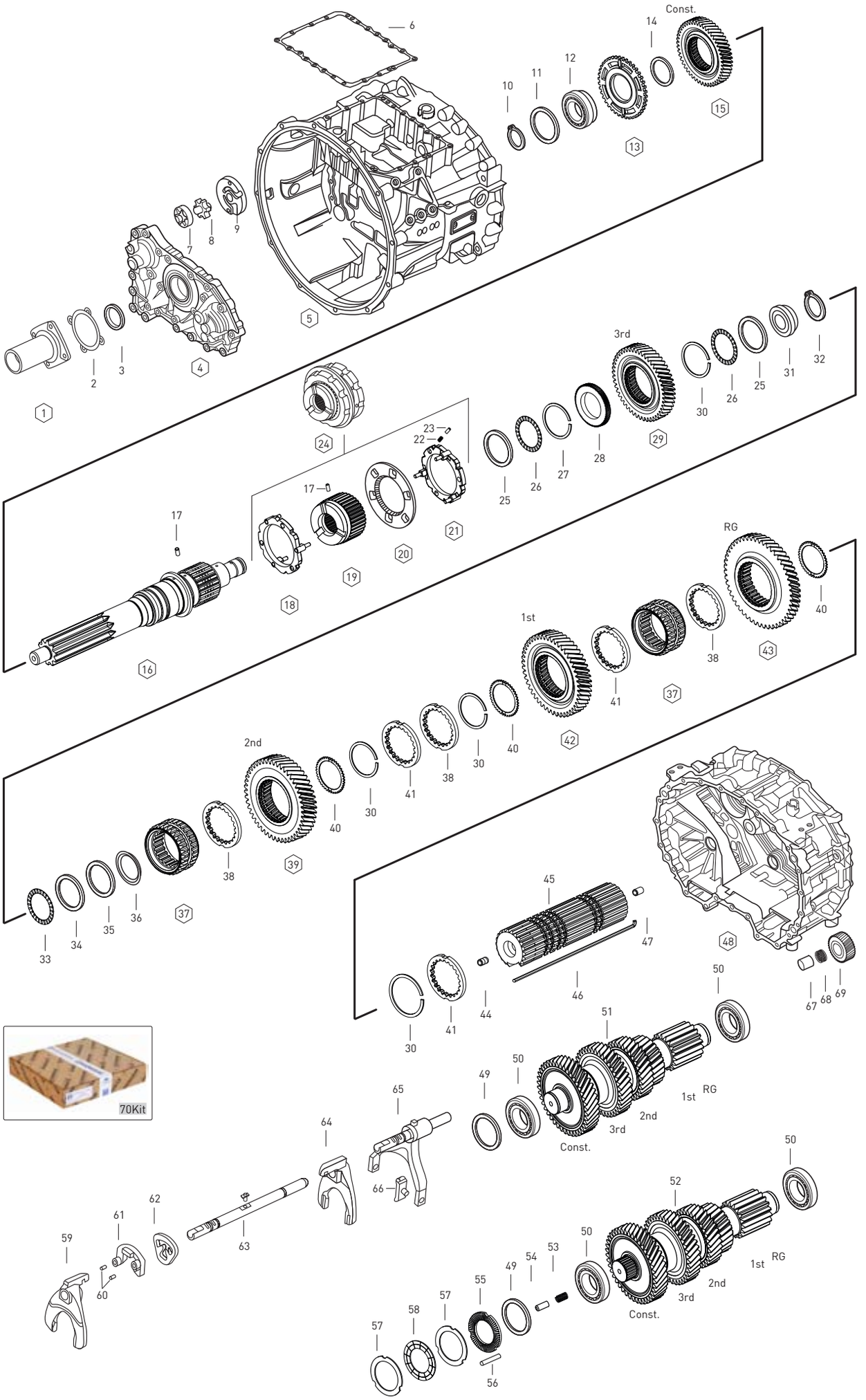

Original parts names, oem numbers, symbols and descriptions used in this catalogue are for reference purposes only.

Fig.	Kacmaz No.	Oem No	Oem Old No	Pcs.	Ürün Tanımı	Description	Sizes	(X1)	(X2)	(X3)
25	K20.02194	0730 111 066		2	İĞNE RULMAN ALIN PULU	THRUST WASHER		◆	◆	◆
26	K20.01474	0735 301 274	(0735 321 487)	2	3.VİTES İĞNE RULMANI	AXIAL NEEDLE		◆	◆	◆
27		0730 513 973		1	3.VİTES DİŞLİ SEGMANI	ELASTIC RING	2.50mm	◆	◆	◆
28	K20.02168	1328 302 061		1	3.VİTES DİŞLİ PULU	FOLLOWER RING		◆	◆	
29	K20.01834	1327 304 015		1	3.VİTES DİŞLİSİ 40 DİŞ	GEAR 3rd 40 T				◆
29		1327 304 031		1	3.VİTES DİŞLİSİ	GEAR 3rd		◆	◆	◆
30		0730 514 006		5	4.VİTES DİŞLİ SEGMANI	ELASTIC RING	2.55mm	◆	◆	◆
30		0730 514 007		5	4.VİTES DİŞLİ SEGMANI	ELASTIC RING	2.60mm	◆	◆	◆
30		0730 514 008		5	4.VİTES DİŞLİ SEGMANI	ELASTIC RING	2.65mm	◆	◆	◆
30		0730 514 009		5	4.VİTES DİŞLİ SEGMANI	ELASTIC RING	2.70mm	◆	◆	◆
30		0730 514 010		5	4.VİTES DİŞLİ SEGMANI	ELASTIC RING	2.75mm	◆	◆	◆
30		0730 514 011		5	4.VİTES DİŞLİ SEGMANI	ELASTIC RING	2.80mm	◆	◆	◆
31		1328 302 075		1	PRİZDİREK AYAR PULU	THRUST RING		◆	◆	◆
32		0730 513 641		1	PRİZDİREK KİLİT SEGMANI	RETAINER RING	2.00mm	◆	◆	◆
33	K20.01473	0735 301 881	(0735 321 381)	1	PRİZDİREK İĞNE RULMAN	AXIAL NEEDLE	30.0X52.0X7.5mm	◆	◆	◆
34	K20.02193	0730 109 641		1	PRİZDİREK ALIN PULU	THRUST WASHER	5.00mm	◆	◆	◆
35		1328 202 038		1	PARÇALI KİLİT	SPLIT RING		◆	◆	◆
36		0730 063 258		1	KİLİTLEME SACI	LOCK RING	5.90mm	◆	◆	◆
37	K20.01845	1328 304 064	(1328 304 043)	2	SENKROMENÇ HALKA	SLIDING SLEEVE		◆	◆	◆
38	K20.01846	1314 304 008		3	İÇİ FREZELİ PUL	WASHER	7.00mm	◆	◆	◆
38	K20.02195	1327 304 033		3	İÇİ FREZELİ PUL	WASHER	7.05mm	◆	◆	◆
38	K20.02196	1327 304 034		3	İÇİ FREZELİ PUL	WASHER	7.10mm	◆	◆	◆
38	K20.02197	1327 304 035		3	İÇİ FREZELİ PUL	WASHER	7.15mm	◆	◆	◆
38	K20.02198	1327 304 036		3	İÇİ FREZELİ PUL	WASHER	7.20mm	◆	◆	◆
39	K20.01833	1327 304 002		1	2.VİTES DİŞLİSİ 48 DİŞ	GEAR 2nd 48 T		◆	◆	
39	K20.01836	1327 304 024		1	2.VİTES DİŞLİSİ 48 DİŞ	GEAR 2nd 48 T		◆	◆	
39		1327 304 037		1	2.VİTES DİŞLİSİ	GEAR 2nd				◆
40	K20.01847	1314 304 119		3	DIŞI FREZELİ PUL	WASHER		◆	◆	◆
41	K20.01846	1314 304 008		3	İÇİ FREZELİ PUL	WASHER	7.00mm	◆	◆	◆
42	K20.01832	1328 304 060		1	1.VİTES DİŞLİSİ 54 DİŞ	GEAR 1st 54 T		◆	◆	◆
43	K20.01831	1328 304 067	(1328 304 061)	1	GERİ VİTES DİŞLİSİ 50 DİŞ	REVERSE GEAR 50 T		◆	◆	◆
44		1314 304 097		1	KAMALI MİL YAĞ BORUSU	OIL TUBE		◆	◆	◆
45	K20.01838	1327 304 032		1	KAMALI MİL	MAIN SHAFT		◆	◆	◆
46		1328 304 035		1	KİLİTLEME MİLİ	KEY SHAFT		◆	◆	◆
47		1314 332 043		1	KAMALI MİL YAĞ BORUSU	OIL TUBE		◆	◆	◆
48		1327 301 049	(1327 304 050)	1	ŞANZIMAN ORTA GÖVDE	HOUSING		◆	◆	◆
49		0730 008 051		1	GRUP MİLİ ÖN BİLYA RAYNELİ	SHIM	1.70mm	◆	◆	◆
49		0730 008 052		1	GRUP MİLİ ÖN BİLYA RAYNELİ	SHIM	1.80mm	◆	◆	◆
49		0730 008 053		1	GRUP MİLİ ÖN BİLYA RAYNELİ	SHIM	1.90mm	◆	◆	◆
49		0730 007 784		1	GRUP MİLİ ÖN BİLYA RAYNELİ	SHIM	2.10mm	◆	◆	◆
49		0730 007 786		1	GRUP MİLİ ÖN BİLYA RAYNELİ	SHIM	2.20mm	◆	◆	◆

NOTES :

X1,X2,X3 are used in conjunction with the encoded parts.

(X1) : 12 AS 1630 TD, 12 AS 1930 TD, 12 AS 1931 TD, 12 AS 1935 TD
12 AS 2130 TD, 12 AS 2301 TD, 12 AS 2330 TD, 12 AS 2335 TD

(X2) : 12 AS 1930 TO, 12 AS 2130 TO, 12 AS 2330 TO, 12 AS 2530 TO

(X3) : 12 AS 2331 TO

NOTLAR :

X1,X2,X3 ile kodlanan parçalar birlikte kullanılır.

(X1) : 12 AS 1630 TD, 12 AS 1930 TD, 12 AS 1931 TD, 12 AS 1935 TD
12 AS 2130 TD, 12 AS 2301 TD, 12 AS 2330 TD, 12 AS 2335 TD

(X2) : 12 AS 1930 TO, 12 AS 2130 TO, 12 AS 2330 TO, 12 AS 2530 TO

(X3) : 12 AS 2331 TO

Original parts names, oem numbers, symbols and descriptions used in this catalogue are for reference purposes only.

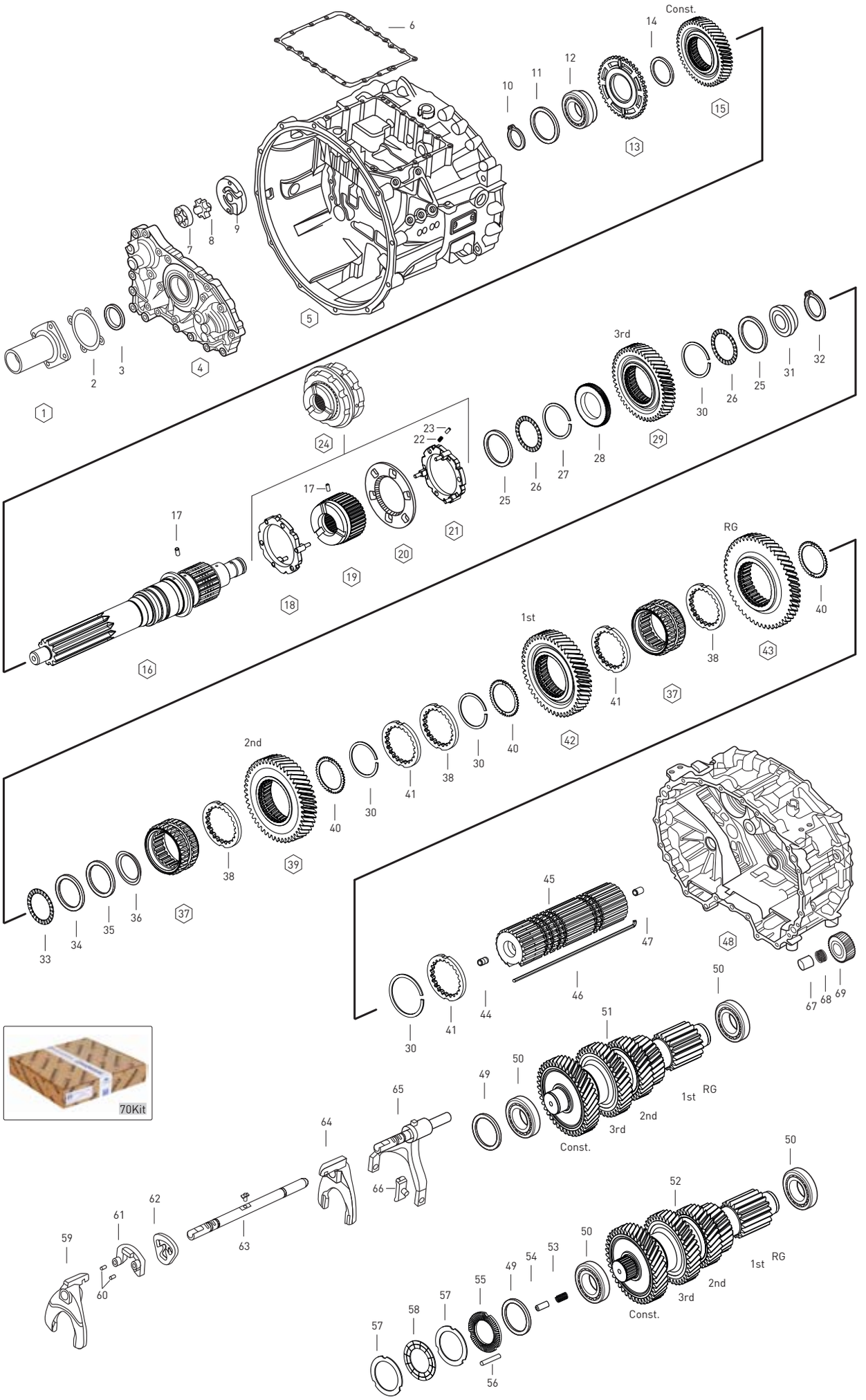

Original parts names, oem numbers, symbols and descriptions used in this catalogue are for reference purposes only.

Fig.	Kacmaz No.	Oem No	Oem Old No	Pcs.	Ürün Tanımı	Description	Sizes	(X1)	(X2)	(X3)
49		0730 008 292		1	GRUP MİLİ ÖN BİLYA RAYNELİ	SHIM	2.30mm	◆	◆	◆
49		0730 008 294		1	GRUP MİLİ ÖN BİLYA RAYNELİ	SHIM	2.40mm	◆	◆	◆
49		0730 008 296		1	GRUP MİLİ ÖN BİLYA RAYNELİ	SHIM	2.50mm	◆	◆	◆
49		0730 008 298		1	GRUP MİLİ ÖN BİLYA RAYNELİ	SHIM	2.60mm	◆	◆	◆
49		0730 008 301		1	GRUP MİLİ ÖN BİLYA RAYNELİ	SHIM	2.70mm	◆	◆	◆
49		0730 008 303		1	GRUP MİLİ ÖN BİLYA RAYNELİ	SHIM	2.80mm	◆	◆	◆
50		0750 117 640		2	GRUP MİLİ ÖN VE ARKA BİLYA	ROLLER BEARING	50.0X90.028.0mm			
51	K20.01862	1327 203 043		1	GRUP MİLİ KOMPLE	COUNTER SHAFT COMPLETE	19/19/28/38/44 T	◆		
51	K20.00795	1327 203 037		1	GRUP MİLİ KOMPLE	COUNTER SHAFT COMPLETE	19/19/28/38/44 T	◆		
51	K20.01863	1327 203 054	(1327 203 038)	1	GRUP MİLİ KOMPLE	COUNTER SHAFT COMPLETE	19/19/28/38/34 T		◆	◆
51		1327 203 057		1	GRUP MİLİ KOMPLE	COUNTER SHAFT COMPLETE				◆
52	K20.01864	1327 203 045		1	GRUP MİLİ KOMPLE	COUNTER SHAFT COMPLETE	19/19/28/38/44 T	◆		
52	K20.01866	1327 203 039		1	GRUP MİLİ KOMPLE	COUNTER SHAFT COMPLETE	19/19/28/38/44 T	◆		
52	K20.01865	1327 203 055	(1327 203 040)	1	GRUP MİLİ KOMPLE	COUNTER SHAFT COMPLETE	19/19/28/38/34 T		◆	◆
52		1327 203 060		1	GRUP MİLİ KOMPLE	COUNTER SHAFT COMPLETE				◆
53		0732 042 766		1	GRUP DURDURUCU PİSTON YAYI	SPRING		◆	◆	◆
54		0731 208 242		1	GRUP DURDURUCU PİSYON PİMİ	PIN		◆	◆	◆
55		1328 302 118		1	FREN KAPAĞI	COVER		◆	◆	◆
56		0631 306 699		3	FREN KAPAK PİMİ	PIN	M6X50	◆	◆	◆
57	K20.02008	1314 303 077		4	DİSK	DISK	1.50mm	◆	◆	◆
58	K20.02009	0501 214 821		2	BALATA	LINING		◆	◆	◆
59		1328 306 026		1	2.-3.VİTES HİLALİ	G-SHIFT FORK 2nd-3rd		◆	◆	◆
60		0631 329 120		2	HİLAL KİLİTLEME PİMİ	PIN	6.0X18.0mm	◆	◆	◆
61		1328 306 021		1	HİLAL KİTLEME	SPACER		◆	◆	◆
62		1328 306 034		1	HİLAL KİTLEME	INTERLOCK		◆	◆	◆
63		1327 206 004		1	GERİ -1./2.-3.VİTES HİLAL MİLİ	DRIVE SHAFT		◆	◆	◆
64		1327 306 007		1	GERİ-1.VİTES HİLALİ	G-SHIFT FORK RG-1st		◆	◆	◆
65		1328 212 002		1	TAKVİYE VİTES HİLALİ	G-SHIFT FORK Const.		◆	◆	◆
66	K20.02173	1328 312 005		1	TAKVİYE VİTES HİLAL PABUCU	SLIDING BLOCK		◆	◆	◆
67	K20.02007	1328 305 007		1	KÜÇÜK GERİ VİTES DİŞLİ PİMİ	REVERSE SHAFT		◆	◆	◆
68		0735 321 454		1	KÜÇÜK GERİ VİTES MASURA BİLYA	NEEDLE BEARING	40.0X48.0X40.0mm	◆	◆	◆
69	K20.01860	1328 305 015	(1328 305 014)	1	KÜÇÜK GERİ VİTES DİŞLİSİ 29 DİŞ	REVERSE IDLER GEAR 29 T		◆	◆	◆
70	K20.02143	0501 323 922		kit	ŞANZIMAN CONTA TAKIMI	GASKET KIT		◆	◆	◆

NOTES :

X1,X2,X3 are used in conjunction with the encoded parts.

(X1) : 12 AS 1630 TD, 12 AS 1930 TD, 12 AS 1931 TD, 12 AS 1935 TD
12 AS 2130 TD, 12 AS 2301 TD, 12 AS 2330 TD, 12 AS 2335 TD

(X2) : 12 AS 1930 TO, 12 AS 2130 TO, 12 AS 2330 TO, 12 AS 2530 TO

(X3) : 12 AS 2331 TO

NOTLAR :

X1,X2,X3 ile kodlanan parçalar birlikte kullanılır.

(X1) : 12 AS 1630 TD, 12 AS 1930 TD, 12 AS 1931 TD, 12 AS 1935 TD
12 AS 2130 TD, 12 AS 2301 TD, 12 AS 2330 TD, 12 AS 2335 TD

(X2) : 12 AS 1930 TO, 12 AS 2130 TO, 12 AS 2330 TO, 12 AS 2530 TO

(X3) : 12 AS 2331 TO

Original parts names, oem numbers, symbols and descriptions used in this catalogue are for reference purposes only.

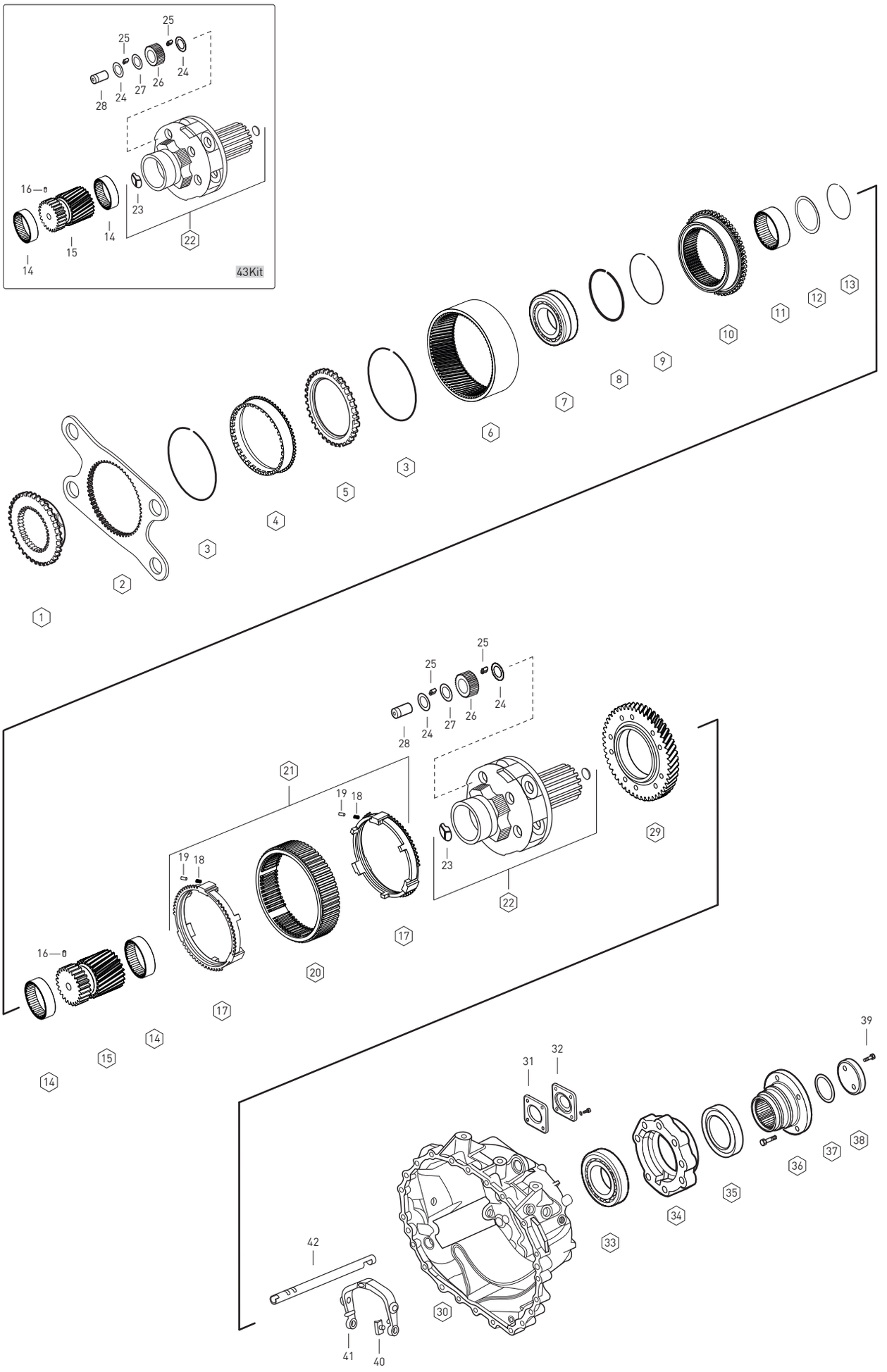

Original parts names, oem numbers, symbols and descriptions used in this catalogue are for reference purposes only.

Fig.	Kacmaz No.	Oem No	Oem Old No	Pcs.	Ürün Tanımı	Description	Sizes	(X1)	(X2)	(X3)
1	K20.02084	1328 333 010	(1314 333 031)	1	AĞIR SERİ SENKROMENÇ	ENGAGING RING		◆	◆	◆
2	K20.02081	1328 333 006		1	TEPSİ SENKROMENÇ	FLANGE		◆	◆	◆
3	K20.02085	0730 302 523	(0730 513 682)	2	ÇEMBER DİŞLİ SEGMANI	SPRING RING		◆	◆	◆
4	K20.02086	1328 332 024		1	ÇEMBER DİŞLİ TAŞIYICI	CROWN SUPPORT 82 T	OLD	◆	◆	
4	K20.02087	1358 332 221		1	ÇEMBER DİŞLİ TAŞIYICI	CROWN SUPPORT	NEW	◆	◆	◆
5	K20.02088	1328 332 046		1	ÇEMBER DİŞLİ TAŞIYICI	FOLLOWER RING 82 T	OLD	◆	◆	
5	K20.02089	1358 332 222		1	ÇEMBER DİŞLİ TAŞIYICI	FOLLOWER RING	NEW	◆	◆	◆
6	K20.01953	1328 332 045		1	ÇEMBER DİŞLİ	RING WHEEL 82 T	OLD	◆	◆	
6	K20.01946	1358 332 206		1	ÇEMBER DİŞLİ	RING WHEEL	NEW	◆	◆	
6		1358 332 245		1	ÇEMBER DİŞLİ	RING WHEEL				◆
7	K20.01163	0750 118 284		1	ŞANZIMAN HEYKELİ ÖN BİLYA	ROLLER BEARING	100.0X130.0X30.0mm	◆	◆	◆
8	K20.02091	0630 513 139		1	SEGMAN	ELASTIC RING		◆	◆	◆
9	K20.02090	0730 513 745		1	SEGMAN	ELASTIC RING	2.50mm	◆	◆	◆
10	K20.02092	1328 333 009		1	AĞIR SERİ SENKROMENÇ	ENGAGING RING		◆	◆	◆
11	K20.02093	1328 304 068		1	BURC	SLIDING		◆	◆	
11		1358 304 247		1	BURC	SLIDING				◆
12	K20.02094	0730 003 884		1	RAYNEL	SHIM	1.00mm	◆	◆	◆
12	K20.02095	0730 003 894		1	RAYNEL	SHIM	1.50mm	◆	◆	◆
12	K20.02096	0730 003 904		1	RAYNEL	SHIM	2.00mm	◆	◆	◆
12	K20.02097	0730 003 914		1	RAYNEL	SHIM	2.50mm	◆	◆	◆
12	K20.02098	0730 004 637		1	RAYNEL	SHIM	3.00mm	◆	◆	◆
12	K20.02099	0730 004 643		1	RAYNEL	SHIM	3.30mm	◆	◆	◆
13	K20.02100	0630 502 218		1	SEGMAN	SEEGER RING	64.0X2.0mm	◆	◆	
13		0730 303 670		1	SEGMAN	SEEGER RING	64.0X2.0mm			◆
14	K20.02101	1358 332 223	(1328 332 023)	2	GÜNEŞ DİŞLİ BURCU	FOLLOWER RING 23 T		◆	◆	◆
15	K20.01954	1358 332 247	(1358 332 244)	1	GÜNEŞ DİŞLİ	SUN GEAR		◆	◆	◆
			(1328 332 030)							
16	K20.02102	7636 038 103		2	GÜNEŞ DİŞLİ PİMİ	PIN	3.00mm	◆	◆	
16		1358 332 015		2	GÜNEŞ DİŞLİ PİMİ	PIN	4.30mm			◆
17	K20.01967	1328 333 005		2	AĞIR SERİ SENK.FRENLEME	SYNCHRONIZING CONE		◆	◆	◆
18	K20.01970	0732 040 929		6	AĞIR SERİ SENK.BASKI YAYI	PRESSURE SPRING		◆	◆	◆
19	K20.01971	0730 162 804		6	AĞIR SERİ SENKROMENÇ BURCU	ELASTIC BUSH		◆	◆	◆
20	K20.01966	1358 333 012	(1328 333 003)	1	AĞIR SERİ SENKROMENÇ HALKA	ENGAGING SLEEVE		◆	◆	
20		1358 333 020		1	AĞIR SERİ SENKROMENÇ HALKA	ENGAGING SLEEVE				◆
21	K20.01968	1328 233 001		kit	AĞIR SERİ SENKROMENÇ KİTİ	SYNCHRONIZER KIT		◆	◆	
22	K20.02103	1358 232 202	(1358 232 201)	1	ŞANZIMAN HEYKELİ	PLANETARY CARRIER		◆	◆	◆
			(1328 232 016)							
23	K20.02174	0501 330 535		1	ŞANZIMAN HEYKEL PULU	THRUST WASHER		◆	◆	◆
24	K20.01515	0730 109 323		10	HEYKEL KOZA DİŞLİ PULU	THRUST WASHER	2.30mm	◆	◆	◆
25	K20.01454	0750 119 116		140	HEYEL KOZA DİŞLİ TANE BİLYA	NEEDLE ROLLER	10.0X16.8mm	◆	◆	◆
26	K20.02104	1358 232 013	(1358 232 010)	1	HEYKEL KOZA DİŞLİ TK.28 DİŞ (5 Lİ)	GEAR SET 28 T (5 PCS)		◆	◆	◆

NOTES :

X1,X2,X3 are used in conjunction with the encoded parts.

(X1) : 12 AS 1630 TD, 12 AS 1930 TD, 12 AS 1931 TD, 12 AS 1935 TD
12 AS 2130 TD, 12 AS 2301 TD, 12 AS 2330 TD, 12 AS 2335 TD

(X2) : 12 AS 1930 TO, 12 AS 2130 TO, 12 AS 2330 TO, 12 AS 2530 TO

(X3) : 12 AS 2331 TO

NOTLAR :

X1,X2,X3 ile kodlanan parçalar birlikte kullanılır.

(X1) : 12 AS 1630 TD, 12 AS 1930 TD, 12 AS 1931 TD, 12 AS 1935 TD
12 AS 2130 TD, 12 AS 2301 TD, 12 AS 2330 TD, 12 AS 2335 TD

(X2) : 12 AS 1930 TO, 12 AS 2130 TO, 12 AS 2330 TO, 12 AS 2530 TO

(X3) : 12 AS 2331 TO

Original parts names, oem numbers, symbols and descriptions used in this catalogue are for reference purposes only.

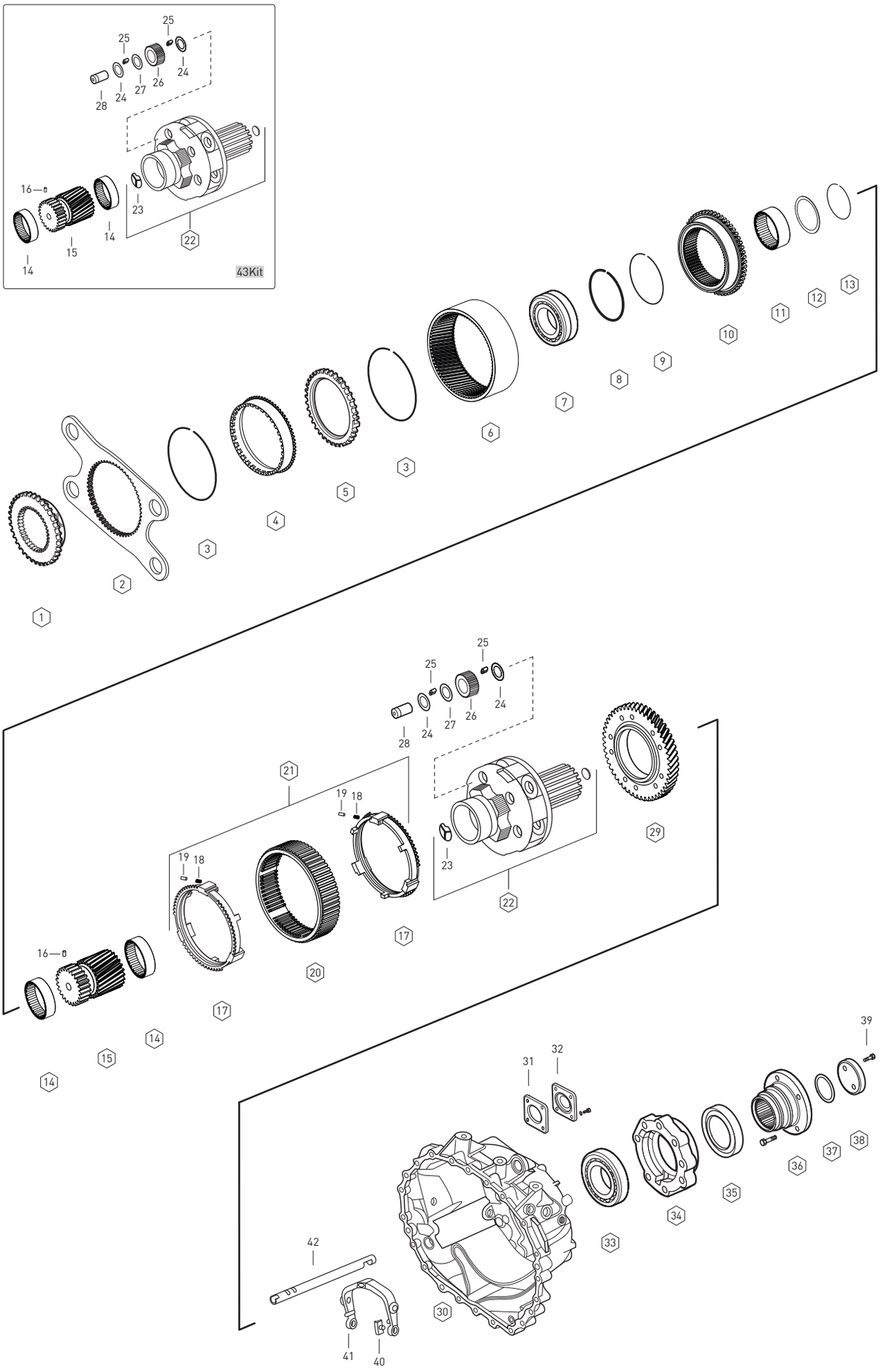

Original parts names, oem numbers, symbols and descriptions used in this catalogue are for reference purposes only.

Fig.	Kacmaz No.	Oem No	Oem Old No	Pcs.	Ürün Tanımı	Description	Sizes	(X1)	(X2)	(X3)
27	K20.02105	0730 109 640		5	HEYKEL KOZA DİŞLİ PULU	THRUST WASHER	9.00mm	◆	◆	◆
28	K20.02106	1358 332 229	(1328 332 041)	5	HEYKEL KOZA DİŞLİ PİMİ	PLANET SHAFT		◆	◆	◆
29	K20.01955	6085 301 217		1	RETARDER DİŞLİSİ	RETARDER GEAR		◆	◆	
29	K20.01078	6093 304 090		1	RETARDER DİŞLİSİ	RETARDER GEAR				◆
29		6093 304 028		1	RETARDER DİŞLİSİ	RETARDER GEAR				◆
29	K20.02220	6085 301 093		1	RETARDER DİŞLİSİ	RETARDER GEAR				◆
30	K20.02107	1328 201 033		1	ŞANZIMAN ARKA GÖVDE	HOUSING		◆	◆	◆
31	K20.02108	1238 308 201	(1238 308 166)	1	PTO BAĞLANTI KAPAK CONTASI	GASKET		◆	◆	◆
32	K20.02109	1328 301 170		1	PTO BAĞLANTI KAPAĞI	COVER		◆	◆	◆
33	K20.01134	0750 116 394	(0750 116 002)	1	ŞANZIMAN ARKA BİLYA	ROLLER BEARING	90.0X160.0X30.0mm	◆	◆	◆
			(0635 304 904)							
34	K20.02110	1328 331 004		1	ŞANZ.ARKA BİLYA KAPAĞI	BEARING COVER		◆	◆	◆
35	K20.01022	0734 319 459	(0734 300 421)	1	ŞANZIMAN FLANŞ KEÇESİ	OIL SEAL	105.0X125.0X12/16mm	◆	◆	◆
36	K20.02111	1358 332 210		1	ŞANZIMAN FLANŞI	COMPANION FLANGE		◆	◆	◆
36	K20.02112	1348 332 226		1	ŞANZIMAN FLANŞI	COMPANION FLANGE		◆	◆	
37	K20.02113	0634 313 805		1	ŞANZIMAN FLANŞ ORİNGİ	O-RING	82.0X4.0mm	◆	◆	◆
38	K20.01681	1312 332 028		1	ŞANZIMAN FLANŞ VİDA PULU	WASHER		◆	◆	◆
39	K20.02114	0636 011 777		2	ŞANZIMAN FLANŞ VİDASI	SCREW	M12X60	◆	◆	◆
40	K20.02115	1328 334 004		2	AĞIR SERİ HİLAL PABUCU	SLIDING BLOCK		◆	◆	◆
41	K20.02116	1328 334 017		1	AĞIR SERİ HİLALİ	G-SHIFT FORK		◆	◆	◆
42	K20.02117	1327 334 009		1	AĞIR SERİ HİLAL MİLİ	ROD		◆	◆	◆
43	K20.02171	1358 232 202	(1358 232 201)	kit	ŞANZIMAN HEYKELİ DOLU	PLANETARY CARRIER FULL		◆	◆	◆
			(1328 232 016)							

NOTES :

X1,X2,X3 are used in conjunction with the encoded parts.

(X1) : 12 AS 1630 TD, 12 AS 1930 TD, 12 AS 1931 TD, 12 AS 1935 TD
12 AS 2130 TD, 12 AS 2301 TD, 12 AS 2330 TD, 12 AS 2335 TD

(X2) : 12 AS 1930 TO, 12 AS 2130 TO, 12 AS 2330 TO, 12 AS 2530 TO

(X3) : 12 AS 2331 TO

NOTLAR :

X1,X2,X3 ile kodlanan parçalar birlikte kullanılır.

(X1) : 12 AS 1630 TD, 12 AS 1930 TD, 12 AS 1931 TD, 12 AS 1935 TD
12 AS 2130 TD, 12 AS 2301 TD, 12 AS 2330 TD, 12 AS 2335 TD

(X2) : 12 AS 1930 TO, 12 AS 2130 TO, 12 AS 2330 TO, 12 AS 2530 TO

(X3) : 12 AS 2331 TO

Original parts names, oem numbers, symbols and descriptions used in this catalogue are for reference purposes only.

NOTES / NOTLAR

Original parts names, oem numbers, symbols and descriptions used in this catalogue are for reference purposes only.

16 AS TRONIC	
16 AS 2230 TD 16 AS 2231 TD	16 AS 2600 TO 16 AS 2601 TO 16 AS 2630 TO 16 AS 2635 TO

Original parts names, oem numbers, symbols and descriptions used in this catalogue are for reference purposes only.

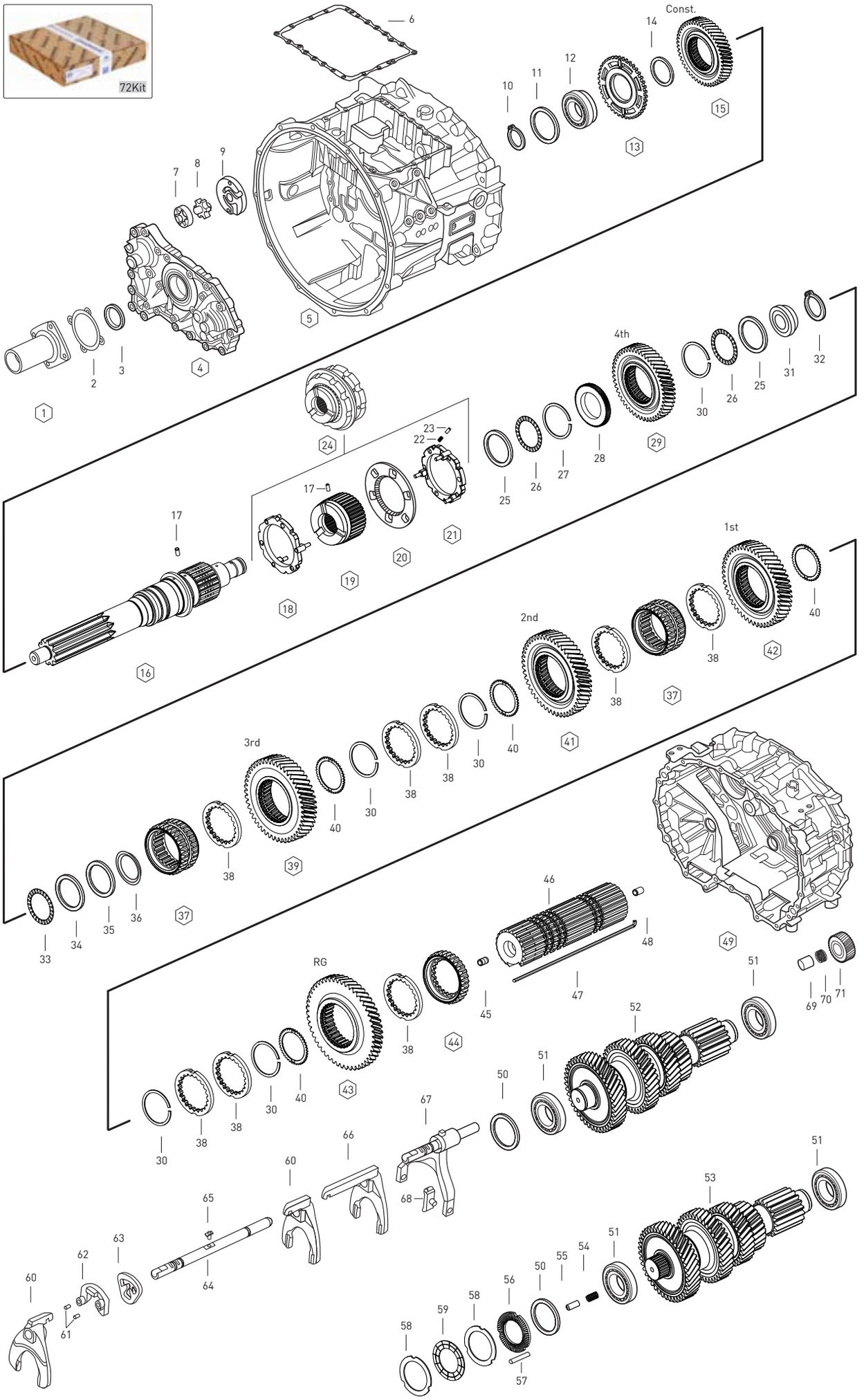

Original parts names, oem numbers, symbols and descriptions used in this catalogue are for reference purposes only.

Fig.	Kacmaz No.	Oem No	Oem Old No	Pcs.	Ürün Tanımı	Description	Sizes	(X1): 16 AS 2230 TD	(X2): 16 AS 2630 TO	(X3): 16 AS 2600 TO
1		1328 302 202		1	PRİZ.KEÇE KAPAĞI	COVER		◆	◆	◆
2		0501 321 451		1	PRİZ.KEÇE KAPAK CONTASI	GASKET		◆	◆	◆
3		0734 319 847		1	PRİZDİREK KEÇESİ	OIL SEAL	55.0X70.0X8.0mm	◆	◆	◆
4		1328 302 096		1	ÖN KAPAK	FRONT COVER		◆	◆	◆
5		0769 171 964		1	ŞANZIMAN ÖN GÖVDE	HOUSING		◆	◆	
5		1328 301 142		1	ŞANZIMAN ÖN GÖVDE	HOUSING			◆	
5		1328 301 139		1	ŞANZIMAN ÖN GÖVDE	HOUSING		◆	◆	◆
5		1328 301 141		1	ŞANZIMAN ÖN GÖVDE	HOUSING			◆	
5		1328 301 144		1	ŞANZIMAN ÖN GÖVDE	HOUSING			◆	
6	K20.02144	0501 316 322		1	ŞANZIMAN ÖN GÖVDE CONTASI	GASKET		◆	◆	◆
7	K20.00543	1315 303 027		1	YAĞ POMPA DIŞ ROTOR	ROTOR		◆	◆	◆
8	K20.00542	1314 202 039		1	YAĞ POMPA İÇ ROTOR	OIL PUMP GEAR		◆	◆	◆
9		1328 302 203		1	YAĞ POMPA KAPAĞI	PUMP COVER		◆	◆	◆
10	K20.02186	0730 501 590		1	PRİZDİREK ÖN BİLYA SEGMANI	RETAINING RING	3.30mm	◆	◆	◆
10	K20.02187	0730 501 592		1	PRİZDİREK ÖN BİLYA SEGMANI	RETAINING RING	3.40mm	◆	◆	◆
10	K20.02188	0730 501 594		1	PRİZDİREK ÖN BİLYA SEGMANI	RETAINING RING	3.50mm	◆	◆	◆
10	K20.02189	0730 501 596		1	PRİZDİREK ÖN BİLYA SEGMANI	RETAINING RING	3.60mm	◆	◆	◆
10	K20.02190	0730 501 356		1	PRİZDİREK ÖN BİLYA SEGMANI	RETAINING RING	3.80mm	◆	◆	◆
10	K20.02191	0730 501 358		1	PRİZDİREK ÖN BİLYA SEGMANI	RETAINING RING	3.90mm	◆	◆	◆
10	K20.02192	0730 501 360		1	PRİZDİREK ÖN BİLYA SEGMANI	RETAINING RING	4.00mm	◆	◆	◆
11		0730 008 520		1	PRİZDİREK ÖN BİLYA RAYNELİ	SHIM	1.40mm	◆	◆	◆
11		0730 008 522		1	PRİZDİREK ÖN BİLYA RAYNELİ	SHIM	1.50mm	◆	◆	◆
11		0730 008 524		1	PRİZDİREK ÖN BİLYA RAYNELİ	SHIM	1.60mm	◆	◆	◆
11		0730 008 526		1	PRİZDİREK ÖN BİLYA RAYNELİ	SHIM	1.70mm	◆	◆	◆
11		0730 008 528		1	PRİZDİREK ÖN BİLYA RAYNELİ	SHIM	1.80mm	◆	◆	◆
11		0730 008 530		1	PRİZDİREK ÖN BİLYA RAYNELİ	SHIM	1.90mm	◆	◆	◆
11		0730 008 532		1	PRİZDİREK ÖN BİLYA RAYNELİ	SHIM	2.00mm	◆	◆	◆
12		0750 116 365		1	PRİZDİREK ÖN BİLYA	ROLLER BEARING	65.0X120.0X23.0mm	◆	◆	◆
13		1328 302 024		1	DEVİR OKUYUCU	DISK		◆	◆	◆
14		0730 110 392		1	TAKVİYE DİŞLİSİ İÇ PULU	WASHER	6.00mm	◆	◆	◆
15	K20.01857	1328 302 063		1	TAKVİYE DİŞLİSİ 40 DİŞ	CONSTANT GEAR 40 T			◆	◆
15	K20.01858	1328 302 062		1	TAKVİYE DİŞLİSİ 32 DİŞ	CONSTANT GEAR 32 T		◆		◆
16	K20.00922	1328 302 077		1	PRİZDİREK	INPUT SHAFT		◆	◆	◆
16	K20.01952	1328 302 080		1	PRİZDİREK	INPUT SHAFT		◆	◆	◆
16	K20.00882	1328 302 078		1	PRİZDİREK	INPUT SHAFT		◆	◆	◆
16	K20.01956	1328 302 119		1	PRİZDİREK	INPUT SHAFT			◆	
16	K20.01957	1328 302 082		1	PRİZDİREK	INPUT SHAFT			◆	◆
16	K20.01958	1328 302 133		1	PRİZDİREK	INPUT SHAFT		◆		
16	K20.01959	1328 302 079		1	PRİZDİREK	INPUT SHAFT		◆		◆
17		1328 302 072		1	PRİZDİREK PİMİ	PIN		◆	◆	◆
18	K20.01839	1328 202 046		1	TAKVİYE FRENLEME	SYNCHRONIZER CONE		◆	◆	◆

NOTES :

X1, X2, X3 are used in conjunction with the encoded parts.
(X1) : 16 AS 2230 TD - 16 AS 2231 TD
(X2) : 16 AS 2630 TO - 16 AS 2635 TO
(X3) : 16 AS 2600 TO - 16 AS 2601 TO

NOTLAR :

X1, X2, X3 ile kodlanan parçalar birlikte kullanılır.
(X1) : 16 AS 2230 TD - 16 AS 2231 TD
(X2) : 16 AS 2630 TO - 16 AS 2635 TO
(X3) : 16 AS 2600 TO - 16 AS 2601 TO

Original parts names, oem numbers, symbols and descriptions used in this catalogue are for reference purposes only.

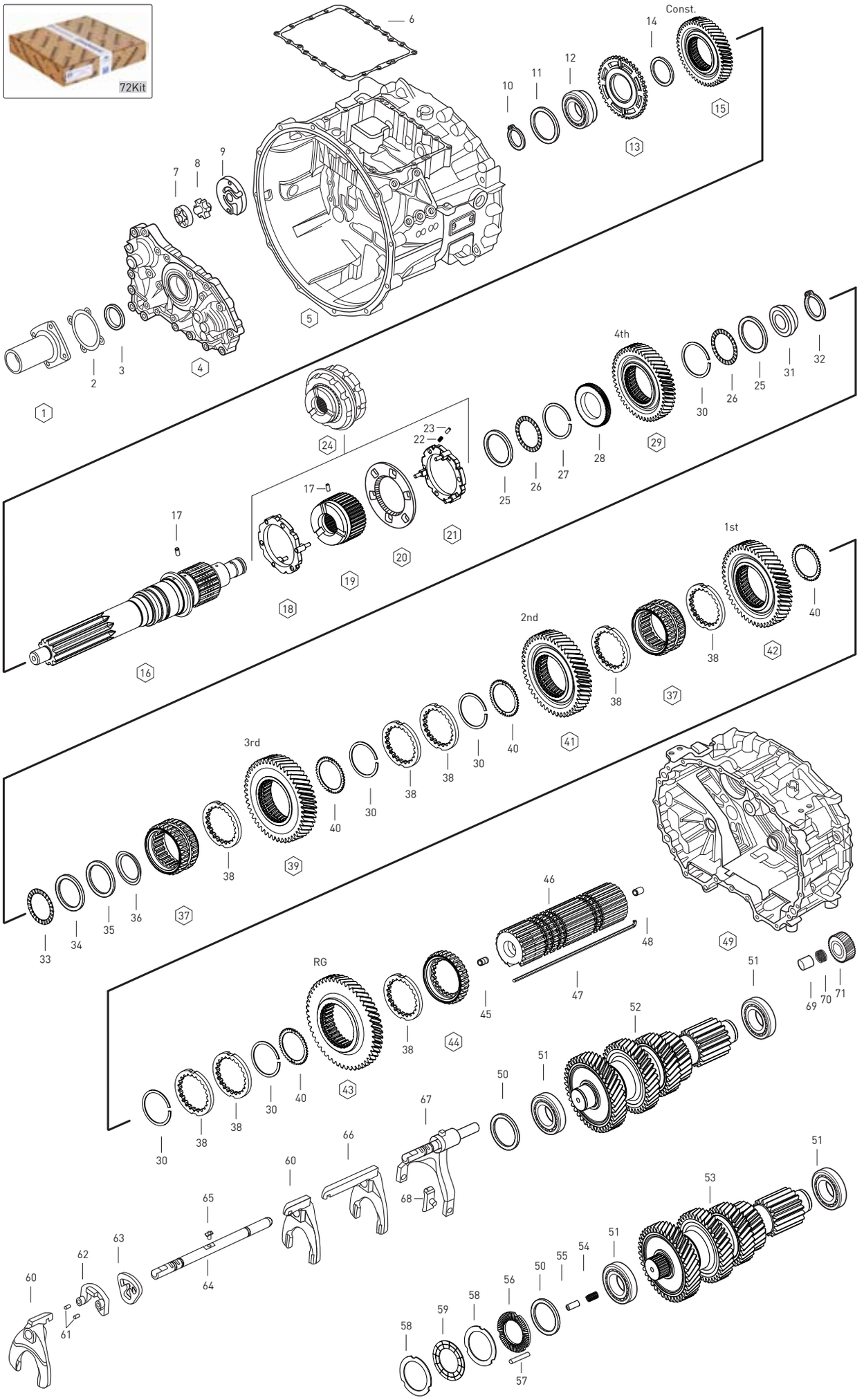

Original parts names, oem numbers, symbols and descriptions used in this catalogue are for reference purposes only.

Fig.	Kacmaz No.	Oem No	Oem Old No	Pcs.	Ürün Tanımı	Description	Sizes	(X1): 16 AS 2230 TD	(X2): 16 AS 2630 TO	(X3): 16 AS 2600 TO
19	K20.01844	1328 302 064		1	TAKVİYE SENKROMENÇ	SYNCHRONIZER RING		◆	◆	◆
20	K20.01843	1328 302 132		1	TAKVİYE FRENLEME PLEYT	ROTATE PLATE		◆	◆	◆
21	K20.01841	1328 202 048		1	TAKVİYE FRENLEME	SYNCHRONIZER CONE			◆	◆
21	K20.01842	1328 202 047		1	TAKVİYE FRENLEME	SYNCHRONIZER CONE		◆		◆
22	K20.00469	0732 040 385		3	PRİZDİREK YAYI	SPRING	0.70mm	◆	◆	◆
23		0635 470 046		3	PRİZDİREK PİMİ	PIN		◆	◆	◆
24	K20.01786	1328 202 049	(1328 298 001)	kit	TAKVİYE FRENLEME KİTİ	SYNCHRONIZING CONE KIT			◆	◆
24	K20.01840	1328 298 002		kit	TAKVİYE FRENLEME KİTİ	SYNCHRONIZING CONE KIT		◆		◆
25	K20.02194	0730 111 066		2	İĞNE RULMAN ALIN PULU	THRUST WASHER		◆	◆	◆
26	K20.01474	0735 301 274	(0735 321 487)	2	4.VİTES İĞNE RULMAN	AXIAL NEEDLE		◆	◆	◆
27		0730 513 973		1	4.VİTES DİŞLİ SEGMANI	ELASTIC RING	2.50mm	◆	◆	◆
28	K20.02168	1328 302 061		1	4.VİTES DİŞLİ PULU	FOLLOWER RING		◆	◆	◆
29	K20.01856	1328 304 044		1	4.VİTES DİŞLİSİ 34 DİŞ	GEAR 4th 34 T		◆	◆	◆
30		0730 514 006		5	4.VİTES DİŞLİ SEGMANI	ELASTIC RING	2.55mm	◆	◆	◆
30		0730 514 007		5	4.VİTES DİŞLİ SEGMANI	ELASTIC RING	2.60mm	◆	◆	◆
30		0730 514 008		5	4.VİTES DİŞLİ SEGMANI	ELASTIC RING	2.65mm	◆	◆	◆
30		0730 514 009		5	4.VİTES DİŞLİ SEGMANI	ELASTIC RING	2.70mm	◆	◆	◆
30		0730 514 010		5	4.VİTES DİŞLİ SEGMANI	ELASTIC RING	2.75mm	◆	◆	◆
30		0730 514 011		5	4.VİTES DİŞLİ SEGMANI	ELASTIC RING	2.80mm	◆	◆	◆
31		1328 302 075		1	PRİZDİREK AYAR PULU	THRUST RING		◆	◆	◆
32		0730 513 641		1	PRİZDİREK KİLİT SEGMANI	RETAINER RING	2.00mm	◆	◆	◆
33	K20.01473	0735 301 881	(0735 321 381)	1	PRİZDİREK İĞNE RULMAN	AXIAL NEEDLE	30.0X52.0X7.5mm	◆	◆	◆
34	K20.02193	0730 109 641		1	PRİZDİREK ALIN PULU	THRUST WASHER	5.00mm	◆	◆	◆
35		1328 202 038		1	PARÇALI KİLİT	SPLIT RING		◆	◆	◆
36		0730 063 258		1	KİLİTLEME SACI	LOCK RING	5.90mm	◆	◆	◆
37	K20.01845	1328 304 064	(1328 304 043)	2	SENKROMENÇ HALKA	SLIDING SLEEVE		◆	◆	◆
38	K20.01846	1314 304 008		8	İÇİ FREZELİ PUL	WASHER	7.00mm	◆	◆	◆
39	K20.01855	1328 304 040		1	3.VİTES DİŞLİSİ 42 DİŞ	GEAR 3rd 42 T		◆	◆	◆
40	K20.01847	1314 304 119		4	DIŞI FREZELİ PUL	WASHER		◆	◆	◆
41	K20.01854	1328 304 018		1	2.VİTES DİŞLİSİ 48 DİŞ	GEAR 2nd 48 T		◆	◆	◆
42	K20.01832	1328 304 060		1	1.VİTES DİŞLİSİ 54 DİŞ	GEAR 1st 54 T		◆	◆	◆
43	K20.01831	1328 304 067	(1328 304 061)	1	GERİ VİTES DİŞLİSİ 50 DİŞ	REVERSE GEAR 50 T		◆	◆	◆
44	K20.01861	1314 304 139		1	GERİ VİTES HALKASI	SLIDING SLEEVE		◆	◆	◆
45		1314 304 097		1	KAMALI MİL YAĞ BORUSU	OIL TUBE		◆	◆	◆
46	K20.01859	1328 304 063		1	KAMALI MİL	MAIN SHAFT		◆	◆	◆
47		1328 304 035		1	KİLİTLEME MİLİ	KEY SHAFT		◆	◆	◆
48		1314 332 043		1	KAMALI MİL YAĞ BORUSU	OIL TUBE		◆	◆	◆
49		1328 301 163		1	ŞANZIMAN ORTA GÖVDE	HOUSING		◆	◆	◆
50		0730 009 051		1	GRUP MİLİ ÖN BİLYA RAYNELİ	SHIM	1.70mm	◆	◆	◆
50		0730 009 052		1	GRUP MİLİ ÖN BİLYA RAYNELİ	SHIM	1.80mm	◆	◆	◆
50		0730 009 053		1	GRUP MİLİ ÖN BİLYA RAYNELİ	SHIM	1.90mm	◆	◆	◆

NOTES :

X1, X2, X3 are used in conjunction with the encoded parts.
(X1) : 16 AS 2230 TD - 16 AS 2231 TD
(X2) : 16 AS 2630 TO - 16 AS 2635 TO
(X3) : 16 AS 2600 TO - 16 AS 2601 TO

NOTLAR :

X1, X2, X3 ile kodlanan parçalar birlikte kullanılır.
(X1) : 16 AS 2230 TD - 16 AS 2231 TD
(X2) : 16 AS 2630 TO - 16 AS 2635 TO
(X3) : 16 AS 2600 TO - 16 AS 2601 TO

Original parts names, oem numbers, symbols and descriptions used in this catalogue are for reference purposes only.

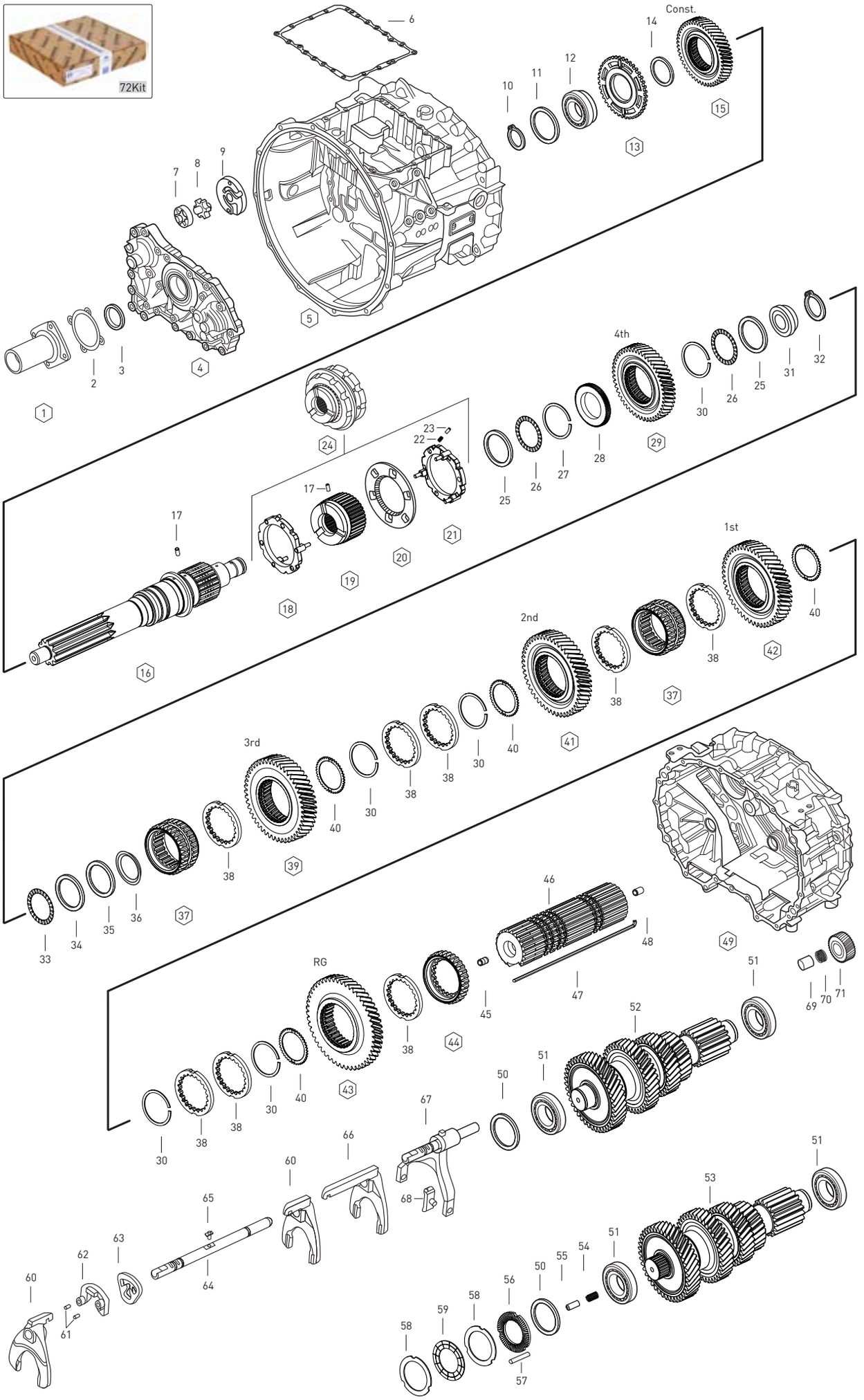

Original parts names, oem numbers, symbols and descriptions used in this catalogue are for reference purposes only.

Fig.	Kacmaz No.	Oem No	Oem Old No	Pcs.	Ürün Tanımı	Description	Sizes	(X1): 16 AS 2230 TD	(X2): 16 AS 2630 TO	(X3): 16 AS 2600 TO
50		0730 007 784		1	GRUP MİLİ ÖN BİLYA RAYNELİ	SHIM	2.10mm	◆	◆	◆
50		0730 007 786		1	GRUP MİLİ ÖN BİLYA RAYNELİ	SHIM	2.20mm	◆	◆	◆
50		0730 008 292		1	GRUP MİLİ ÖN BİLYA RAYNELİ	SHIM	2.30mm	◆	◆	◆
50		0730 008 294		1	GRUP MİLİ ÖN BİLYA RAYNELİ	SHIM	2.40mm	◆	◆	◆
50		0730 008 296		1	GRUP MİLİ ÖN BİLYA RAYNELİ	SHIM	2.50mm	◆	◆	◆
50		0730 008 298		1	GRUP MİLİ ÖN BİLYA RAYNELİ	SHIM	2.60mm	◆	◆	◆
50		0730 008 301		1	GRUP MİLİ ÖN BİLYA RAYNELİ	SHIM	2.70mm	◆	◆	◆
50		0730 008 303		1	GRUP MİLİ ÖN BİLYA RAYNELİ	SHIM	2.80mm	◆	◆	◆
51		0750 117 640		2	GRUP MİLİ ÖN VE ARKA BİLYA	ROLLER BEARING	50.0X90.028.0mm	◆	◆	◆
52	K20.00945	1328 203 050		1	GRUP MİLİ KOMPLE	COUNTER SHAFT COMPLETE	19/25/32/37/36 T		◆	◆
52	K20.01870	1328 203 057	(1328 203 049)	1	GRUP MİLİ KOMPLE	COUNTER SHAFT COMPLETE	19/25/32/37/42 T	◆		◆
53	K20.00944	1328 203 052		1	GRUP MİLİ KOMPLE	COUNTER SHAFT COMPLETE	19/25/32/37/36 T		◆	◆
53	K20.01871	1328 203 056	(1328 203 051)	1	GRUP MİLİ KOMPLE	COUNTER SHAFT COMPLETE	19/25/32/37/42 T	◆		◆
54		0732 042 766		1	GRUP DURDURUCU PİSTON YAYI	SPRING		◆	◆	◆
55		0731 208 242		1	GRUP DURDURUCU PİSTON PİMİ	PIN		◆	◆	◆
56		1328 302 118		1	FREN KAPAĞI	COVER		◆	◆	◆
57		0631 306 699		3	FREN KAPAK PİMİ	PIN	M6X50	◆	◆	◆
58	K20.02008	1314 303 077		4	DİSK	DISK	1.50mm	◆	◆	◆
59	K20.02010	0501 214 822		2	BALATA	LINING		◆	◆	◆
60		1328 306 026		2	1.-2./3.-4. VİTES HİLALİ	G-SHIFT FORK		◆	◆	◆
61		0631 329 120		2	HİLAL KİLİTLEME PİMİ	PIN	6.0X18.0mm	◆	◆	◆
62		1328 306 021		1	HİLAL KİTLEME	SPACER		◆	◆	◆
63		1328 306 034		1	HİLAL KİTLEME	INTERLOCK		◆	◆	◆
64		1328 206 006		1	HİLAL MİLİ	DRIVE SHAFT		◆	◆	◆
65		1328 306 027		1	HİLAL MİLİ KİTLEMESİ	SLIDING BLOCK		◆	◆	◆
66		1328 306 033		1	GERİ VİTES HİLALİ	G-SHIFT FORK RG		◆	◆	◆
67		1328 212 002		1	TAKVİYE VİTES HİLALİ	FORK GV		◆	◆	◆
68	K20.02173	1328 312 005		2	HİLAL PABUCU	SLIDING BLOCK		◆	◆	◆
69	K20.02007	1328 305 007		1	KÜÇÜK GERİ VİTES DİŞLİ PİMİ	REVERSE SHAFT		◆	◆	◆
70		0735 321 454		1	KÜÇÜK GERİ VİTES MASURA BİLYA	NEEDLE BEARING	40.0X48.0X40.0mm	◆	◆	◆
71	K20.01860	1328 305 015	(1328 305 014)	1	KÜÇÜK GERİ VİTES DİŞLİSİ 29 DİŞ	REVERSE IDLER GEAR 29 T		◆	◆	◆
72	K20.02143	0501 323 922		kit	ŞANZIMAN CONTA TAKIMI	GASKET KIT		◆	◆	◆

NOTES :

X1, X2, X3 are used in conjunction with the encoded parts.
(X1) : 16 AS 2230 TD - 16 AS 2231 TD
(X2) : 16 AS 2630 TO - 16 AS 2635 TO
(X3) : 16 AS 2600 TO - 16 AS 2601 TO

NOTLAR :

X1, X2, X3 ile kodlanan parçalar birlikte kullanılır.
(X1) : 16 AS 2230 TD - 16 AS 2231 TD
(X2) : 16 AS 2630 TO - 16 AS 2635 TO
(X3) : 16 AS 2600 TO - 16 AS 2601 TO

Original parts names, oem numbers, symbols and descriptions used in this catalogue are for reference purposes only.

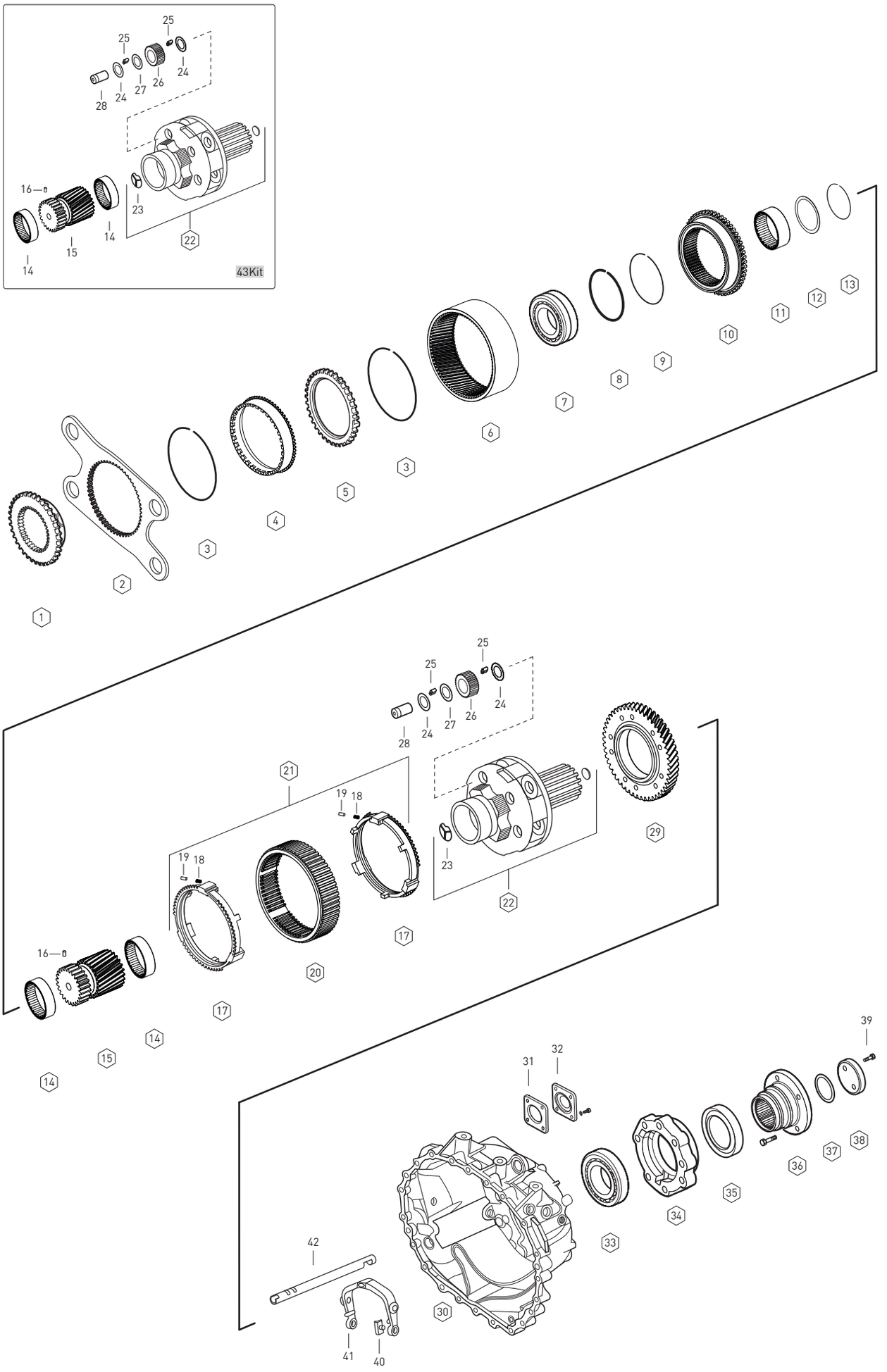

Original parts names, oem numbers, symbols and descriptions used in this catalogue are for reference purposes only.

Fig.	Kacmaz No.	Oem No	Oem Old No	Pcs.	Ürün Tanımı	Description	Sizes	(X1): 16 AS 2230 TD	(X2): 16 AS 2630 TO	(X3): 16 AS 2600 TO
1	K20.02084	1328 333 010	(1314 333 031)	1	AĞIR SERİ SENK.FRENLEME	SYNCHRONIZING CONE		◆	◆	◆
2	K20.02081	1328 333 006		1	TEPSİ SENKROMENÇ	FLANGE		◆	◆	◆
3	K20.02085	0730 302 523	(0730 513 682)	2	ÇEMBER DİŞLİ SEGMANI	SPRING RING		◆	◆	◆
4	K20.02086	1328 332 024		1	ÇEMBER DİŞLİ TAŞIYICI	CROWN SUPPORT 82 T	OLD	◆	◆	◆
4	K20.02087	1358 332 221		1	ÇEMBER DİŞLİ TAŞIYICI	CROWN SUPPORT	NEW	◆	◆	◆
5	K20.02088	1328 332 046		1	ÇEMBER DİŞLİ TAŞIYICI	FOLLOWER RING 82 T	OLD	◆	◆	◆
5	K20.02089	1358 332 222		1	ÇEMBER DİŞLİ TAŞIYICI	FOLLOWER RING	NEW	◆	◆	◆
6	K20.01953	1328 332 045		1	ÇEMBER DİŞLİ 82 DİŞ	RING WHEEL 82 T	OLD	◆	◆	◆
6	K20.01946	1358 332 206		1	ÇEMBER DİŞLİ 82 DİŞ	RING WHEEL 82 T	NEW	◆	◆	◆
7	K20.01163	0750 118 284		1	ŞANZIMAN HEYKELİ ÖN BİLYA	ROLLER BEARING	100.0X130.0X30.0mm	◆	◆	◆
8	K20.02091	0630 513 139		1	SEGMAN	ELASTIC RING		◆	◆	◆
9	K20.02090	0730 513 745		1	SEGMAN	ELASTIC RING	2.50mm	◆	◆	◆
10	K20.02092	1328 333 009		1	AĞIR SERİ SENK.FRENLEME	SYNCHRONIZING CONE		◆	◆	◆
11	K20.02093	1328 304 068		1	BURC	SLIDING		◆	◆	◆
12	K20.02094	0730 003 884		1	RAYNEL	SHIM	1.00mm	◆	◆	◆
12	K20.02095	0730 003 894		1	RAYNEL	SHIM	1.50mm	◆	◆	◆
12	K20.02096	0730 003 904		1	RAYNEL	SHIM	2.00mm	◆	◆	◆
12	K20.02097	0730 003 914		1	RAYNEL	SHIM	2.50mm	◆	◆	◆
12	K20.02098	0730 004 637		1	RAYNEL	SHIM	3.00mm	◆	◆	◆
12	K20.02099	0730 004 643		1	RAYNEL	SHIM	3.30mm	◆	◆	◆
13	K20.02100	0630 502 218		1	SEGMAN	SEEGER RING	64.0X2.0mm	◆	◆	◆
14	K20.02101	1358 332 223	(1328 332 023)	2	GÜNEŞ DİŞLİ BURCU	FOLLOWER RING 23 T		◆	◆	◆
15	K20.01954	1358 332 247	(1358 332 244)	1	GÜNEŞ DİŞLİ	SUN GEAR		◆	◆	◆
			(1328 332 030)							
16		1358 332 015		1	GÜNEŞ DİŞLİ PİMİ	PIN	4.30mm	◆	◆	◆
17	K20.01967	1328 333 005		2	AĞIR SERİ SENKROMENÇ	SYNCHRONIZER RING		◆	◆	◆
18	K20.01970	0732 040 929		6	AĞIR SERİ SENK.BASKI YAYI	PRESSURE SPRING		◆	◆	◆
19	K20.01971	0730 162 804		6	AĞIR SERİ SENKROMENÇ BURCU	ELASTIC BUSH		◆	◆	◆
20	K20.01966	1358 333 012	(1328 333 003)	1	AĞIR SERİ SENKROMENÇ HALKA	ENGAGING SLEEVE		◆	◆	◆
21	K20.01968	1328 233 001		kit	AĞIR SERİ SENKROMENÇ KİTİ	SYNCHRONIZER KIT		◆	◆	◆
22	K20.02103	1358 232 202	(1358 232 201)	1	ŞANZIMAN HEYKELİ	PLANETARY CARRIER		◆	◆	◆
			(1328 232 016)							
23	K20.02174	0501 330 535		1	ŞANZIMAN HEYKEL PULU	THRUST WASHER		◆	◆	◆
24	K20.01515	0730 109 323		10	HEYKEL KOZA DİŞLİ PULU	THRUST WASHER	2.30mm	◆	◆	◆
25	K20.01454	0750 119 116		140	HEYEL KOZA DİŞLİ TANE BİLYA	NEEDLE ROLLER	10.0X16.8mm	◆	◆	◆
26	K20.02104	1358 232 010		1	HEYKEL KOZA DİŞLİ TK.28 DİŞ (5 Lİ)	GEAR SET 28 T (5 PCS)		◆	◆	◆
27	K20.02105	0730 109 640		5	HEYKEL KOZA DİŞLİ PULU	THRUST WASHER	9.00mm	◆	◆	◆
28	K20.02106	1328 332 041		5	HEYKEL KOZA DİŞLİ PİMİ	PLANET SHAFT		◆	◆	◆
29	K20.01955	6085 301 217		1	RETARDER DİŞLİSİ	RETARDER GEAR		◆	◆	◆
30	K20.02107	1328 201 033		1	ŞANZIMAN ARKA GÖVDE	HOUSING		◆	◆	◆
31	K20.02108	1238 308 201	(1238 308 166)	1	PTO BAĞLANTI KAPAK CONTASI	GASKET		◆	◆	◆

NOTES :

X1, X2, X3 are used in conjunction with the encoded parts.
(X1) : 16 AS 2230 TD - 16 AS 2231 TD
(X2) : 16 AS 2630 TO - 16 AS 2635 TO
(X3) : 16 AS 2600 TO - 16 AS 2601 TO

NOTLAR :

X1, X2, X3 ile kodlanan parçalar birlikte kullanılır.
(X1) : 16 AS 2230 TD - 16 AS 2231 TD
(X2) : 16 AS 2630 TO - 16 AS 2635 TO
(X3) : 16 AS 2600 TO - 16 AS 2601 TO

Original parts names, oem numbers, symbols and descriptions used in this catalogue are for reference purposes only.

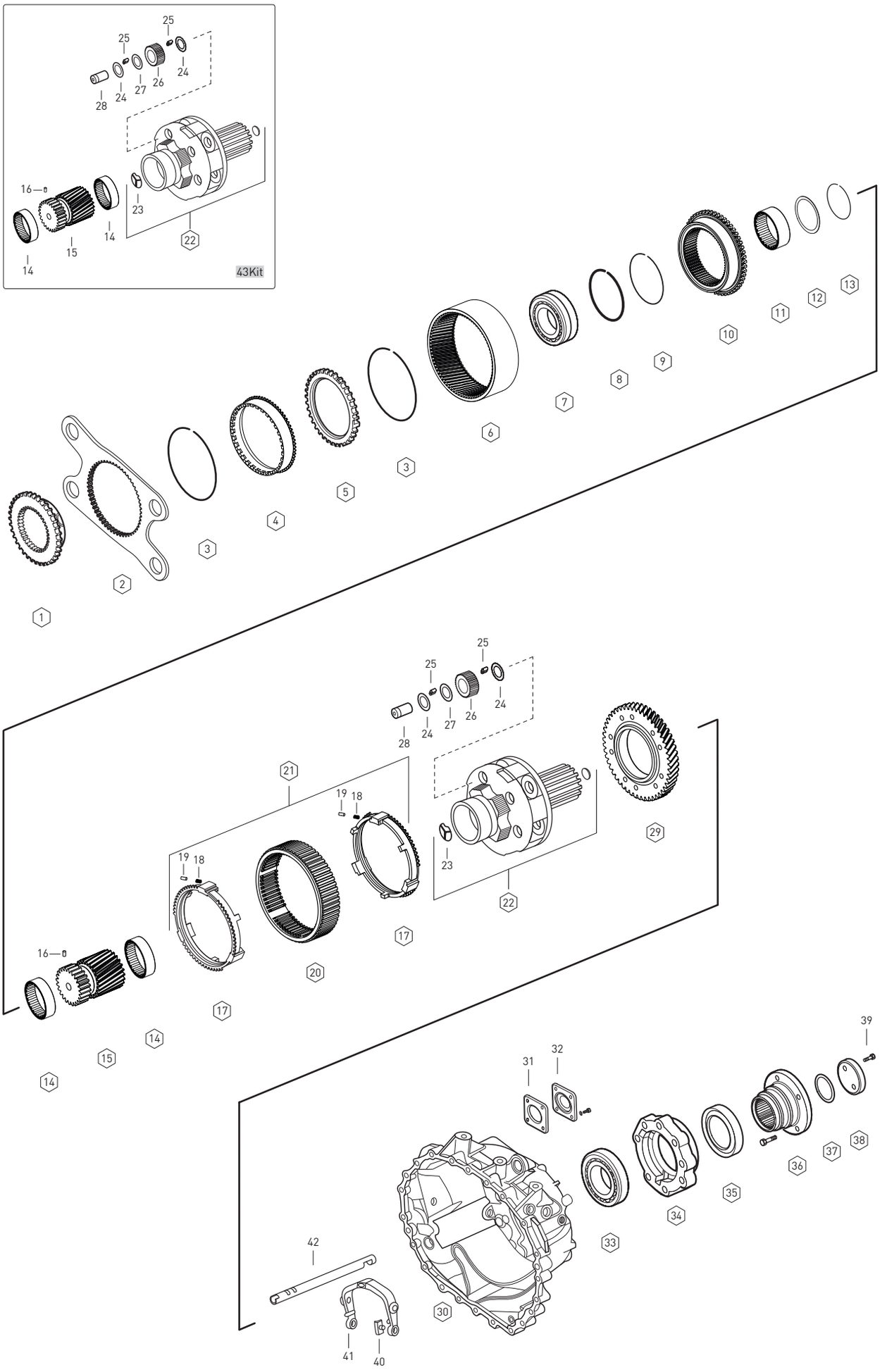

Original parts names, oem numbers, symbols and descriptions used in this catalogue are for reference purposes only.

Fig.	Kacmaz No.	Oem No	Oem Old No	Pcs.	Ürün Tanımı	Description	Sizes	(X1): 16 AS 2230 TD	(X2): 16 AS 2630 TO	(X3): 16 AS 2600 TO
32	K20.02109	1328 301 170		1	PTO BAĞLANTI KAPAĞI	COVER		◆	◆	◆
33	K20.01134	0750 116 394	(0750 116 002)	1	ŞANZIMAN ARKA BİLYA	ROLLER BEARING	90.0X160.0X30.0mm	◆	◆	◆
			(0635 304 904)							
34	K20.02110	1328 331 004		1	ŞANZ.ARKA BİLYA KAPAĞI	BEARING COVER		◆	◆	◆
35	K20.01022	0734 319 459	(0734 300 421)	1	ŞANZIMAN FLANŞ KEÇESİ	OIL SEAL	105.0X125.0X12/16mm	◆	◆	◆
36	K20.02111	1358 332 210		1	ŞANZIMAN FLANŞI	COMPANION FLANGE		◆	◆	◆
36	K20.02112	1358 332 226		1	ŞANZIMAN FLANŞI	COMPANION FLANGE		◆	◆	◆
37	K20.02113	0634 313 805		1	ŞANZIMAN FLANŞ ORİNGİ	O-RING	82.0X4.0mm	◆	◆	◆
38	K20.01681	1312 332 028		1	ŞANZIMAN FLANŞ VİDA PULU	WASHER		◆	◆	◆
39	K20.02114	0636 011 777		2	ŞANZIMAN FLANŞ VİDASI	SCREW	M12X60	◆	◆	◆
40	K20.02115	1328 334 004		2	AĞIR SERİ HİLAL PABUCU	SLIDING BLOCK		◆	◆	◆
41	K20.02116	1328 334 017		1	AĞIR SERİ HİLALİ	G-SHIFT FORK		◆	◆	◆
42	K20.02117	1327 334 009		1	AĞIR SERİ HİLAL MİLİ	ROD		◆	◆	◆
43	K20.02171	1358 232 202	(1358 232 201)	1	ŞANZIMAN HEYKELİ DOLU	PLANETARY CARRIER FULL		◆	◆	◆
			(1328 232 016)							

NOTES :

X1, X2, X3 are used in conjunction with the encoded parts.
(X1) : 16 AS 2230 TD - 16 AS 2231 TD
(X2) : 16 AS 2630 TO - 16 AS 2635 TO
(X3) : 16 AS 2600 TO - 16 AS 2601 TO

NOTLAR :

X1, X2, X3 ile kodlanan parçalar birlikte kullanılır.
(X1) : 16 AS 2230 TD - 16 AS 2231 TD
(X2) : 16 AS 2630 TO - 16 AS 2635 TO
(X3) : 16 AS 2600 TO - 16 AS 2601 TO

Original parts names, oem numbers, symbols and descriptions used in this catalogue are for reference purposes only.

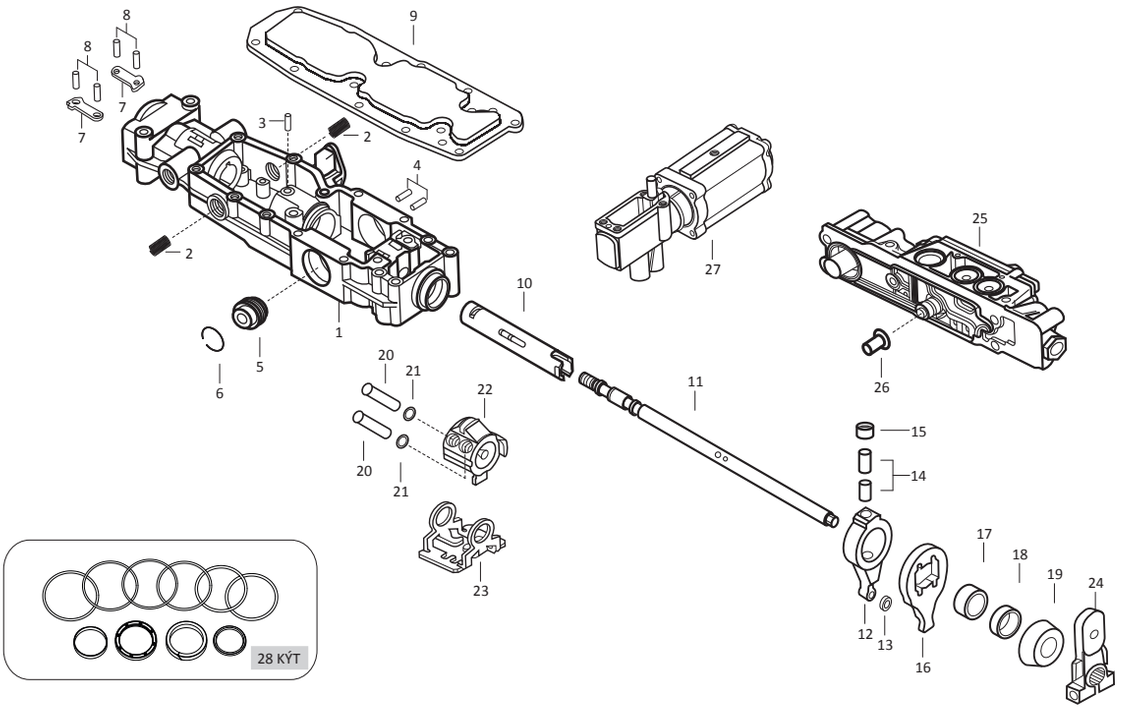

Fig.	Kacmaz No.	Oem No	Oem Old No	Pcs.	Ürün Tanımı	Description	
1		1315 307 383		1	KULE GÖVDESİ	G.SHIFT HOUSING	
2	K20.02175	0732 041 500		2	İSTİNAT YAYI	COMP.SPRING	
3	K20.02176	0731 201 702		1	KULE GÖVDE PİMİ	PIN	
4	K20.01459	0501 209 188		2	KULE TANE MASURA BİLYA	NEEDLE	
5	K20.00821	0501 209 212		1	İSTİNAT BİLYASI	DETENT	
6	K20.02177	0630 532 130		1	İSTİNAT BİLYA ORİNGİ	O-RING	
7	K20.02178	1315 307 203		2	KULE AĞIR SERİ İSTİNATLAMA	DETENT LEVER	
8	K20.02179	0631 306 832		4	KULE AĞIR SERİ İSTİNATLAMA PİMİ	CYLIN.PIN	H 8X20mm
9		1315 307 286		1	KULE ÜST KAPAK	COVER	
10	K20.00808	1315 307 294		1	VİTES KULE MİL BORUSU	QUILL SHAFT	
11	K20.00799	1315 307 376		1	VİTES KULE MİLİ	G.SHIFT SHAFT	
11		1315 307 327		1	VİTES KULE MİLİ	G.SHIFT SHAFT	
11	K20.00835	1315 307 264		1	VİTES KULE MİLİ	G.SHIFT SHAFT	
12	K20.01081	1315 307 287	(1316 208 002)	1	VİTES ATLATMA	VALVE LEVER	
13	K20.01082	1315 307 226		1	VİTES ATLATMA	ROLLER	
14	K20.02180	0731 201 732		2	VİTES KULE ATLATMA PİMİ	PIN	
15	K20.02181	0635 303 019		1	VİTES KULE ATLATMA BİLYASI	NEEDLE BUSH	
16	K20.02182	1315 307 292		1	VİTES ATLATMA	LEVER	
17	K20.01740	0730 260 703		1	VİTES KULE MİL BURCU	BUSH	38.5X28X13.50mm
18	K20.01038	0734 309 765	(0734 309 376)	1	VİTES KULE MİL KEÇESİ	SHAFT SEAL	28X42X11mm
19		1315 307 387		1	TAPA	PROTECTING CAP	
20	K20.00823	1316 208 003		2	VİTES KULE ARAYICI PİMİ	PIN	
21		0630 501 006		2	VİTES KULE ARAYICI PİM SEKMANI	RETAINING RING	10X1mm
22	K20.02183	1315 307 219		1	VİTES KULE ARAYICI	DRIVER	
22	K20.00836	1315 307 333		1	VİTES KULE ARAYICI	DRIVER	
23	K20.02184	1315 307 218		1	VİTES KULE ARAYICI SACI	LOCKING PIECE	
24		1315 307 299		1	KULE FREZE	G.SHIFT LEVER	
25		0501 219 311		1	TARAKLAMA VENTİLİ	VALVE BLOCK	
25		0501 219 315		1	TARAKLAMA VENTİLİ	VALVE BLOCK	
25		0501 219 314		1	TARAKLAMA VENTİLİ	VALVE BLOCK	
26	K20.00872	1315 307 404		1	TARAKLAMA VENTİL PİMİ	TAPPET	
27	K20.02185	0501 211 290		1	SERVO ÜNİTESİ	PNEUM.SERVO UNIT	
28	K20.01033	2001033		1	SERVO TAMİR TAKIMI	REPAIR KIT	

Original parts names, oem numbers, symbols and descriptions used in this catalogue are for reference purposes only.

NOTES / NOTLAR

Original parts names, oem numbers, symbols and descriptions used in this catalogue are for reference purposes only.

ARCTIC OCEAN
Arctic Ocean
Greenland
Canada
Russia
United States
China
India
Mexico
Caribbean Sea
PAIFIC OCEAN
ATLANTIC OCEAN
(NORTH ATLANTIC OCEAN)
(NORTH PACIFIC OCEAN)
Philippine Sea
Indonesia
INDIAN OCEAN
Australia
Brazil
(SOUTH PACIFIC OCEAN)
(SOUTH ATLANTIC OCEAN)
(SOUTHERN OCEAN)
KAÇMAZLAR

KAÇMAZLAR®
OTOMOTİV LTD. ŞTİ.
3.Organize San. Böl. İhsan Dede Cd. 9 Nolu Sk. No:25 KONYA/TÜRKİYE
Tel: +90.332. 239 13 72 (pbx) • Fax: +90.332. 239 13 76
www.kacmazlar.com • e-mail: kacmazlar@kacmazlar.com